Test Report issued under the responsibility of

Nemko

www.nemko.com

TEST REPORT

IEC 60950-1

Information technology equipment – Safety –

Part 1: General requirements

Report Number. .....:	**242467**
Date of issue.....:	2013-09-09
Total number of pages	46 pages, refer to page 3 for the List of attachments
CB Testing Laboratory.....:	**Nemko Shanghai Ltd.** Phone: +86 21 5445 3132
Address .....:	7th Floor, Building 1, No.2007 Hongmei Road Xuhui District, Shanghai, China
Applicant's name.....:	**GlobTek, Inc.**
Address .....:	186 Veterans Dr. Northvale, NJ 07647 USA
Manufacturer's name……..:	**GlobTek, Inc.**
Address .....:	186 Veterans Dr. Northvale, NJ 07647 USA
Test specification:	
Standard.....:	IEC 60950-1:2005 (2nd Edition); Am 1:2009
Test procedure .....:	CB Scheme
Non-standard test method……..:	N/A
Test Report Form No.....:	IEC60950_1C
Test Report Form(s) Originator.....:	SGS Fimko Ltd
Master TRF.....:	Dated 2012-08

Copyright © 2012 Worldwide System for Conformity Testing and Certification of Electrotechnical Equipment and Components (IECEE), Geneva, Switzerland. All rights reserved.

This publication may be reproduced in whole or in part for non-commercial purposes as long as the IECEE is acknowledged as copyright owner and source of the material. IECEE takes no responsibility for and will not assume liability for damages resulting from the reader's interpretation of the reproduced material due to its placement and context.

If this Test Report Form is used by non-IECEE members, the IECEE/IEC logo and the reference to the CB Scheme procedure shall be removed.

Test item description .....:	**5 BAY LITHIUM-ION BATTERY CHARGER or C5/F5-Series Multi-Bay Battery Charger**
Trade Mark .....:	GlobTek, Inc.
Manufacturer .....:	Same as applicant.
Model/Type reference.....:	GT-93023-12012; MBC-001
Ratings .....:	Input: 6.25A, 24VDC Output: 2.5A MAX PER BAY, 12.6VDC, total power for all bays 150W max

This Test Report, when bearing the Nemko name and logo is only valid when issued by a Nemko laboratory, or by a laboratory having special agreement with Nemko.

Testing procedure and testing location:		
☒	**CB Testing Laboratory**:	**Nemko Shanghai Ltd.**
Testing location/ address .....:		7th Floor, Building 1, No.2007 Hongmei Road Xuhui District, Shanghai, China
☐	**Associated CB Laboratory:**	
Testing location/ address .....:		
	Tested by (name + signature) .....:	William Guo
	Approved by (name + signature) .....:	Sam-Geun Gwack
☐	Testing procedure: **TMP**	
Testing location/ address .....:		
	Tested by (name + signature) .....:	
	Approved by (name + signature) .....:	
☐	Testing procedure: **WMT**	
Testing location/ address .....:		
	Tested by (name + signature) .....:	
	Witnessed by (name + signature) ....:	
	Approved by (name + signature) .....:	
☐	Testing procedure: **SMT**	
Testing location/ address .....:		
	Tested by (name + signature) .....:	
	Approved by (name + signature) .....:	
	Supervised by (name + signature) ...:	
☐	Testing procedure: **RMT**	
Testing location/ address .....:		
	Tested by (name + signature) .....:	
	Approved by (name + signature) .....:	
	Supervised by (name + signature) ...:	

List of Attachments (including a total number of pages in each attachment):
Attachment 1: Photos (3 pages) Attachment 2: European Group Differences and National Differences EN 60950 1:2006/A11:2009/A1:2010/A12:2011(17 pages). National Differences: Australia/ New Zealand (8 pages), Canada (5 pages), China (6 pages), Israel (4 pages), Japan (12 pages), Korea (1 page), Singapore (3 pages), USA (5 pages).

Summary of testing:	
Radio and television interference Suppression Compliance with the EMC directive is necessary for achieving type certification. The appliance shall comply with the relevant EMC standards, depending on the equipment in question. In NO, compliance with standards for radio interference suppression is a part of Nemko's certification. In FI, DK and SE compliance is not necessary for achieving safety certification.	EMC is based on self declaration according to EMC Directive 2004/108/EC.
1.5 External power supply	The equipment is a class III battery charger which supplied by an external approved adapter. The equipment can be used at altitude up to 5000m and max. ambient temperature 55℃. The optional power adaptors type GT-43004P15024-T3 and GT-43004P15024-T3A provided by the manufacturer can be used with the equipment at altitude up to 2000m and max. ambient temperature 40℃. Other external power adaptor was not evaluated as part of this report. The external power adaptor shall be certified according to IEC 60950-1:2005 (2nd Edition); Am1: 2009, rated DC 24V 6.25A output, has double / reinforced insulation between primary and secondary, has an operation altitude up to 5000m and max. ambient temperature 55℃.
1.6.2 Input current	The rated output of external adapter is DC 24V 6.25A; the rated battery to be charged is 11.1V, 4000mAh. The battery charger (EUT in this report) convert the output of external adapter to required charging voltage/current to the battery.Only battery pack specified by the EUT manufacturer can be used and the EUT cannot operates without the specific battery pack.
1.7.2.1 Language of safety markings/ instructions	Instructions and equipment marking related to safety is applied in the language that is acceptable in the country in which the equipment is to be sold.

Tests performed (name of test and test clause):	**Testing location:**
1.6.2; Input current 1.7.11; Durability test 4.5.1; Temperature test 5.3; Abnormal operation and fault conditions	Refer to page 2.

Summary of compliance with National Differences

List of countries addressed:

All CENELEC members as listed in EN 60950-1:2006/A11:2009/A1:2010/A12:2011.
All CB members listed in the IECEE Online Bulletin. The separate national deviation report for Australia/New Zealand, Canada, China, Israel, Japan, Korea, Singapore and USA attached in this test report. At the time of issuing this report, not all countries are listed for IEC 60950-1:2005 (ed.2, Am1:2009). Therefore this report includes National differences to IEC 60950-1:2001(ed.1).

☒ The product fulfils the requirements of IEC 60950-1:2005 (2nd Edition); Am1: 2009 and EN 60950-1:2006/A11:2009/A1:2010/A12:2011

Copy of marking plate

The artwork below may be only a draft. The use of certification marks on a product must be authorized by the respective NCBs that own these marks.

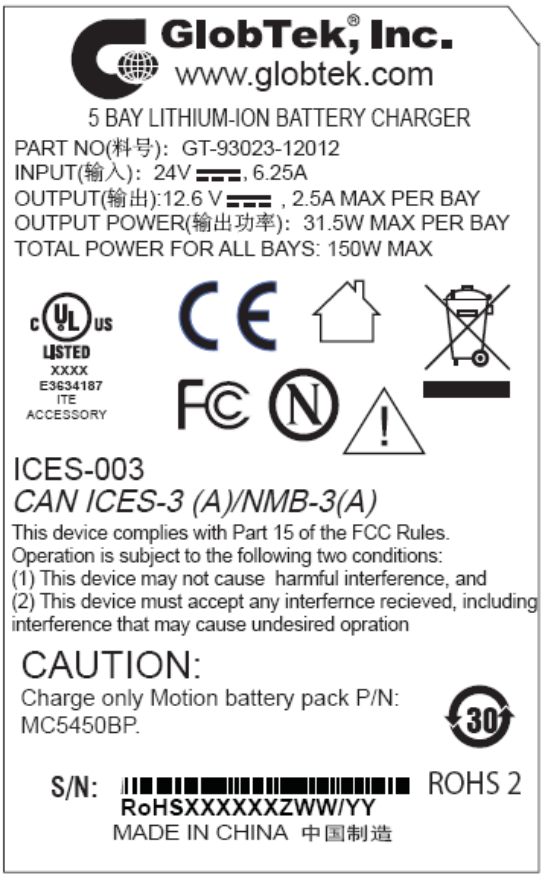

Representative all the models, difference only on model name.

Calibration:	All instruments used in the tests given in this test report are calibrated and traceable to national or international standards. Further information about traceability will be given on request.
Measurement uncertainty:	Measurement uncertainties are calculated for all instruments and instrument set-ups given in this report. Calculations are based on the principles given in the standard EA-4/02 (Dec. 1999), IEC Guide 115:2007, Nemko routine L227 and other relevant internal Nemko-procedures. Further information about measurement uncertainties will be given on request.
Evaluation of results:	If not explicitly stated otherwise in the standard, the test is passed if the measured value is equal to or below (above) the limit line, regardless of the measurement uncertainty. If the measured value is above (below) the limit line, the test is not passed - ref IEC Guide 115:2007, and Nemko routine L220. The instrumentation accuracy is within limits agreed by IECEE-CTL (ref. Nemko routine L227).

Test item particulars.....:	
Equipment mobility.....:	[X] movable [] hand-held [] transportable [] stationary [] for building-in [] direct plug-in
Connection to the mains .....:	[] pluggable equipment [] type A [] type B [] permanent connection [] detachable power supply cord [] non-detachable power supply cord [X] not directly connected to the mains
Operating condition.....:	[X] continuous [] rated operating / resting time:
Access location .....:	[X] operator accessible [] restricted access location
Over voltage category (OVC) .....:	[] OVC I [] OVC II [] OVC III [] OVC IV [X] other: Supplied by AC/DC adapter
Mains supply tolerance (%) or absolute mains supply values .....:	N/A
Tested for IT power systems .....:	[] Yes [X] No
IT testing, phase-phase voltage (V) .....:	N/A
Class of equipment .....:	[] Class I [] Class II [X] Class III [] Not classified
Considered current rating of protective device as part of the building installation (A) .....:	N/A
Pollution degree (PD) .....:	[] PD 1 [X] PD 2 [] PD 3
IP protection class .....:	IP20
Altitude during operation (m) .....:	Up to 5000m
Altitude of test laboratory (m) .....:	< 2000m
Mass of equipment (kg) .....:	1.075kg Dimensions (WHD): 370mm by 30mm by 175mm
Possible test case verdicts:	
- test case does not apply to the test object ..... :	N/A
- test object does meet the requirement..... :	P (Pass)
- test object does not meet the requirement..... :	F (Fail)
Testing..... :	
Date of receipt of test item ..... :	2013-08-12
Date(s) of performance of tests ..... :	2013-08-12 to 2013-08-15

General remarks:

The test results presented in this report relate only to the object tested.
This report shall not be reproduced, except in full, without the written approval of the Issuing testing laboratory.
"(see Enclosure #)" refers to additional information appended to the report.
"(see appended table)" refers to a table appended to the report.

Throughout this report a ☐ comma / ☒ point is used as the decimal separator.

Manufacturer's Declaration per sub-clause 6.2.5 of IECEE 02:	
The application for obtaining a CB Test Certificate includes more than one factory location and a declaration from the Manufacturer stating that the sample(s) submitted for evaluation is (are) representative of the products from each factory has been provided.....:	☒ Yes ☐ Not applicable
When differences exist; they shall be identified in the General product information section.	
Name and address of factory (ies) ..... :	1. GlobTek, Inc. 186 Veterans Dr. Northvale, NJ 07647 USA 2. GlobTek (Suzhou) Co., Ltd. Building 4, No. 76, Jin Ling East Rd., Suzhou Industrial Park, Suzhou,JiangSu 215021, China, Suzhou

General product information:

The equipment under tests is a Class III battery charger intended to charge Lithium Ion or Lithium Polymer battery pack.
Model GT-93023-12012 is identical with model MBC-001 except model name.

The equipment is provided with five bays for changing of battery packs, and powered from a separately certified external adapter. The power adapter/ battery charger is supplied with special DC-in connectors and shaped to fit together, see attached photos.
The optional power adaptors type GT-43004P15024-T3 and GT-43004P15024-T3A can be used with the equipment at altitude up to 2000m and max. ambient temperature 40℃.
Other external power adaptor was not evaluated as part of this report. The external power adaptor shall be certified according to IEC 60950-1:2005 (2nd Edition); Am1: 2009, rated DC 24V 6.25A output, has double / reinforced insulation between primary and secondary, has an operation altitude up to 5000m and max. ambient temperature 55℃ as specified in the user manual.

The equipment consists of secondary circuit contained in a fire enclosure (metal base chasis and top plastic cover). Two pieces of enclosure are secured by screws.

Normal load: Charging five Lithium Ion battery packs each rated 11.1Vdc, 4000mAh. (Manufacturer: Pegatron Corp; model name: MC5450BP).All test performed with the batteries even if there is rated output because the equipment will use with only the battery which marked on the marking label.
The battery packs used for this evaluation were provided by manufacturer and were not evaluated as part of this test report.

Circuit characteristics: The equipment contains secondary circuits (SELV).
Maximum recommended ambient (Tma): 55°C.

1.1.2 – Additional requirements:
Exposure to extreme temperatures, excessive dust, moisture or vibration; to flammable gases; to corrosive or explosive atmospheres:
This equipment is intended to operate in a "normal" environment (Offices and homes).

Electromedical equipment connected to the patient:
This equipment is not an electromedical equipment intended to be physically connected to a patient.

Equipment used in vehicles, ships or aircrafts, in tropical countries, or at elevations > 2000m:
This equipment is intended to operate in an altitude up to 5000m.

Abbreviations used in the report:

- normal conditions	N.C.	- single fault conditions	S.F.C
- functional insulation	FI	- basic insulation	BI
- double insulation	DI	- supplementary insulation	SI
- between parts of opposite polarity	BOP	- reinforced insulation	RI

Indicate used abbreviations (if any)

IEC 60950-1			
Clause	Requirement + Test	Result - Remark	Verdict

1	**GENERAL**		P

1.5	**Components**		P
1.5.1	General	Refer below.	P
	Comply with IEC 60950-1 or relevant component standard	(see appended tables 1.5.1)	P
1.5.2	Evaluation and testing of components	Certified components are used in accordance with their ratings, certifications and they comply with applicable parts of this standard. Components not certified are used in accordance with their ratings and they comply with applicable parts of IEC 60950-1 and the relevant component standard. Components, for which no relevant IEC-standard exists, have been tested under the conditions occurring in the equipment, using applicable parts of IEC 60950-1.	P
1.5.3	Thermal controls	No thermal controls.	N/A
1.5.4	Transformers	No isolating transformer in the equipment.	N/A
1.5.5	Interconnecting cables	No interconnecting cables.	N/A
1.5.6	Capacitors bridging insulation	No capacitor bridging insulation.	N/A
1.5.7	Resistors bridging insulation	No such components bridging double or reinforced insulation.	N/A
1.5.7.1	Resistors bridging functional, basic or supplementary insulation		N/A
1.5.7.2	Resistors bridging double or reinforced insulation between a.c. mains and other circuits		N/A
1.5.7.3	Resistors bridging double or reinforced insulation between a.c. mains and antenna or coaxial cable		N/A
1.5.8	Components in equipment for IT power systems	Class III equipment. Not directly connected to the mains.	N/A
1.5.9	Surge suppressors	No such device.	N/A
1.5.9.1	General		N/A

IEC 60950-1			
Clause	Requirement + Test	Result - Remark	Verdict
1.5.9.2	Protection of VDRs		N/A
1.5.9.3	Bridging of functional insulation by a VDR		N/A
1.5.9.4	Bridging of basic insulation by a VDR		N/A
1.5.9.5	Bridging of supplementary, double or reinforced insulation by a VDR		N/A
1.6	**Power interface**		P
1.6.1	AC power distribution systems	Class III equipment.	N/A
1.6.2	Input current	(see appended table 1.6.2)	P
1.6.3	Voltage limit of hand-held equipment	Not hand-held equipment	N/A
1.6.4	Neutral conductor	Class III equipment	N/A
1.7	**Marking and instructions**		P
1.7.1	Power rating and identification markings	The required marking is located on the opterator access area	P
1.7.1.1	Power rating marking		P
	Multiple mains supply connections.....:		N/A
	Rated voltage(s) or voltage range(s) (V) .....:	24V	P
	Symbol for nature of supply, for d.c. only .....:	⎓ used	P
	Rated frequency or rated frequency range (Hz) ....:		N/A
	Rated current (mA or A) .....:	6.25A	P
1.7.1.2	Identification markings	Refer below	P
	Manufacturer's name or trade-mark or identification mark .....:	GlobTek® Inc.	P
	Model identification or type reference .....:	GT-93023-12012; MBC-001	P
	Symbol for Class II equipment only .....:	Class III equipment.	N/A
	Other markings and symbols .....:	The additional marking does not give rise to misunderstandings.	P
1.7.2	Safety instructions and marking	Refer below.	P
1.7.2.1	General	Refer below.	N/A
1.7.2.2	Disconnect devices	Class III equipment.	N/A
1.7.2.3	Overcurrent protective device	No such device.	N/A
1.7.2.4	IT power distribution systems	Class III equipment.	N/A
1.7.2.5	Operator access with a tool		N/A

IEC 60950-1			
Clause	Requirement + Test	Result - Remark	Verdict
1.2.7.6	Ozone	The equipment does not produce ozone.	N/A
1.7.3	Short duty cycles	The equipment is intended for continuous operation.	N/A
1.7.4	Supply voltage adjustment .....:	No voltage selector.	N/A
	Methods and means of adjustment; reference to installation instructions .....:		N/A
1.7.5	Power outlets on the equipment .....:	No standard power outlets in the equipment.	N/A
1.7.6	Fuse identification (marking, special fusing characteristics, cross-reference) .....:	The equipment is regarded as Class III.	N/A
1.7.7	Wiring terminals	Class III equipment.	N/A
1.7.7.1	Protective earthing and bonding terminals .....:		N/A
1.7.7.2	Terminals for a.c. mains supply conductors		N/A
1.7.7.3	Terminals for d.c. mains supply conductors		N/A
1.7.8	Controls and indicators	Refer below.	P
1.7.8.1	Identification, location and marking .....:	No function of controls affecting safety.	N/A
1.7.8.2	Colours .....:	For functional indication LEDs light when the equipment is operating.	P
1.7.8.3	Symbols according to IEC 60417.....:	No such symbol used.	N/A
1.7.8.4	Markings using figures .....:	No controls use figures.	N/A
1.7.9	Isolation of multiple power sources .....:	Class III equipment.	N/A
1.7.10	Thermostats and other regulating devices .....:	No such device.	N/A
1.7.11	Durability	The marking withstands required tests.	P
1.7.12	Removable parts	No marking is placed on removable parts.	P
1.7.13	Replaceable batteries .....:	No replaceable batteries.	N/A
	Language(s) .....:		—
1.7.14	Equipment for restricted access locations.....:	Equipment not intended for installation in RAL.	N/A

2	**PROTECTION FROM HAZARDS**		P
2.1	Protection from electric shock and energy hazards		N/A
2.1.1	Protection in operator access areas	Refer below.	N/A

IEC 60950-1			
Clause	Requirement + Test	Result - Remark	Verdict
2.1.1.1	Access to energized parts	Class III equipment, SELV circuit only.	N/A
	Test by inspection ..... :		N/A
	Test with test finger (Figure 2A) ..... :		N/A
	Test with test pin (Figure 2B) ..... :		N/A
	Test with test probe (Figure 2C) ..... :		N/A
2.1.1.2	Battery compartments	No TNV circuits.	N/A
2.1.1.3	Access to ELV wiring	No ELV circuits.	N/A
	Working voltage (Vpeak or Vrms); minimum distance through insulation (mm)		—
2.1.1.4	Access to hazardous voltage circuit wiring	No hazardous voltage circuit wiring.	N/A
2.1.1.5	Energy hazards ..... :	No energy hazard in operator access area.	N/A
2.1.1.6	Manual controls	No shafts of knobs etc.	N/A
2.1.1.7	Discharge of capacitors in equipment		N/A
	Measured voltage (V); time-constant (s) ..... :		—
2.1.1.8	Energy hazards – d.c. mains supply		N/A
	a) Capacitor connected to the d.c. mains supply .. :		N/A
	b) Internal battery connected to the d.c. mains supply ..... :		N/A
2.1.1.9	Audio amplifiers ..... :	No Audio amplifier.	N/A
2.1.2	Protection in service access areas	Class III equipment, no hazardous bare parts inside.	N/A
2.1.3	Protection in restricted access locations	Equipment not intended for installation in RAL.	N/A

2.2	**SELV circuits**		P
2.2.1	General requirements	The unit is supplied by SELV circuit.	P
2.2.2	Voltages under normal conditions (V) ..... :	Within SELV limits.	P
2.2.3	Voltages under fault conditions (V) ..... :	Within SELV limits.	P
2.2.4	Connection of SELV circuits to other circuits ..... :	SELV circuits are only connected to other SELV circuits.	P

2.3	**TNV circuits**	N/A

IEC 60950-1			
Clause	Requirement + Test	Result - Remark	Verdict
2.3.1	Limits	No TNV circuits.	N/A
	Type of TNV circuits..... :		—
2.3.2	Separation from other circuits and from accessible parts		N/A
2.3.2.1	General requirements		N/A
2.3.2.2	Protection by basic insulation		N/A
2.3.2.3	Protection by earthing		N/A
2.3.2.4	Protection by other constructions ..... :		N/A
2.3.3	Separation from hazardous voltages		N/A
	Insulation employed ..... :		—
2.3.4	Connection of TNV circuits to other circuits		N/A
	Insulation employed ..... :		—
2.3.5	Test for operating voltages generated externally		N/A
2.4	**Limited current circuits**		P
2.4.1	General requirements	No Limited current circuits.	N/A
2.4.2	Limit values		N/A
	Frequency (Hz)..... :		—
	Measured current (mA) ..... :		—
	Measured voltage (V)..... :		—
	Measured circuit capacitance (nF or µF) ..... :		—
2.4.3	Connection of limited current circuits to other circuits		N/A
2.5	**Limited power sources**		N/A
	a) Inherently limited output	No limited power sources.	N/A
	b) Impedance limited output		N/A
	c) Regulating network limited output under normal operating and single fault condition		N/A
	d) Overcurrent protective device limited output		N/A
	Max. output voltage (V), max. output current (A), max. apparent power (VA) ..... :		—
	Current rating of overcurrent protective device (A) .:		—
	Use of integrated circuit (IC) current limiters		—

IEC 60950-1			
Clause	Requirement + Test	Result - Remark	Verdict

2.6	**Provisions for earthing and bonding**		N/A
2.6.1	Protective earthing	2.6.1 – 2.6.5.7 Class III equipment.	N/A
2.6.2	Functional earthing		N/A
2.6.3	Protective earthing and protective bonding conductors		N/A
2.6.3.1	General		N/A
2.6.3.2	Size of protective earthing conductors		N/A
	Rated current (A), cross-sectional area (mm^2), AWG ..... :		—
2.6.3.3	Size of protective bonding conductors		N/A
	Rated current (A), cross-sectional area (mm^2), AWG ..... :		—
	Protective current rating (A), cross-sectional area (mm^2), AWG..... :		
2.6.3.4	Resistance of earthing conductors and their terminations; resistance (Ω), voltage drop (V), test current (A), duration (min)..... :		N/A
2.6.3.5	Colour of insulation ..... :		N/A
2.6.4	Terminals		N/A
2.6.4.1	General		N/A
2.6.4.2	Protective earthing and bonding terminals		N/A
	Rated current (A), type, nominal thread diameter (mm)..... :		—
2.6.4.3	Separation of the protective earthing conductor from protective bonding conductors		N/A
2.6.5	Integrity of protective earthing		N/A
2.6.5.1	Interconnection of equipment		N/A
2.6.5.2	Components in protective earthing conductors and protective bonding conductors		N/A
2.6.5.3	Disconnection of protective earth		N/A
2.6.5.4	Parts that can be removed by an operator		N/A
2.6.5.5	Parts removed during servicing		N/A
2.6.5.6	Corrosion resistance		N/A
2.6.5.7	Screws for protective bonding		N/A
2.6.5.8	Reliance on telecommunication network or cable distribution system	No TNV circuit.	N/A

IEC 60950-1			
Clause	Requirement + Test	Result - Remark	Verdict

2.7	**Overcurrent and earth fault protection in primary circuits**		N/A
2.7.1	Basic requirements	Class III equipment.	N/A
	Instructions when protection relies on building installation		N/A
2.7.2	Faults not simulated in 5.3.7		N/A
2.7.3	Short-circuit backup protection		N/A
2.7.4	Number and location of protective devices ..... :		N/A
2.7.5	Protection by several devices		N/A
2.7.6	Warning to service personnel ..... :		N/A

2.8	**Safety interlocks**		N/A
2.8.1	General principles	No safety interlocks.	N/A
2.8.2	Protection requirements		N/A
2.8.3	Inadvertent reactivation		N/A
2.8.4	Fail-safe operation		N/A
	Protection against extreme hazard		N/A
2.8.5	Moving parts		N/A
2.8.6	Overriding		N/A
2.8.7	Switches, relays and their related circuits		N/A
2.8.7.1	Separation distances for contact gaps and their related circuits (mm) ..... :		N/A
2.8.7.2	Overload test		N/A
2.8.7.3	Endurance test		N/A
2.8.7.4	Electric strength test		N/A
2.8.8	Mechanical actuators		N/A

2.9	**Electrical insulation**		N/A
2.9.1	Properties of insulating materials	Class III equipment.	N/A
2.9.2	Humidity conditioning		N/A
	Relative humidity (%), temperature (°C) ..... :		—
2.9.3	Grade of insulation		N/A
2.9.4	Separation from hazardous voltages		N/A
	Method(s) used ..... :		—

IEC 60950-1			
Clause	Requirement + Test	Result - Remark	Verdict

2.10	**Clearances, creepage distances and distances through insulation**		N/A
2.10.1	General	Class III equipment. Only functional insulation is considered.	N/A
2.10.1.1	Frequency ..... :		N/A
2.10.1.2	Pollution degrees ..... :		N/A
2.10.1.3	Reduced values for functional insulation		N/A
2.10.1.4	Intervening unconnected conductive parts		N/A
2.10.1.5	Insulation with varying dimensions		N/A
2.10.1.6	Special separation requirements		N/A
2.10.1.7	Insulation in circuits generating starting pulses		N/A
2.10.2	Determination of working voltage		N/A
2.10.2.1	General		N/A
2.10.2.2	RMS working voltage		N/A
2.10.2.3	Peak working voltage		N/A
2.10.3	Clearances		N/A
2.10.3.1	General		N/A
2.10.3.2	Mains transient voltages		N/A
	a) AC mains supply ..... :		N/A
	b) Earthed d.c. mains supplies ..... :		N/A
	c) Unearthed d.c. mains supplies ..... :		N/A
	d) Battery operation ..... :		N/A
2.10.3.3	Clearances in primary circuits		N/A
2.10.3.4	Clearances in secondary circuits		N/A
2.10.3.5	Clearances in circuits having starting pulses		N/A
2.10.3.6	Transients from a.c. mains supply ..... :		N/A
2.10.3.7	Transients from d.c. mains supply ..... :		N/A
2.10.3.8	Transients from telecommunication networks and cable distribution systems ..... :		N/A
2.10.3.9	Measurement of transient voltage levels		N/A
	a) Transients from a mains supply		N/A
	For an a.c. mains supply ..... :		N/A
	For a d.c. mains supply ..... :		N/A
	b) Transients from a telecommunication network :		N/A

IEC 60950-1			
Clause	Requirement + Test	Result - Remark	Verdict
2.10.4	Creepage distances		N/A
2.10.4.1	General		N/A
2.10.4.2	Material group and comparative tracking index		N/A
	CTI tests ..... :		—
2.10.4.3	Minimum creepage distances		N/A
2.10.5	**Solid insulation**		N/A
2.10.5.1	General		N/A
2.10.5.2	Distances through insulation		N/A
2.10.5.3	Insulating compound as solid insulation		N/A
2.10.5.4	Semiconductor devices		N/A
2.10.5.5.	Cemented joints		N/A
2.10.5.6	Thin sheet material – General		N/A
2.10.5.7	Separable thin sheet material		N/A
	Number of layers (pcs) ..... :		—
2.10.5.8	Non-separable thin sheet material		N/A
2.10.5.9	Thin sheet material – standard test procedure		N/A
	Electric strength test		—
2.10.5.10	Thin sheet material – alternative test procedure		
	Electric strength test		—
2.10.5.11	Insulation in wound components		N/A
2.10.5.12	Wire in wound components		—
	Working voltage ..... :		N/A
	a) Basic insulation not under stress ..... :		N/A
	b) Basic, supplementary, reinforced insulation ..... :		N/A
	c) Compliance with Annex U ..... :		N/A
	Two wires in contact inside wound component; angle between 45° and 90° ..... :		N/A
2.10.5.13	Wire with solvent-based enamel in wound components		N/A
	Electric strength test		—
	Routine test		N/A
2.10.5.14	Additional insulation in wound components		N/A
	Working voltage ..... :		N/A
	- Basic insulation not under stress ..... :		N/A

IEC 60950-1			
Clause	Requirement + Test	Result - Remark	Verdict
	- Supplementary, reinforced insulation ..... :		N/A
2.10.6	**Construction of printed boards**		N/A
2.10.6.1	Uncoated printed boards		N/A
2.10.6.2	Coated printed boards		N/A
2.10.6.3	Insulation between conductors on the same inner surface of a printed board		N/A
2.10.6.4	Insulation between conductors on different layers of a printed board		N/A
	Distance through insulation		N/A
	Number of insulation layers (pcs)..... :		N/A
2.10.7	**Component external terminations**		N/A
2.10.8	Tests on coated printed boards and coated components		N/A
2.10.8.1	Sample preparation and preliminary inspection		N/A
2.10.8.2	Thermal conditioning		N/A
2.10.8.3	Electric strength test		N/A
2.10.8.4	Abrasion resistance test		N/A
2.10.9	Thermal cycling		N/A
2.10.10	Test for Pollution Degree 1 environment and insulating compound		N/A
2.10.11	Tests for semiconductor devices and cemented joints		N/A
2.10.12	Enclosed and sealed parts		N/A

3	**WIRING, CONNECTIONS AND SUPPLY**		P
3.1	General		N/A
3.1.1	Current rating and overcurrent protection	No internal wiring and interconnection cables.	N/A
3.1.2	Protection against mechanical damage		N/A
3.1.3	Securing of internal wiring		N/A
3.1.4	Insulation of conductors	Not applicable.	N/A
3.1.5	Beads and ceramic insulators	No beads or similar ceramic insulators on conductors.	N/A
3.1.6	Screws for electrical contact pressure	No electrical screw connections.	N/A
3.1.7	Insulating materials in electrical connections	Class III equipment.	N/A

IEC 60950-1			
Clause	Requirement + Test	Result - Remark	Verdict
3.1.8	Self-tapping and spaced thread screws	Thread-cutting or space thread screws are not used for electrical connections.	N/A
3.1.9	Termination of conductors	Class III equipment.	N/A
	10 N pull test		N/A
3.1.10	Sleeving on wiring	No sleeving.	N/A
3.2	**Connection to a mains supply**		N/A
3.2.1	Means of connection	Class III equipment. No direct connection to the mains supply.	N/A
3.2.1.1	Connection to an a.c. mains supply		N/A
3.2.1.2	Connection to a d.c. mains supply		N/A
3.2.2	Multiple supply connections		N/A
3.2.3	Permanently connected equipment		N/A
	Number of conductors, diameter of cable and conduits (mm) .....:		—
3.2.4	Appliance inlets		N/A
3.2.5	Power supply cords		N/A
3.2.5.1	AC power supply cords		N/A
	Type .....:		—
	Rated current (A), cross-sectional area (mm^2), AWG .....:		—
3.2.5.2	DC power supply cords		N/A
3.2.6	Cord anchorages and strain relief		N/A
	Mass of equipment (kg), pull (N) .....:		—
	Longitudinal displacement (mm) .....:		—
3.2.7	Protection against mechanical damage		N/A
3.2.8	Cord guards		N/A
	Diameter or minor dimension D (mm); test mass (g) .....:		—
	Radius of curvature of cord (mm) .....:		—
3.2.9	Supply wiring space		N/A
3.3	**Wiring terminals for connection of external conductors**		N/A

IEC 60950-1			
Clause	Requirement + Test	Result - Remark	Verdict
3.3.1	Wiring terminals	Class III equipment. No direct connection to mains.	N/A
3.3.2	Connection of non-detachable power supply cords		N/A
3.3.3	Screw terminals		N/A
3.3.4	Conductor sizes to be connected		N/A
	Rated current (A), cord/cable type, cross-sectional area (mm^2) ..... :		—
3.3.5	Wiring terminal sizes		N/A
	Rated current (A), type, nominal thread diameter (mm) ..... :		—
3.3.6	Wiring terminal design		N/A
3.3.7	Grouping of wiring terminals		N/A
3.3.8	Stranded wire		N/A
3.4	**Disconnection from the mains supply**		N/A
3.4.1	General requirement	Class III equipment. No direct connection to mains.	N/A
3.4.2	Disconnect devices		N/A
3.4.3	Permanently connected equipment		N/A
3.4.4	Parts which remain energized		N/A
3.4.5	Switches in flexible cords		N/A
3.4.6	Number of poles - single-phase and d.c. equipment		N/A
3.4.7	Number of poles - three-phase equipment		N/A
3.4.8	Switches as disconnect devices		N/A
3.4.9	Plugs as disconnect devices		N/A
3.4.10	Interconnected equipment		N/A
3.4.11	Multiple power sources		N/A
3.5	**Interconnection of equipment**		P
3.5.1	General requirements	Considered.	P
3.5.2	Types of interconnection circuits ..... :	SELV circuit	P
3.5.3	ELV circuits as interconnection circuits	No ELV interconnections.	N/A
3.5.4	Data ports for additional equipment	No data ports.	N/A

IEC 60950-1			
Clause	Requirement + Test	Result - Remark	Verdict

4	**PHYSICAL REQUIREMENTS**		P
4.1	Stability		N/A
	Angle of 10°	<7kg	N/A
	Test force (N) ..... :	The equipment is not floor-standing.	N/A

4.2	**Mechanical strength**		N/A
4.2.1	General		N/A
	Rack-mounted equipment.	Not Rack-mounted equipment.	N/A
4.2.2	Steady force test, 10 N	Class III equipment, no hazardous voltage inside.	N/A
4.2.3	Steady force test, 30 N	Class III equipment, no hazardous voltage inside.	N/A
4.2.4	Steady force test, 250 N	Class III equipment, no hazardous voltage inside.	N/A
4.2.5	Impact test	Refer below:	N/A
	Fall test	Class III equipment, no hazardous voltage inside.	N/A
	Swing test	Class III equipment, no hazardous voltage inside.	N/A
4.2.6	Drop test; height (mm) ..... :	Drop test not applicable.	N/A
4.2.7	Stress relief test	Class III equipment.	N/A
4.2.8	Cathode ray tubes	No such device.	N/A
	Picture tube separately certified ..... :		N/A
4.2.9	High pressure lamps	No high pressure lamp.	N/A
4.2.10	Wall or ceiling mounted equipment; force (N) ..... :	Not intended to be mounted on wall or ceiling.	N/A
4.2.11	Rotating solid media	No such device.	N/A
	Test to cover on the door……..:		N/A

4.3	**Design and construction**		P
4.3.1	Edges and corners	All edges and corners are rounded and/or smoothed.	P
4.3.2	Handles and manual controls; force (N) .....:	No knobs, grips, handles, lever etc.	N/A
4.3.3	Adjustable controls	No hazardous adjustable control.	N/A

IEC 60950-1			
Clause	Requirement + Test	Result - Remark	Verdict
4.3.4	Securing of parts	Class III equipment.	N/A
4.3.5	Connection by plugs and sockets	SELV connectors do not comply with IEC 60320 or IEC 60083.	P
4.3.6	Direct plug-in equipment	Not direct plug-in equipment.	N/A
	Torque ..... :		—
	Compliance with the relevant mains plug standard ..... :		N/A
4.3.7	Heating elements in earthed equipment	No heating elements provided.	N/A
4.3.8	Batteries	No batteries in the equipment.	N/A
	- Overcharging of a rechargeable battery		N/A
	- Unintentional charging of a non-rechargeable battery		N/A
	- Reverse charging of a rechargeable battery		N/A
	- Excessive discharging rate for any battery		N/A
4.3.9	Oil and grease	Insulation is not exposed to oil, grease etc.	N/A
4.3.10	Dust, powders, liquids and gases	The equipment does not produce dust or powders, and does not contain flammable liquids or gases.	N/A
4.3.11	Containers for liquids or gases	No container for liquids or gases.	N/A
4.3.12	Flammable liquids ..... :	The equipment does not contain flammable liquid.	N/A
	Quantity of liquid (l) ..... :		N/A
	Flash point (°C) ..... :		N/A
4.3.13	Radiation	The equipment does not generate ionizing radiation, and does not contain flammable liquids or gases.	N/A
4.3.13.1	General		N/A
4.3.13.2	Ionizing radiation		N/A
	Measured radiation (pA/kg) ..... :		—
	Measured high-voltage (kV) ..... :		—
	Measured focus voltage (kV) ..... :		—
	CRT markings ..... :		—

IEC 60950-1			
Clause	Requirement + Test	Result - Remark	Verdict
4.3.13.3	Effect of ultraviolet (UV) radiation on materials	The equipment does not produce UV radiation.	N/A
	Part, property, retention after test, flammability classification ..... :		N/A
4.3.13.4	Human exposure to ultraviolet (UV) radiation ..... :	The equipment does not produce UV radiation.	N/A
4.3.13.5	Lasers (including laser diodes) and LEDs	Refer below.	P
4.3.13.5.1	Lasers (including laser diodes)	No laser.	N/A
	Laser class ..... :		—
4.3.13.5.2	Light emitting diodes (LEDs)	Indicatind LED is diffused type, no test necessary.	P
4.3.13.6	Other types ..... :	The equipment does not generate other types of radiation.	N/A
4.4	**Protection against hazardous moving parts**		N/A
4.4.1	General	No moving parts.	N/A
4.4.2	Protection in operator access areas ..... :		N/A
	Household and home/office document/media shredders	Not such equipment.	N/A
4.4.3	Protection in restricted access locations ..... :	Not intended for installation in RAL.	N/A
4.4.4	Protection in service access areas	No moving parts.	N/A
4.4.5	Protection against moving fan blades	No such part.	N/A
4.4.5.1	General		N/A
	Not considered to cause pain or injury. a)……..:		N/A
	Is considered to cause pain, not injury. b) ……:		N/A
	Considered to cause injury. c) ……:		N/A
4.4.5.2	Protection for users		N/A
	Use of symbol or warning ……:		N/A
4.4.5.3	Protection for service persons		N/A
	Use of symbol or warning ……:		N/A
4.5	**Thermal requirements**		P
4.5.1	General	Refer below.	P
4.5.2	Temperature tests	(see appended table 4.5)	P

IEC 60950-1			
Clause	Requirement + Test	Result - Remark	Verdict
	Normal load condition per Annex L .....:	Rated load with continuous operation, refer to General product information.	—
4.5.3	Temperature limits for materials	(see appended table 4.5)	P
4.5.4	Touch temperature limits	(see appended table 4.5)	P
4.5.5	Resistance to abnormal heat .....:	No thermoplastic parts carrying hazardous voltages.	N/A
4.6	**Openings in enclosures**		P
4.6.1	Top and side openings	Class III equipment. No top and side openings.	N/A
	Dimensions (mm) .....:		—
4.6.2	Bottoms of fire enclosures	No bottom opening.	P
	Construction of the bottom, dimensions (mm) .....:		—
4.6.3	Doors or covers in fire enclosures	No doors or cover in fire enclosure.	N/A
4.6.4	Openings in transportable equipment	The equipment is not regarded as transportable equipment.	N/A
4.6.4.1	Constructional design measures		N/A
	Dimensions (mm) .....:		—
4.6.4.2	Evaluation measures for larger openings		N/A
4.6.4.3	Use of metallized parts		N/A
4.6.5	Adhesives for constructional purposes	No barrier secured by adhesive inside enclosure.	N/A
	Conditioning temperature (°C), time (weeks).....:		—
4.7	**Resistance to fire**		P
4.7.1	Reducing the risk of ignition and spread of flame	Method 1 is used.	P
	Method 1, selection and application of components wiring and materials	(see appended table 1.5.1)	P
	Method 2, application of all of simulated fault condition tests	Not used.	N/A
4.7.2	Conditions for a fire enclosure	Refer below.	P
4.7.2.1	Parts requiring a fire enclosure	The fire enclosure is required to cover all parts.	P
4.7.2.2	Parts not requiring a fire enclosure	The fire enclosure is required to cover all parts.	N/A

IEC 60950-1			
Clause	Requirement + Test	Result - Remark	Verdict

4.7.3	Materials		P
4.7.3.1	General	Components and materials have adequate flammability classification. (see appended table 1.5.1)	P
4.7.3.2	Materials for fire enclosures	The fire enclosure is of metal, min V-1 plastic material.	P
4.7.3.3	Materials for components and other parts outside fire enclosures	No parts outside the fire enclosure.	N/A
4.7.3.4	Materials for components and other parts inside fire enclosures	Other materials inside fire enclosure are minimum V-2 material.	P
4.7.3.5	Materials for air filter assemblies	No air filter.	N/A
4.7.3.6	Materials used in high-voltage components	No part exceeding 4kV.	N/A

5	**ELECTRICAL REQUIREMENTS AND SIMULATED ABNORMAL CONDITIONS**		N/A
5.1	**Touch current and protective conductor current**		N/A
5.1.1	General	Class III equipment. Unit is not intended for direct connection to a mains supply. No test considered necessary.	N/A
5.1.2	Configuration of equipment under test (EUT)		N/A
5.1.2.1	Single connection to an a.c. mains supply		N/A
5.1.2.2	Redundant multiple connections to an a.c. mains supply		N/A
5.1.2.3	Simultaneous multiple connections to an a.c. mains supply		N/A
5.1.3	Test circuit		N/A
5.1.4	Application of measuring instrument		N/A
5.1.5	Test procedure		N/A
5.1.6	Test measurements		N/A
	Supply voltage (V) .....:		—
	Measured touch current (mA) .....:		—
	Max. allowed touch current (mA) .....:		—
	Measured protective conductor current (mA) .....:		—
	Max. allowed protective conductor current (mA)...:		—
5.1.7	Equipment with touch current exceeding 3,5 mA		N/A

IEC 60950-1			
Clause	Requirement + Test	Result - Remark	Verdict
5.1.7.1	General ..... :		N/A
5.1.7.2	Simultaneous multiple connections to the supply		N/A
5.1.8	Touch currents to telecommunication networks and cable distribution systems and from telecommunication networks	No TNV circuitry.	N/A
5.1.8.1	Limitation of the touch current to a telecommunication network or to a cable distribution system		N/A
	Supply voltage (V) ..... :		—
	Measured touch current (mA) ..... :		—
	Max. allowed touch current (mA) ..... :		—
5.1.8.2	Summation of touch currents from telecommunication networks		N/A
	a) EUT with earthed telecommunication ports ..... :		N/A
	b) EUT whose telecommunication ports have no reference to protective earth		N/A
5.2	**Electric strength**		N/A
5.2.1	General	Class III equipment.	N/A
5.2.2	Test procedure		N/A
5.3	**Abnormal operating and fault conditions**		P
5.3.1	Protection against overload and abnormal operation		N/A
5.3.2	Motors	There are no motors in the equipment.	N/A
5.3.3	Transformers	No isolating transformer.	N/A
5.3.4	Functional insulation..... :	Complies with c).	P
5.3.5	Electromechanical components		N/A
5.3.6	Audio amplifiers in ITE ..... :	No audio amplifier.	N/A
5.3.7	Simulation of faults	Fault condition of charging control circuit performed, see appended table 5.3.	P
5.3.8	Unattended equipment		N/A
5.3.9	Compliance criteria for abnormal operating and fault conditions		P

IEC 60950-1			
Clause	Requirement + Test	Result - Remark	Verdict
5.3.9.1	During the tests	No fire or molten metal occurred and no deformation of enclosure.	P
5.3.9.2	After the tests		P
6	**CONNECTION TO TELECOMMUNICATION NETWORKS**		N/A
6.1	Protection of telecommunication network service persons, and users of other equipment connected to the network, from hazards in the equipment		N/A
6.1.1	Protection from hazardous voltages		N/A
6.1.2	Separation of the telecommunication network from earth		N/A
6.1.2.1	Requirements	Not connected to telecommunication networks.	N/A
	Supply voltage (V) .....:		—
	Current in the test circuit (mA) .....:		—
6.1.2.2	Exclusions .....:		N/A
6.2	**Protection of equipment users from overvoltages on telecommunication networks**		N/A
6.2.1	Separation requirements	Not connected to telecommunication networks.	N/A
6.2.2	Electric strength test procedure		N/A
6.2.2.1	Impulse test		N/A
6.2.2.2	Steady-state test		N/A
6.2.2.3	Compliance criteria		N/A
6.3	**Protection of the telecommunication wiring system from overheating**		N/A
	Max. output current (A) .....:		—
	Current limiting method .....:		—
7	**CONNECTION TO CABLE DISTRIBUTION SYSTEMS**		N/A
7.1	General	Not connected to cable distribution systems.	N/A
7.2	Protection of cable distribution system service persons, and users of other equipment connected to the system, from hazardous voltages in the equipment		N/A
7.3	Protection of equipment users from overvoltages on the cable distribution system		N/A

IEC 60950-1			
Clause	Requirement + Test	Result - Remark	Verdict
7.4	Insulation between primary circuits and cable distribution systems		N/A
7.4.1	General		N/A
7.4.2	Voltage surge test		N/A
7.4.3	Impulse test		N/A
A	**ANNEX A, TESTS FOR RESISTANCE TO HEAT AND FIRE**		N/A
A.1	Flammability test for fire enclosures of movable equipment having a total mass exceeding 18 kg, and of stationary equipment (see 4.7.3.2)		N/A
A.1.1	Samples ..... :		—
	Wall thickness (mm) ..... :		—
A.1.2	Conditioning of samples; temperature (°C) ..... :		N/A
A.1.3	Mounting of samples ..... :		N/A
A.1.4	Test flame (see IEC 60695-11-3)		N/A
	Flame A, B, C or D ..... :		—
A.1.5	Test procedure		N/A
A.1.6	Compliance criteria		N/A
	Sample 1 burning time (s)..... :		—
	Sample 2 burning time (s)..... :		—
	Sample 3 burning time (s)..... :		—
A.2	Flammability test for fire enclosures of movable equipment having a total mass not exceeding 18 kg, and for material and components located inside fire enclosures (see 4.7.3.2 and 4.7.3.4)		N/A
A.2.1	Samples, material ..... :		—
	Wall thickness (mm) ..... :		—
A.2.2	Conditioning of samples; temperature (°C) ..... :		N/A
A.2.3	Mounting of samples ..... :		N/A
A.2.4	Test flame (see IEC 60695-11-4)		N/A
	Flame A, B or C ..... :		—
A.2.5	Test procedure		N/A
A.2.6	Compliance criteria		N/A
	Sample 1 burning time (s)..... :		—
	Sample 2 burning time (s)..... :		—
	Sample 3 burning time (s)..... :		—
A.2.7	Alternative test acc. to IEC 60695-11-5, cl. 5 and 9		N/A

IEC 60950-1			
Clause	Requirement + Test	Result - Remark	Verdict
	Sample 1 burning time (s) ..... :		—
	Sample 2 burning time (s) ..... :		—
	Sample 3 burning time (s) ..... :		—
A.3	Hot flaming oil test (see 4.6.2)		N/A
A.3.1	Mounting of samples		N/A
A.3.2	Test procedure		N/A
A.3.3	Compliance criterion		N/A

B	**ANNEX B, MOTOR TESTS UNDER ABNORMAL CONDITIONS (see 4.7.2.2 and 5.3.2)**		N/A
B.1	General requirements	No motor.	N/A
	Position ..... :		—
	Manufacturer ..... :		—
	Type ..... :		—
	Rated values ..... :		—
B.2	Test conditions		N/A
B.3	Maximum temperatures		N/A
B.4	Running overload test		N/A
B.5	Locked-rotor overload test		N/A
	Test duration (days) ..... :		—
	Electric strength test: test voltage (V) ..... :		—
B.6	Running overload test for d.c. motors in secondary circuits		N/A
B.6.1	General		N/A
B.6.2	Test procedure		N/A
B.6.3	Alternative test procedure		N/A
B.6.4	Electric strength test; test voltage (V) ..... :		N/A
B.7	Locked-rotor overload test for d.c. motors in secondary circuits		N/A
B.7.1	General		N/A
B.7.2	Test procedure		N/A
B.7.3	Alternative test procedure		N/A
B.7.4	Electric strength test; test voltage (V) ..... :		N/A
B.8	Test for motors with capacitors		N/A
B.9	Test for three-phase motors		N/A

IEC 60950-1			
Clause	Requirement + Test	Result - Remark	Verdict
B.10	Test for series motors		N/A
	Operating voltage (V) .....:		—
C	**ANNEX C, TRANSFORMERS (see 1.5.4 and 5.3.3)**		N/A
	Position .....:		—
	Manufacturer .....:		—
	Type .....:		—
	Rated values .....:		—
	Method of protection .....:		—
C.1	Overload test		N/A
C.2	Insulation		N/A
	Protection from displacement of windings .....:		N/A
D	**ANNEX D, MEASURING INSTRUMENTS FOR TOUCH-CURRENT TESTS (see 5.1.4)**		N/A
D.1	Measuring instrument		N/A
D.2	Alternative measuring instrument		N/A
E	**ANNEX E, TEMPERATURE RISE OF A WINDING (see 1.4.13)**		N/A
F	**ANNEX F, MEASUREMENT OF CLEARANCES AND CREEPAGE DISTANCES (see 2.10 and Annex G)**		N/A
G	**ANNEX G, ALTERNATIVE METHOD FOR DETERMINING MINIMUM CLEARANCES**		N/A
G.1	Clearances		N/A
G.1.1	General		N/A
G.1.2	Summary of the procedure for determining minimum clearances		N/A
G.2	Determination of mains transient voltage (V)		N/A
G.2.1	AC mains supply .....:		N/A
G.2.2	Earthed d.c. mains supplies .....:		N/A
G.2.3	Unearthed d.c. mains supplies .....:		N/A
G.2.4	Battery operation .....:		N/A

IEC 60950-1			
Clause	Requirement + Test	Result - Remark	Verdict
G.3	Determination of telecommunication network transient voltage (V) .....:		N/A
G.4	Determination of required withstand voltage (V)		N/A
G.4.1	Mains transients and internal repetitive peaks .....:		N/A
G.4.2	Transients from telecommunication networks .....:		N/A
G.4.3	Combination of transients		N/A
G.4.4	Transients from cable distribution systems		N/A
G.5	Measurement of transient voltages (V)		N/A
	a) Transients from a mains supply		N/A
	For an a.c. mains supply		N/A
	For a d.c. mains supply		N/A
	b) Transients from a telecommunication network		N/A
G.6	Determination of minimum clearances .....:		N/A
H	**ANNEX H, IONIZING RADIATION (see 4.3.13)**		N/A
J	**ANNEX J, TABLE OF ELECTROCHEMICAL POTENTIALS (see 2.6.5.6)**		N/A
	Metal(s) used .....:		—
K	**ANNEX K, THERMAL CONTROLS (see 1.5.3 and 5.3.8)**		N/A
K.1	Making and breaking capacity	No thermal control.	N/A
K.2	Thermostat reliability; operating voltage (V) .....:		N/A
K.3	Thermostat endurance test; operating voltage (V) .....:		N/A
K.4	Temperature limiter endurance; operating voltage (V) .....:		N/A
K.5	Thermal cut-out reliability		N/A
K.6	Stability of operation		N/A
L	**ANNEX L, NORMAL LOAD CONDITIONS FOR SOME TYPES OF ELECTRICAL BUSINESS EQUIPMENT (see 1.2.2.1 and 4.5.2)**		P
L.1	Typewriters		N/A
L.2	Adding machines and cash registers		N/A
L.3	Erasers		N/A
L.4	Pencil sharpeners		N/A

IEC 60950-1			
Clause	Requirement + Test	Result - Remark	Verdict
L.5	Duplicators and copy machines		N/A
L.6	Motor-operated files		N/A
L.7	Other business equipment	See operating condition in General Product Information.	P
M	**ANNEX M, CRITERIA FOR TELEPHONE RINGING SIGNALS (see 2.3.1)**		N/A
M.1	Introduction		N/A
M.2	Method A		N/A
M.3	Method B		N/A
M.3.1	Ringing signal		N/A
M.3.1.1	Frequency (Hz) .....:		—
M.3.1.2	Voltage (V) .....:		—
M.3.1.3	Cadence; time (s), voltage (V) .....:		—
M.3.1.4	Single fault current (mA) .....:		—
M.3.2	Tripping device and monitoring voltage .....:		N/A
M.3.2.1	Conditions for use of a tripping device or a monitoring voltage		N/A
M.3.2.2	Tripping device		N/A
M.3.2.3	Monitoring voltage (V) .....:		N/A
N	**ANNEX N, IMPULSE TEST GENERATORS (see 1.5.7.2, 1.5.7.3, 2.10.3.9, 6.2.2.1, 7.3.2, 7.4.3 and Clause G.5)**		N/A
N.1	ITU-T impulse test generators		N/A
N.2	IEC 60065 impulse test generator		N/A
P	**ANNEX P, NORMATIVE REFERENCES**		—
Q	**ANNEX Q, Voltage dependent resistors (VDRs) (see 1.5.9.1)**		N/A
	a) Preferred climatic categories .....:		N/A
	b) Maximum continuous voltage .....:		N/A
	c) Pulse current .....:		N/A

IEC 60950-1			
Clause	Requirement + Test	Result - Remark	Verdict

R	**ANNEX R, EXAMPLES OF REQUIREMENTS FOR QUALITY CONTROL PROGRAMMES**		N/A
R.1	Minimum separation distances for unpopulated coated printed boards (see 2.10.6.2)		N/A
R.2	Reduced clearances (see 2.10.3)		N/A

S	**ANNEX S, PROCEDURE FOR IMPULSE TESTING (see 6.2.2.3)**		N/A
S.1	Test equipment		N/A
S.2	Test procedure		N/A
S.3	Examples of waveforms during impulse testing		N/A

T	**ANNEX T, GUIDANCE ON PROTECTION AGAINST INGRESS OF WATER (see 1.1.2)**		N/A
			—

U	**ANNEX U, INSULATED WINDING WIRES FOR USE WITHOUT INTERLEAVED INSULATION (see 2.10.5.4)**		N/A
			—

V	**ANNEX V, AC POWER DISTRIBUTION SYSTEMS (see 1.6.1)**		N/A
V.1	Introduction		N/A
V.2	TN power distribution systems		N/A

W	**ANNEX W, SUMMATION OF TOUCH CURRENTS**		N/A
W.1	Touch current from electronic circuits		N/A
W.1.1	Floating circuits		N/A
W.1.2	Earthed circuits		N/A
W.2	Interconnection of several equipments		N/A
W.2.1	Isolation		N/A
W.2.2	Common return, isolated from earth		N/A
W.2.3	Common return, connected to protective earth		N/A

X	**ANNEX X, MAXIMUM HEATING EFFECT IN TRANSFORMER TESTS (see clause C.1)**	N/A

IEC 60950-1			
Clause	Requirement + Test	Result - Remark	Verdict
X.1	Determination of maximum input current		N/A
X.2	Overload test procedure		N/A
Y	**ANNEX Y, ULTRAVIOLET LIGHT CONDITIONING TEST (see 4.3.13.3)**		N/A
Y.1	Test apparatus .....:		N/A
Y.2	Mounting of test samples .....:		N/A
Y.3	Carbon-arc light-exposure apparatus .....:		N/A
Y.4	Xenon-arc light exposure apparatus .....:		N/A
Z	**ANNEX Z, OVERVOLTAGE CATEGORIES (see 2.10.3.2 and Clause G.2)**		N/A
AA	**ANNEX AA, MANDREL TEST (see 2.10.5.8)**		N/A
BB	**ANNEX BB, CHANGES IN THE SECOND EDITION**		—
CC	**ANNEX CC, Evaluation of integrated circuit (IC) current limiters**		N/A
CC.1	General		N/A
CC.2	Test program 1……..:		N/A
CC.3	Test program 2……..:		N/A
DD	**ANNEX DD, Requirements for the mounting means of rack-mounted equipment**		N/A
DD.1	General	Not such equipment.	N/A
DD.2	Mechanical strength test, variable N……..:		N/A
DD.3	Mechanical strength test, 250N, including end stops……..:		N/A
DD.4	Compliance……..:		N/A
EE	**ANNEX EE, Household and home/office document/media shredders**		N/A
EE.1	General	Not such equipment.	N/A
EE.2	Markings and instructions		N/A
	Use of markings or symbols……..:		N/A
	Information of user instructions, maintenance and/or servicing instructions……..:		N/A
EE.3	Inadvertent reactivation test……..:		N/A
EE.4	Disconnection of power to hazardous moving parts:		N/A

IEC 60950-1			
Clause	Requirement + Test	Result - Remark	Verdict
	Use of markings or symbols……..:		N/A
EE.5	Protection against hazardous moving parts		N/A
	Test with test finger (Figure 2A) ……..:		N/A
	Test with wedge probe (Figure EE1 and EE2) ……:		N/A

1.5.1	TABLE: List of critical components	P

Object/part No.	Manufacturer/ trademark	Type/model	Technical data	Standard (Edition / year)	Mark(s) of conformity[1])
Plastic enclosure	Sabic Innovative Plastics	940	Min. 2.7mm thick V-0	UL 94	UL
Metal enclosure	Various	Various	Min. 2.7mm thick	IEC/EN 60950-1	Tested in equipment
Fuse F1 Alternative	AEM LITTELFUSE	F0603SB8000V03 2T 458 SERIES	32VDC, 8A, time-delay 25VDC, 10A, time-delay	UL 284-1 UL 284-14 UL 284-1 UL 284-14	UL UL
PCB material	Various	Various	Min. V-1, 130°C	UL 94	UL
DC-IN connector Alternative	Molex JOINT TECH	5569 C4255WR-2-4P	Max.600VDC, 13A V-0 Max.600VDC, 9A V-0	UL 1977 EN 61984 UL 1977	UL TUV UL
Power adapter (optional, use only at altitude up to 2000m)	Globtek	GT-43004P15024-T3 GT-43004P15024-T3A	Input: 100-240V~, 50-60Hz 2.0A; Output: DC 24V 6.25A Class I	IEC60950-1:2005+A1:2009 EN 60950-1:2006 +A11:2009 +A1:2010 +A12:2011 UL60950-1 CSA-C22.2 No. 60950-1	CB issued by intertek N by nemko UL

Supplementary information:

[1]) Provided evidence ensures the agreed level of compliance. See OD-CB2039.

1.5.1	TABLE: Opto Electronic Devices	N/A

Manufacturer ..... :

Type..... :

Separately tested..... :
Bridging insulation ..... :
External creepage distance..... :

Internal creepage distance ..... :

Distance through insulation ..... :

Tested under the following conditions ..... :

Input..... :
Output..... :

supplementary information

1.6.2	TABLE: Electrical data (in normal conditions)					P
U (V)	Irated (A)	I (A)	P (W)	Fuse #	Ifuse (A)	Condition/status
24VDC	6.25A	5.32	123.29	F1	5.32	Normal load.
Supplementary information:						

2.1.1.5 c) 1)	TABLE: max. V, A, VA test	N/A

Voltage (rated) (V)	Current (rated) (A)	Voltage (max.) (V)	Current (max.) (A)	VA (max.) (VA)
supplementary information:				

2.1.1.5 c) 2)	TABLE: stored energy	N/A

Capacitance C (µF)	Voltage U (V)	Energy E (J)
supplementary information:		

2.2	TABLE: evaluation of voltage limiting components in SELV circuits	N/A

Component (measured between)	max. voltage (V) (normal operation)		Voltage Limiting Components
	V peak	V d.c.	

Fault test performed on voltage limiting components	Voltage measured (V) in SELV circuits (V peak or V d.c.)
supplementary information:	

2.4	TABLE: Limited current circuits	N/A

Location	Voltage (V)	Current (mA)	Freq. (kHz)	Limit (mA)
supplementary information:				

2.5	**TABLE: limited power sources**	N/A

Circuit output tested:				
Measured Uoc (V) with all load circuits disconnected:				
	I_{sc} (A)		VA	
	Meas.	Limit	Meas.	Limit
supplementary information:				
Sc=Short circuit, Oc=Open circuit				

2.10.2	**Table: working voltage measurement**	N/A

Location	RMS voltage (V)	Peak voltage (V)	Comments
supplementary information:			

2.10.3 and 2.10.4	TABLE: Clearance and creepage distance measurements	N/A

Clearance (cl) and creepage distance (cr) at/of/between:	U peak (V)	U r.m.s. (V)	Required cl (mm)	cl (mm)	Required cr (mm)	cr (mm)
Supplementary information:						

2.10.5	TABLE: Distance through insulation measurements	N/A

Distance through insulation (DTI) at/of:	U peak (V)	U rms (V)	Test voltage (V)	Required DTI (mm)	DTI (mm)
Supplementary information:					

4.3.8	TABLE: Batteries	N/A
The tests of 4.3.8 are applicable only when appropriate battery data is not available		N/A
Is it possible to install the battery in a reverse polarity position?		N/A

	Non-rechargeable batteries			Rechargeable batteries					
	Discharging		Un-intentional charging	Charging		Discharging		Reversed charging	
	Meas. current	Manuf. Specs.		Meas. current	Manuf. Specs.	Meas. current	Manuf. Specs.	Meas. current	Manuf. Specs.
Max. current during normal condition									
Max. current during fault condition									

Test results:		Verdict
- Chemical leaks		N/A
- Explosion of the battery		N/A
- Emission of flame or expulsion of molten metal		N/A
- Electric strength tests of equipment after completion of tests		N/A
Supplementary information:		

4.3.8	TABLE: Batteries	N/A

Battery category..... :
Manufacturer ..... :
Type / model..... :
Voltage ..... :
Capacity..... :
Tested and Certified by (incl. Ref. No.) ..... :
Circuit protection diagram:

MARKINGS AND INSTRUCTIONS (1.7.13)	
Location of replaceable battery	N/A
Language(s) ……..:	N/A
Close to the battery ……..:	N/A
In the servicing instructions ……..:	N/A
In the operating instructions ……..:	N/A

4.5	TABLE: Thermal requirements			P
	Supply voltage (V) .....:	24Vdc	—	—
	Ambient T_{min} (°C) .....:	55	—	—
	Ambient T_{max} (°C) .....:	55	—	—

Maximum measured temperature T of part/at::	T (°C)		Allowed T_{max} (°C)
Metal enclosure	67.0	—	70
Plastic enclosure	64.3	—	95
PCB near U2	88.9	—	130
PCB near U100	83.4	—	130
PCB near Q102	86.8	—	130

Supplementary information:

Temperature T of winding:	t_1 (°C)	R_1 (Ω)	t_2 (°C)	R_2 (Ω)	T (°C)	Allowed T_{max} (°C)	Insulation class

Supplementary information:

Tma: 55°C

4.5.5	TABLE: Ball pressure test of thermoplastic parts		N/A
	Allowed impression diameter (mm) .....:	≤ 2 mm	—

Part	Test temperature (°C)	Impression diameter (mm)
Supplementary information:		

4.7	TABLE: Resistance to fire				P
Part	Manufacturer of material	Type of material	Thickness (mm)	Flammability class	Evidence
Supplementary information: See appended table 1.5.1.					

5.1	TABLE: touch current measurement		N/A
Measured between:	Measured (mA)	Limit (mA)	Comments/conditions
supplementary information:			

5.2	TABLE: Electric strength tests, impulse tests and voltage surge tests		N/A
Test voltage applied between:	Voltage shape (AC, DC, impulse, surge)	Test voltage (V)	Breakdown Yes / No
Supplementary information:			

5.3	TABLE: Fault condition tests		P
	Ambient temperature (°C) .....:	23	—
	Power source for EUT: Manufacturer, model/type, output rating .....:	Refer to table 1.5.1	—

Component No.	Fault	Supply voltage (V)	Test time	Fuse #	Fuse current (A)	Observation
Resistor R132	S-C	24	10min	—	—	Charger no output. No hazards occurred.
Resistor R404	S-C	24	10min	—	—	Charger no output. No hazards occurred.
Supplementary information: S-C: short-circuit.						

C.2	TABLE: transformers						N/A
Loc.	Tested insulation	Working voltage peak / V (2.10.2)	Working voltage rms / V (2.10.2)	Required electric strength (5.2)	Required clearance / mm (2.10.3)	Required creepage distance / mm (2.10.4)	Required distance thr. insul. (2.10.5)
Loc.	Tested insulation			Test voltage/ V	Measured clearance / mm	Measured creepage dist./ mm	Measured distance thr. insul. / mm; number of layers
supplementary information:							

C.2	TABLE: transformers	N/A

Nemko
www.nemko.com

Photos

Report No. 242467

Photo 1: overview

Photo 2: overview

Nemko
www.nemko.com

Photos

Report No. 242467

Photo 3: Battery pack bay

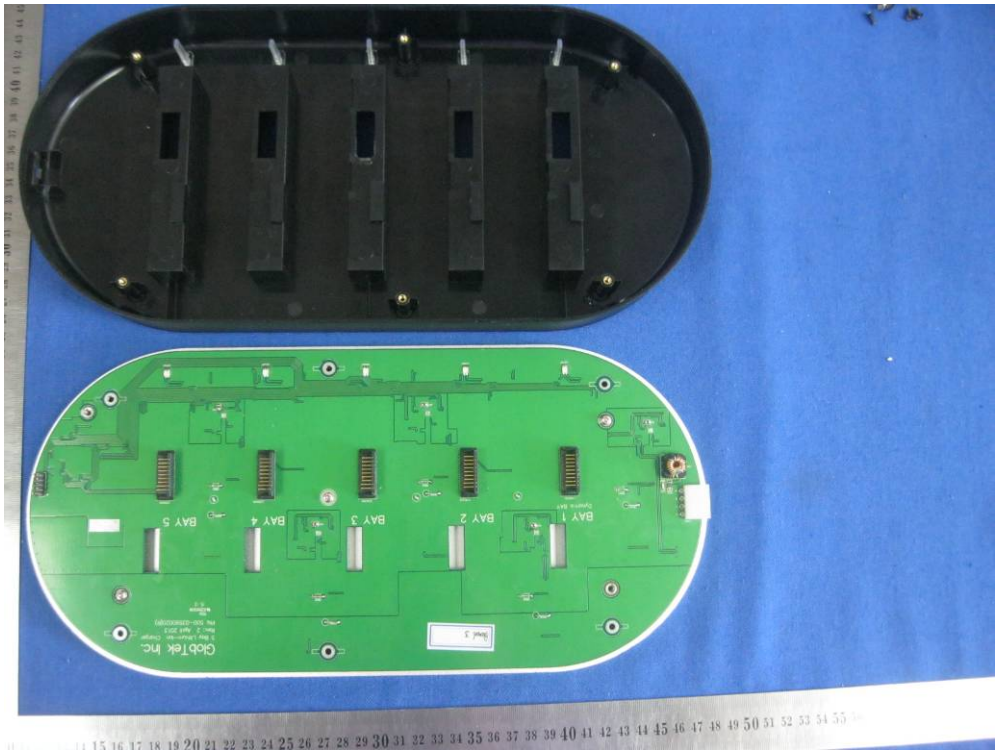

Photo 4: Inner view

Nemko
www.nemko.com

Photos

Report No. 242467

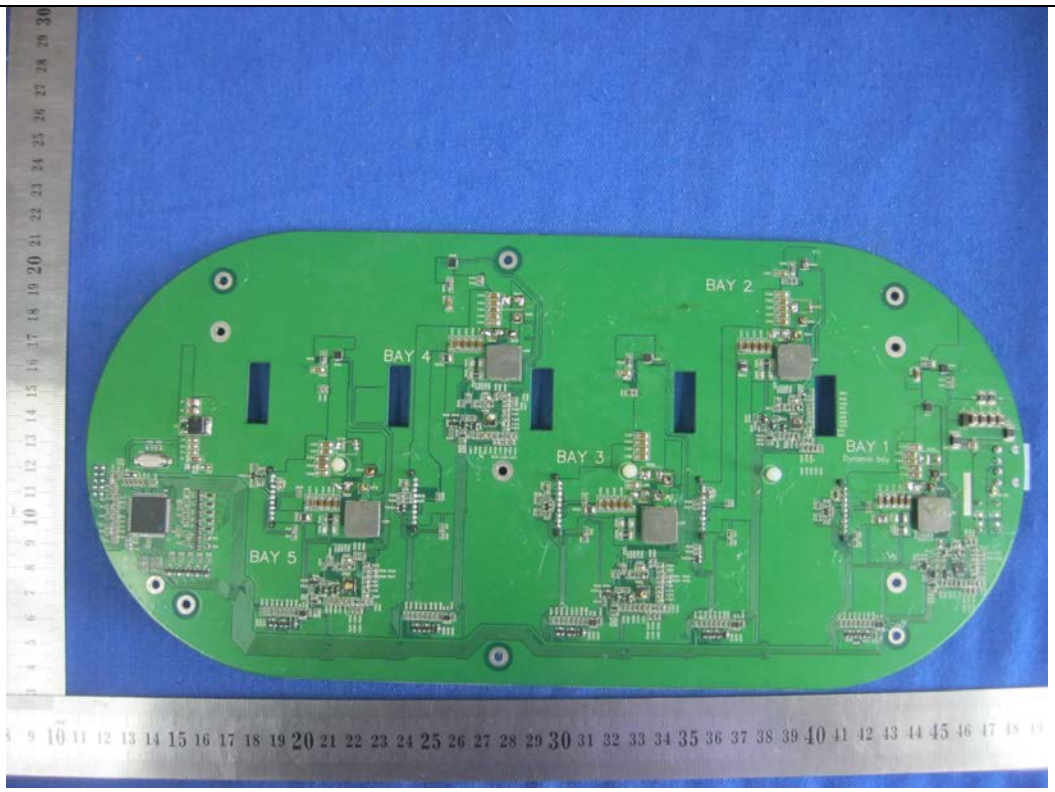

Photo 5: PCB

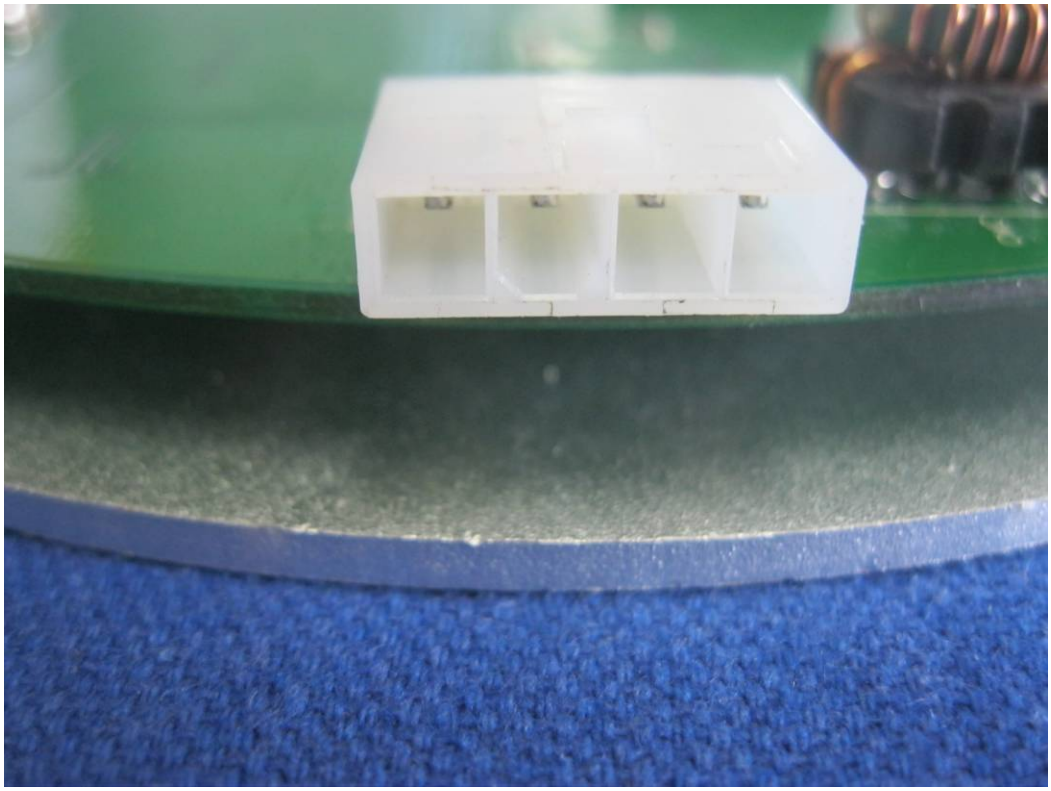

Photo 6: DC-IN connector

IEC60950_1C - ATTACHMENT			
Clause	Requirement + Test	Result - Remark	Verdict

ATTACHMENT TO TEST REPORT IEC 60950-1
EUROPEAN GROUP DIFFERENCES AND NATIONAL DIFFERENCES

Information technology equipment – Safety –

Part 1: General requirements

Differences according to.....:	EN 60950-1:2006/A11:2009/A1:2010/A12:2011
Attachment Form No.....:	EU_GD_IEC60950_1C_II
Attachment Originator .....:	SGS Fimko Ltd
Master Attachment.....:	Date 2011-08

Copyright © 2011 IEC System for Conformity Testing and Certification of Electrical Equipment (IECEE), Geneva, Switzerland. All rights reserved.

EN 60950-1:2006/A11:2009/A1:2010/A12:2011 – CENELEC COMMON MODIFICATIONS

IEC 60950-1, GROUP DIFFERENCES (CENELEC common modifications EN)			
Clause	Requirement + Test	Result - Remark	Verdict
Contents	Add the following annexes: Annex ZA (normative) — Normative references to international publications with their corresponding European publications Annex ZB (normative) — Special national conditions		P
General	Delete all the "country" notes in the reference document (IEC 60950-1:2005) according to the following list: 1.4.8 Note 2; 1.5.1 Note 2 & 3; 1.5.7.1 Note 1.5.8 Note 2; 1.5.9.4 Note; 1.7.2.1 Note 4, 5 & 6 2.2.3 Note; 2.2.4 Note; 2.3.2 Note 2.3.2.1 Note 2; 2.3.4 Note 2; 2.6.3.3 Note 2 & 3 2.7.1 Note; 2.10.3.2 Note 2; 2.10.5.13 Note 3 3.2.1.1 Note; 3.2.4 Note 3.; 2.5.1 Note 2 4.3.6 Note 1 & 2; 4.7 Note 4; 4.7.2.2 Note 4.7.3.1Note 2; 5.1.7.1 Note 3 & 4; 5.3.7 Note 1 6 Note 2 & 5; 6.1.2.1 Note 2; 6.1.2.2 Note 6.2.2 Note; 6.2.2.1 Note 2; 6.2.2.2 Note 7.1 Note 3; 7.2 Note; 7.3 Note 1 & 2 G.2.1 Note 2; Annex H Note 2		P
General (A1:2010)	Delete all the "country" notes in the reference document (IEC 60950-1:2005/A1:2010) according to the following list: 1.5.7.1 Note; 6.1.2.1 Note 2 6.2.2.1 Note 2; EE.3 Note		P

IEC60950_1C - ATTACHMENT			
Clause	Requirement + Test	Result - Remark	Verdict

IEC 60950-1, GROUP DIFFERENCES (CENELEC common modifications EN)			
Clause	Requirement + Test	Result - Remark	Verdict
1.3.Z1	Add the following subclause: 1.3.Z1 Exposure to excessive sound pressure The apparatus shall be so designed and constructed as to present no danger when used for its intended purpose, either in normal operating conditions or under fault conditions, particularly providing protection against exposure to excessive sound pressures from headphones or earphones. NOTE Z1 A new method of measurement is described in EN 50332-1, Sound system equipment: Headphones and earphones associated with portable audio equipment - Maximum sound pressure level measurement methodology and limit considerations - Part 1: General method for “one package equipment”, and in EN 50332-2, Sound system equipment: Headphones and earphones associated with portable audio equipment - Maximum sound pressure level measurement methodology and limit considerations - Part 2: Guidelines to associate sets with headphones coming from different manufacturers.		N/A
(A12:2011)	In EN 60950-1:2006/A12:2011 Delete the addition of 1.3.Z1 / EN 60950-1:2006 Delete the definition 1.2.3.Z1 / EN 60950-1:2006 /A1:2010		P
1.5.1	Add the following NOTE: NOTE Z1 The use of certain substances in electrical and electronic equipment is restricted within the EU: see Directive 2002/95/EC		P
1.7.2.1 (A1:2010)	In addition, for a PORTABLE SOUND SYSTEM, the instructions shall include a warning that excessive sound pressure from earphones and headphones can cause hearing loss.	Battery charger.	N/A
1.7.2.1 (A12.2011)	In EN 60950-1:2006/A12:2011 Delete NOTE Z1 and the addition for Portable Sound System. Add the following clause and annex to the existing standard and amendments.	Battery charger.	N/A
	Zx Protection against excessive sound pressure from personal music players		N/A

IEC60950_1C - ATTACHMENT			
Clause	Requirement + Test	Result - Remark	Verdict

IEC 60950-1, GROUP DIFFERENCES (CENELEC common modifications EN)			
Clause	Requirement + Test	Result - Remark	Verdict
	Zx.1 General This sub-clause specifies requirements for protection against excessive sound pressure from personal music players that are closely coupled to the ear. It also specifies requirements for earphones and headphones intended for use with personal music players. A personal music player is a portable equipment for personal use, that: – is designed to allow the user to listen to recorded or broadcast sound or video; and – primarily uses headphones or earphones that can be worn in or on or around the ears; and – allows the user to walk around while in use. NOTE 1 Examples are hand-held or body-worn portable CD players, MP3 audio players, mobile phones with MP3 type features, PDA's or similar equipment. A personal music player and earphones or headphones intended to be used with personal music players shall comply with the requirements of this sub-clause. The requirements in this sub-clause are valid for music or video mode only. The requirements do not apply: – while the personal music player is connected to an external amplifier; or – while the headphones or earphones are not used. NOTE 2 An external amplifier is an amplifier which is not part of the personal music player or the listening device, but which is intended to play the music as a standalone music player. The requirements do not apply to: – hearing aid equipment and professional equipment; NOTE 3 Professional equipment is equipment sold through special sales channels. All products sold through normal electronics stores are considered not to be professional equipment.		N/A

IEC60950_1C - ATTACHMENT			
Clause	Requirement + Test	Result - Remark	Verdict

IEC 60950-1, GROUP DIFFERENCES (CENELEC common modifications EN)			
Clause	Requirement + Test	Result - Remark	Verdict
	– analogue personal music players (personal music players without any kind of digital processing of the sound signal) that are brought to the market before the end of 2015. NOTE 4 This exemption has been allowed because this technology is falling out of use and it is expected that within a few years it will no longer exist. This exemption will not be extended to other technologies. For equipment which is clearly designed or intended for use by young children, the limits of EN 71-1 apply.		N/A
	Zx.2 Equipment requirements No safety provision is required for equipment that complies with the following: – equipment provided as a package (personal music player with its listening device), where the acoustic output $L_{Aeq,T}$ is ≤ 85 dBA measured while playing the fixed “programme simulation noise” as described in EN 50332-1; and – a personal music player provided with an analogue electrical output socket for a listening device, where the electrical output is ≤ 27 mV measured as described in EN 50332-2, while playing the fixed “programme simulation noise” as described in EN 50332-1. NOTE 1 Wherever the term acoustic output is used in this clause, the 30 s A-weighted equivalent sound pressure level $L_{Aeq,T}$ is meant. See also Zx.5 and Annex Zx. All other equipment shall: a) protect the user from unintentional acoustic outputs exceeding those mentioned above; and b) have a standard acoustic output level not exceeding those mentioned above, and automatically return to an output level not exceeding those mentioned above when the power is switched off; and		N/A

IEC60950_1C - ATTACHMENT			
Clause	Requirement + Test	Result - Remark	Verdict

IEC 60950-1, GROUP DIFFERENCES (CENELEC common modifications EN)			
Clause	Requirement + Test	Result - Remark	Verdict
	c) provide a means to actively inform the user of the increased sound pressure when the equipment is operated with an acoustic output exceeding those mentioned above. Any means used shall be acknowledged by the user before activating a mode of operation which allows for an acoustic output exceeding those mentioned above. The acknowledgement does not need to be repeated more than once every 20 h of cumulative listening time; and NOTE 2 Examples of means include visual or audible signals. Action from the user is always required. NOTE 3 The 20 h listening time is the accumulative listening time, independent how often and how long the personal music player has been switched off. d) have a warning as specified in Zx.3; and e) not exceed the following: 1) equipment provided as a package (player with Its listening device), the acoustic output shall be ≤ 100 dBA measured while playing the fixed “programme simulation noise” described in EN 50332-1; and 2) a personal music player provided with an analogue electrical output socket for a listening device, the electrical output shall be ≤ 150 mV measured as described in EN 50332-2, while playing the fixed “programme simulation noise” described in EN 50332-1. For music where the average sound pressure (long term $L_{Aeq,T}$) measured over the duration of the song is lower than the average produced by the programme simulation noise, the warning does not need to be given as long as the average sound pressure of the song is below the basic limit of 85 dBA. In this case T becomes the duration of the song. NOTE 4 Classical music typically has an average sound pressure (long term $L_{Aeq,T}$) which is much lower than the average programme simulation noise. Therefore, if the player is capable to analyse the song and compare it with the programme simulation noise, the warning does not need to be given as long as the average sound pressure of the song is below the basic limit of 85 dBA. For example, if the player is set with the programme simulation noise to 85 dBA, but the average music level of the song is only 65 dBA, there is no need to give a warning or ask an acknowledgement as long as the average sound level of the song is not above the basic limit of 85 dBA.		N/A

IEC60950_1C - ATTACHMENT			
Clause	Requirement + Test	Result - Remark	Verdict

IEC 60950-1, GROUP DIFFERENCES (CENELEC common modifications EN)			
Clause	Requirement + Test	Result - Remark	Verdict
	Zx.3 Warning The warning shall be placed on the equipment, or on the packaging, or in the instruction manual and shall consist of the following: – the symbol of Figure 1 with a minimum height of 5 mm; and – the following wording, or similar: “To prevent possible hearing damage, do not listen at high volume levels for long periods.” **Figure 1 – Warning label (IEC 60417-6044)** Alternatively, the entire warning may be given through the equipment display during use, when the user is asked to acknowledge activation of the higher level.		N/A
	Zx.4 Requirements for listening devices (headphones and earphones)		N/A
	Zx.4.1 Wired listening devices with analogue input With 94 dBA sound pressure output $L_{Aeq,T}$, the input voltage of the fixed “programme simulation noise” described in EN 50332-2 shall be ≥ 75 mV. This requirement is applicable in any mode where the headphones can operate (active or passive), including any available setting (for example built-in volume level control). NOTE The values of 94 dBA – 75 mV correspond with 85dBA – 27 mV and 100 dBA – 150 mV.		N/A

IEC60950_1C - ATTACHMENT			
Clause	Requirement + Test	Result - Remark	Verdict

IEC 60950-1, GROUP DIFFERENCES (CENELEC common modifications EN)			
Clause	Requirement + Test	Result - Remark	Verdict
	Zx.4.2 Wired listening devices with digital input With any playing device playing the fixed "programme simulation noise" described in EN 50332-1 (and respecting the digital interface standards, where a digital interface standard exists that specifies the equivalent acoustic level), the acoustic output $L_{Aeq,T}$ of the listening device shall be ≤ 100 dBA. This requirement is applicable in any mode where the headphones can operate, including any available setting (for example built-in volume level control, additional sound feature like equalization, etc.). NOTE An example of a wired listening device with digital input is a USB headphone.		N/A
	Zx.4.3 Wireless listening devices In wireless mode: – with any playing and transmitting device playing the fixed programme simulation noise described in EN 50332-1; and – respecting the wireless transmission standards, where an air interface standard exists that specifies the equivalent acoustic level; and – with volume and sound settings in the listening device (for example built-in volume level control, additional sound feature like equalization, etc.) set to the combination of positions that maximize the measured acoustic output for the abovementioned programme simulation noise, the acoustic output $L_{Aeq,T}$ of the listening device shall be ≤ 100 dBA. NOTE An example of a wireless listening device is a Bluetooth headphone.		N/A
	Zx.5 Measurement methods Measurements shall be made in accordance with EN 50332-1 or EN 50332-2 as applicable. Unless stated otherwise, the time interval T shall be 30 s. NOTE Test method for wireless equipment provided without listening device should be defined.		N/A

IEC60950_1C - ATTACHMENT			
Clause	Requirement + Test	Result - Remark	Verdict

IEC 60950-1, GROUP DIFFERENCES (CENELEC common modifications EN)			
Clause	Requirement + Test	Result - Remark	Verdict
2.7.1	Replace the subclause as follows: Basic requirements To protect against excessive current, short-circuits and earth faults in PRIMARY CIRCUITS, protective devices shall be included either as integral parts of the equipment or as parts of the building installation, subject to the following, a), b) and c): a) except as detailed in b) and c), protective devices necessary to comply with the requirements of 5.3 shall be included as parts of the equipment; b) for components in series with the mains input to the equipment such as the supply cord, appliance coupler, r.f.i. filter and switch, short-circuit and earth fault protection may be provided by protective devices in the building installation; c) it is permitted for PLUGGABLE EQUIPMENT TYPE B or PERMANENTLY CONNECTED EQUIPMENT, to rely on dedicated overcurrent and short-circuit protection in the building installation, provided that the means of protection, e.g. fuses or circuit breakers, is fully specified in the installation instructions. If reliance is placed on protection in the building installation, the installation instructions shall so state, except that for PLUGGABLE EQUIPMENT TYPE A the building installation shall be regarded as providing protection in accordance with the rating of the wall socket outlet.	Class III equipment.	N/A
2.7.2	This subclause has been declared ‘void’.		—
3.2.3	Delete the NOTE in Table 3A, and delete also in this table the conduit sizes in parentheses.		N/A
3.2.5.1	Replace “60245 IEC 53” by “H05 RR-F”; “60227 IEC 52” by “H03 VV-F or H03 VVH2-F”; “60227 IEC 53” by “H05 VV-F or H05 VVH2-F2”. In Table 3B, replace the first four lines by the following: Up to and including 6 | 0,75 [a)] | Over 6 up to and including 10| (0,75) [b)] 1,0 | Over 10 up to and including 16| (1,0) [c)] 1,5 | In the conditions applicable to Table 3B delete the words “in some countries” in condition [a)]. In NOTE 1, applicable to Table 3B, delete the second sentence.	Class III equipment.	N/A

IEC60950_1C - ATTACHMENT			
Clause	Requirement + Test	Result - Remark	Verdict

IEC 60950-1, GROUP DIFFERENCES (CENELEC common modifications EN)			
Clause	Requirement + Test	Result - Remark	Verdict
3.3.4	In Table 3D, delete the fourth line: conductor sizes for 10 to 13 A, and replace with the following: Over 10 up to and including 16 | 1,5 to 2,5 | 1,5 to 4 | Delete the fifth line: conductor sizes for 13 to 16 A		N/A
4.3.13.6 (A1:2010)	Replace the existing NOTE by the following: NOTE Z1 Attention is drawn to: 1999/519/EC: Council Recommendation on the limitation of exposure of the general public to electromagnetic fields 0 Hz to 300 GHz, and 2006/25/EC: Directive on the minimum health and safety requirements regarding the exposure of workers to risks arising from physical agents (artifical optical radiation).		N/A
	Standards taking into account mentioned Recommendation and Directive which demonstrate compliance with the applicable EU Directive are indicated in the OJEC.		N/A
Annex H	Replace the last paragraph of this annex by: At any point 10 cm from the surface of the OPERATOR ACCESS AREA, the dose rate shall not exceed 1 µSv/h (0,1 mR/h) (see NOTE). Account is taken of the background level. Replace the notes as follows: NOTE These values appear in Directive 96/29/Euratom. Delete NOTE 2.	Not emit X-ray radiation.	N/A
Bibliography	Additional EN standards.		—

ZA	**NORMATIVE REFERENCES TO INTERNATIONAL PUBLICATIONS WITH THEIR CORRESPONDING EUROPEAN PUBLICATIONS**	—

ZB ANNEX (normative) SPECIAL NATIONAL CONDITIONS (EN)			
Clause	Requirement + Test	Result - Remark	Verdict
1.2.4.1	In **Denmark**, certain types of Class I appliances (see 3.2.1.1) may be provided with a plug not establishing earthing conditions when inserted into Danish socket-outlets.	Class III equipment.	N/A
1.2.13.14	In **Norway** and **Sweden**, for requirements see 1.7.2.1 and 7.3 of this annex.		N/A

IEC60950_1C - ATTACHMENT			
Clause	Requirement + Test	Result - Remark	Verdict

ZB ANNEX (normative) SPECIAL NATIONAL CONDITIONS (EN)			
Clause	Requirement + Test	Result - Remark	Verdict
1.5.7.1	In **Finland, Norway** and **Sweden**, resistors bridging BASIC INSULATION in CLASS I PLUGGABLE EQUIPMENT TYPE A must comply with the requirements in 1.5.7.1. In addition when a single resistor is used, the resistor must withstand the resistor test in 1.5.7.2.		N/A
1.5.8	In **Norway**, due to the IT power system used (see annex V, Figure V.7), capacitors are required to be rated for the applicable line-to-line voltage (230 V).		N/A
1.5.9.4	In **Finland**, **Norway** and **Sweden**, the third dashed sentence is applicable only to equipment as defined in 6.1.2.2 of this annex.		N/A

IEC60950_1C - ATTACHMENT			
Clause	Requirement + Test	Result - Remark	Verdict

ZB ANNEX (normative) SPECIAL NATIONAL CONDITIONS (EN)			
Clause	Requirement + Test	Result - Remark	Verdict
1.7.2.1	In **Finland**, **Norway** and **Sweden**, CLASS I PLUGGABLE EQUIPMENT TYPE A intended for connection to other equipment or a network shall, if safety relies on connection to protective earth or if surge suppressors are connected between the network terminals and accessible parts, have a marking stating that the equipment must be connected to an earthed mains socket-outlet. The marking text in the applicable countries shall be as follows: In Finland: "Laite on liitettävä suojakoskettimilla varustettuun pistorasiaan" In Norway: “Apparatet må tilkoples jordet stikkontakt” In Sweden: “Apparaten skall anslutas till jordat uttag” In **Norway** and **Sweden**, the screen of the cable distribution system is normally not earthed at the entrance of the building and there is normally no equipotential bonding system within the building. Therefore the protective earthing of the building installation need to be isolated from the screen of a cable distribution system. It is however accepted to provide the insulation external to the equipment by an adapter or an interconnection cable with galvanic isolator, which may be provided by e.g. a retailer. The user manual shall then have the following or similar information in Norwegian and Swedish language respectively, depending on in what country the equipment is intended to be used in: “Equipment connected to the protective earthing of the building installation through the mains connection or through other equipment with a connection to protective earthing – and to a cable distribution system using coaxial cable, may in some circumstances create a fire hazard. Connection to a cable distribution system has therefore to be provided through a device providing electrical isolation below a certain frequency range (galvanic isolator, see EN 60728-11).”		N/A

IEC60950_1C - ATTACHMENT			
Clause	Requirement + Test	Result - Remark	Verdict

ZB ANNEX (normative) SPECIAL NATIONAL CONDITIONS (EN)			
Clause	Requirement + Test	Result - Remark	Verdict
	NOTE In Norway, due to regulation for installations of cable distribution systems, and in Sweden, a galvanic isolator shall provide electrical insulation below 5 MHz. The insulation shall withstand a dielectric strength of 1,5 kV r.m.s., 50 Hz or 60 Hz, for 1 min. Translation to Norwegian (the Swedish text will also be accepted in Norway): “Utstyr som er koplet til beskyttelsesjord via nettplugg og/eller via annet jordtilkoplet utstyr – og er tilkoplet et kabel-TV nett, kan forårsake brannfare. For å unngå dette skal det ved tilkopling av utstyret til kabel-TV nettet installeres en galvanisk isolator mellom utstyret og kabel- TV nettet.” Translation to Swedish: ”Utrustning som är kopplad till skyddsjord via jordat vägguttag och/eller via annan utrustning och samtidigt är kopplad till kabel-TV nät kan i vissa fall medföra risk för brand. För att undvika detta skall vid anslutning av utrustningen till kabel-TV nät galvanisk isolator finnas mellan utrustningen och kabel-TV nätet.”		N/A
1.7.5	In **Denmark**, socket-outlets for providing power to other equipment shall be in accordance with the Heavy Current Regulations, Section 107-2-D1, Standard Sheet DK 1-3a, DK 1-5a or DK 1-7a, when used on Class I equipment. For STATIONARY EQUIPMENT the socket-outlet shall be in accordance with Standard Sheet DK 1-1b or DK 1-5a. For **CLASS II EQUIPMENT** the socket outlet shall be in accordance with Standard Sheet DKA 1-4a.		N/A
2.2.4	In **Norway**, for requirements see 1.7.2.1, 6.1.2.1 and 6.1.2.2 of this annex.		N/A
2.3.2	In **Finland**, **Norway** and **Sweden** there are additional requirements for the insulation. See 6.1.2.1 and 6.1.2.2 of this annex.		N/A
2.3.4	In **Norway**, for requirements see 1.7.2.1, 6.1.2.1 and 6.1.2.2 of this annex.		N/A
2.6.3.3	In the **United Kingdom**, the current rating of the circuit shall be taken as 13 A, not 16 A.		N/A

IEC60950_1C - ATTACHMENT			
Clause	Requirement + Test	Result - Remark	Verdict

ZB ANNEX (normative) SPECIAL NATIONAL CONDITIONS (EN)			
Clause	Requirement + Test	Result - Remark	Verdict
2.7.1	In the **United Kingdom**, to protect against excessive currents and short-circuits in the PRIMARY CIRCUIT of DIRECT PLUG-IN EQUIPMENT, tests according to 5.3 shall be conducted, using an external protective device rated 30 A or 32 A. If these tests fail, suitable protective devices shall be included as integral parts of the DIRECT PLUG-IN EQUIPMENT, so that the requirements of 5.3 are met.		N/A
2.10.5.13	In **Finland**, **Norway** and **Sweden**, there are additional requirements for the insulation, see 6.1.2.1 and 6.1.2.2 of this annex.		N/A
3.2.1.1	In **Switzerland**, supply cords of equipment having a RATED CURRENT not exceeding 10 A shall be provided with a plug complying with SEV 1011 or IEC 60884-1 and one of the following dimension sheets: SEV 6532-2.1991 Plug Type 15 3P+N+PE 250/400 V, 10 A SEV 6533-2.1991 Plug Type 11 L+N 250 V, 10 A SEV 6534-2.1991 Plug Type 12 L+N+PE 250 V, 10 A In general, EN 60309 applies for plugs for currents exceeding 10 A. However, a 16 A plug and socket-outlet system is being introduced in Switzerland, the plugs of which are according to the following dimension sheets, published in February 1998: SEV 5932-2.1998: Plug Type 25 , 3L+N+PE 230/400 V, 16 A SEV 5933-2.1998:Plug Type 21, L+N, 250 V, 16A SEV 5934-2.1998: Plug Type 23, L+N+PE 250 V, 16 A		N/A

IEC60950_1C - ATTACHMENT			
Clause	Requirement + Test	Result - Remark	Verdict

ZB ANNEX (normative) SPECIAL NATIONAL CONDITIONS (EN)			
Clause	Requirement + Test	Result - Remark	Verdict
3.2.1.1	In **Denmark**, supply cords of single-phase equipment having a rated current not exceeding13 A shall be provided with a plug according to the Heavy Current Regulations, Section 107-2-D1. CLASS I EQUIPMENT provided with socket-outlets with earth contacts or which are intended to be used in locations where protection against indirect contact is required according to the wiring rules shall be provided with a plug in accordance with standard sheet DK 2-1a or DK 2-5a. If poly-phase equipment and single-phase equipment having a RATED CURRENT exceeding 13 A is provided with a supply cord with a plug, this plug shall be in accordance with the Heavy Current Regulations, Section 107-2-D1 or EN 60309-2.		N/A
3.2.1.1	In **Spain**, supply cords of single-phase equipment having a rated current not exceeding 10 A shall be provided with a plug according to UNE 20315:1994. Supply cords of single-phase equipment having a rated current not exceeding 2,5 A shall be provided with a plug according to UNE-EN 50075:1993. CLASS I EQUIPMENT provided with socket-outlets with earth contacts or which are intended to be used in locations where protection against indirect contact is required according to the wiring rules, shall be provided with a plug in accordance with standard UNE 20315:1994. If poly-phase equipment is provided with a supply cord with a plug, this plug shall be in accordance with UNE-EN 60309-2.		N/A
3.2.1.1	In the **United Kingdom**, apparatus which is fitted with a flexible cable or cord and is designed to be connected to a mains socket conforming to BS 1363 by means of that flexible cable or cord and plug, shall be fitted with a ‘standard plug’ in accordance with Statutory Instrument 1768:1994 - The Plugs and Sockets etc. (Safety) Regulations 1994, unless exempted by those regulations. NOTE ‘Standard plug’ is defined in SI 1768:1994 and essentially means an approved plug conforming to BS 1363 or an approved conversion plug.		N/A

IEC60950_1C - ATTACHMENT			
Clause	Requirement + Test	Result - Remark	Verdict

ZB ANNEX (normative) SPECIAL NATIONAL CONDITIONS (EN)			
Clause	Requirement + Test	Result - Remark	Verdict
3.2.1.1	In **Ireland**, apparatus which is fitted with a flexible cable or cord and is designed to be connected to a mains socket conforming to I.S. 411 by means of that flexible cable or cord and plug, shall be fitted with a 13 A plug in accordance with Statutory Instrument 525:1997 - National Standards Authority of Ireland (section 28) (13 A Plugs and Conversion Adaptors for Domestic Use) Regulations 1997.		N/A
3.2.4	In **Switzerland**, for requirements see 3.2.1.1 of this annex.		N/A
3.2.5.1	In the **United Kingdom**, a power supply cord with conductor of 1,25 mm2 is allowed for equipment with a rated current over 10 A and up to and including 13 A.		N/A
3.3.4	In the **United Kingdom**, the range of conductor sizes of flexible cords to be accepted by terminals for equipment with a RATED CURRENT of over 10 A up to and including 13 A is: • 1,25 mm^2 to 1,5 mm^2 nominal cross-sectional area.		N/A
4.3.6	In the **United Kingdom**, the torque test is performed using a socket outlet complying with BS 1363 part 1:1995, including Amendment 1:1997 and Amendment 2:2003 and the plug part of DIRECT PLUG-IN EQUIPMENT shall be assessed to BS 1363: Part 1, 12.1, 12.2, 12.3, 12.9, 12.11, 12.12, 12.13, 12.16 and 12.17, except that the test of 12.17 is performed at not less than 125 °C. Where the metal earth pin is replaced by an Insulated Shutter Opening Device (ISOD), the requirements of clauses 22.2 and 23 also apply.		N/A
4.3.6	In **Ireland**, DIRECT PLUG-IN EQUIPMENT is known as plug similar devices. Such devices shall comply with Statutory Instrument 526:1997 - National Standards Authority of Ireland (Section 28) (Electrical plugs, plug similar devices and sockets for domestic use) Regulations, 1997.		N/A

IEC60950_1C - ATTACHMENT			
Clause	Requirement + Test	Result - Remark	Verdict

ZB ANNEX (normative) SPECIAL NATIONAL CONDITIONS (EN)			
Clause	Requirement + Test	Result - Remark	Verdict
5.1.7.1	In **Finland**, **Norway** and **Sweden** TOUCH CURRENT measurement results exceeding 3,5 mA r.m.s. are permitted only for the following equipment: • STATIONARY PLUGGABLE EQUIPMENT TYPE A that is intended to be used in a RESTRICTED ACCESS LOCATION where equipotential bonding has been applied, for example, in a telecommunication centre; and has provision for a permanently connected PROTECTIVE EARTHING CONDUCTOR; and is provided with instructions for the installation of that conductor by a SERVICE PERSON; • STATIONARY PLUGGABLE EQUIPMENT TYPE B; • STATIONARY PERMANENTLY CONNECTED EQUIPMENT.		N/A
6.1.2.1 (A1:2010)	In **Finland**, **Norway** and **Sweden**, add the following text between the first and second paragraph of the compliance clause: If this insulation is solid, including insulation forming part of a component, it shall at least consist of either - two layers of thin sheet material, each of which shall pass the electric strength test below, or - one layer having a distance through insulation of at least 0,4 mm, which shall pass the electric strength test below. Alternatively for components, there is no distance through insulation requirements for the insulation consisting of an insulating compound completely filling the casing, so that CLEARANCES and CREEPAGE DISTANCES do not exist, if the component passes the electric strength test in accordance with the compliance clause below and in addition - passes the tests and inspection criteria of 2.10.11 with an electric strength test of 1,5 kV multiplied by 1,6 (the electric strength test of 2.10.10 shall be performed using 1,5 kV), and - is subject to ROUTINE TESTING for electric strength during manufacturing, using a test voltage of 1,5 kV.		N/A

IEC60950_1C - ATTACHMENT			
Clause	Requirement + Test	Result - Remark	Verdict

ZB ANNEX (normative) SPECIAL NATIONAL CONDITIONS (EN)			
Clause	Requirement + Test	Result - Remark	Verdict
	It is permitted to bridge this insulation with an optocoupler complying with 2.10.5.4 b). It is permitted to bridge this insulation with a capacitor complying with EN 60384-14:2005, subclass Y2. A capacitor classified Y3 according to EN 60384-14:2005, may bridge this insulation under the following conditions: - the insulation requirements are satisfied by having a capacitor classified Y3 as defined by EN 60384-14, which in addition to the Y3 testing, is tested with an impulse test of 2,5 kV defined in EN 60950-1:2006, 6.2.2.1; - the additional testing shall be performed on all the test specimens as described in EN 60384-14: - the impulse test of 2,5 kV is to be performed before the endurance test in EN 60384-14, in the sequence of tests as described in EN 60384-14.		N/A
6.1.2.2	In **Finland**, **Norway** and **Sweden**, the exclusions are applicable for PERMANENTLY CONNECTED EQUIPMENT, PLUGGABLE EQUIPMENT TYPE B and equipment intended to be used in a RESTRICTED ACCESS LOCATION where equipotential bonding has been applied, e.g. in a telecommunication centre, and which has provision for a permanently connected PROTECTIVE EARTHING CONDUCTOR and is provided with instructions for the installation of that conductor by a SERVICE PERSON.		N/A
7.2	In **Finland**, **Norway** and **Sweden**, for requirements see 6.1.2.1 and 6.1.2.2 of this annex. The term TELECOMMUNICATION NETWORK in 6.1.2 being replaced by the term CABLE DISTRIBUTION SYSTEM.		N/A
7.3	In **Norway** and **Sweden**, for requirements see 1.2.13.14 and 1.7.2.1 of this annex.		N/A
7.3	In **Norway**, for installation conditions see EN 60728-11:2005.		N/A

Report No. 242467

ATTACHMENT: AUSTRALIA / NEW ZEALAND NATIONAL DIFFERENCES
Test results according to Online CB BULLETIN (Last modified date of 2011-05-06)

Clause	Requirements – Test	Result – Remark	Verdict
ZZ.1 Introduction This Appendix sets out variations and additional requirements to cover issues which have not been addressed by the International Standard. These variations indicate national variations for purposes of the IECEE CB System and will be published in the IECEE CB Bulletin.			
ZZ.2 Variations The variations are as follows:			
1.2	Insert the following between 'person, service' and 'range, rated frequency': **POTENTIAL IGNITION SOURCE** 1.2.12		N/A
1.2.12.201	Insert a new Clause 1.2.12.201 after Clause 1.2.12.15 as follows: **1.2.12.201** **POTENTIAL IGNITION SOURCE** Possible fault which can start a fire if the open-circuit voltage measured across an interruption or faulty contact exceeds a value of 50 V (peak) a.c. or d.c. and the product of the peak value of this voltage and the measured r.m.s. current under normal operating conditions exceeds 15 VA. Such a faulty contact or interruption in an electrical connection includes those which may occur in **CONDUCTIVE PATTERNS** on **PRINTED BOARDS.** NOTE 201 An electronic protection circuit may be used to prevent such a fault from becoming a **POTENTIAL IGNITION SOURCE.** NOTE 202 This definition is from AS/NZS 60065:2003.		N/A
1.5.1	1. *Add* the following to the end of first paragraph: 'or the relevant Australian/New Zealand Standard'. 2. In NOTE 1, add the following after the word 'standard': 'or an Australian/New Zealand Standard'	All critical components are IEC or UL certified.	P
1.5.2	*Add* the following to the end of first and third dash items: 'or the relevant Australian/New Zealand Standard'.	All critical components are IEC or UL certified.	P

<table>
<tr><td>3.2.5.1</td><td>

Modify Table 3B as follows:

1. *Delete* the first four rows and replace with the following:

<table>
<tr><th rowspan="2">RATED CURRENT OF EQUIPMENT A</th><th colspan="2">Minimum conductor sizes</th></tr>
<tr><th>Nominal cross-sectional area mm²</th><th>AWG or kcmil [cross-sectional area in mm²] see note 2</th></tr>
<tr><td>Over 0.2 up to and including 3</td><td>0,5 [1]</td><td>18 [0,8]</td></tr>
<tr><td>Over 3 up to and including 7.5</td><td>0,75</td><td>16 [1,3]</td></tr>
<tr><td>Over 7.5 up to and including 10</td><td>(0,75)[2] 1,00</td><td>16 [1,3]</td></tr>
<tr><td>Over 10 up to and including 16</td><td>(1,0)[3] 1,5</td><td>14 [2]</td></tr>
</table>

Replace footnote 1) with the following:

[1] This nominal cross-sectional area is only allowed for Class II appliances if the length of the power supply cord, measured between the point where the cord, or cord guard, enters the appliance, and the entry to the plug does not exceed 2 m (0.5 mm² three-core supply flexible cords are not permitted; see AS/NZS 3191).

2. Delete Note 1.

3. *Delete* Footnote a and replace with the following:

[a] This nominal cross-sectional area is only allowed for Class II appliances if the length of the power supply cord, measured between the point where the cord, or cord guard, enters the appliance, and the entry to the plug does not exceed 2 m (0,5 mm2 three-core supply flexible cords are not permitted; see AS/NZS 3191).

</td><td></td><td>N/A</td></tr>
<tr><td>4.1.201</td><td>

Insert a new Clause 4.1.201 after Clause 4.1 as follows:

4.1.201 Display devices used for television purposes

Display devices which may be used for television purposes, with a mass of 7 kg or more, shall comply with the requirements for stability and mechanical hazards, including the additional stability requirements for television receivers, specified in AS/NZS 60065.

</td><td>No such devices.</td><td>N/A</td></tr>
<tr><td>4.3.6</td><td>

Delete the third paragraph and *Replace* with the following:

Equipment with a plug portion, suitable for insertion into a 10 A 3-pin flat-pin socket-outlet complying with AS/NZS 3112, shall comply with the requirements in AS/NZS 3112 for equipment with integral pins for insertion into socket-outlets.

</td><td></td><td>N/A</td></tr>
<tr><td>4.3.13.5</td><td>

Add the following to the end of first paragraph:

‘or AS/NZS 2211.1’.

</td><td>No Laser used.</td><td>N/A</td></tr>
<tr><td>4.7</td><td>

Add the following paragraph to the end of the clause:

For alternative tests refer to Clause 4.7.201.

</td><td>Alternative tests not performed.</td><td>N/A</td></tr>
</table>

4.7.201	*Insert* a new Clause 4.7.201 after Clause 4.7.3.6 as follows: **4.7.201 Resistance to fire – Alternative tests** **4.7.201.1 General** Parts of non-metallic material shall be resistant to ignition and spread of fire. This requirement does not apply to decorative trims, knobs and other parts unlikely to be ignited or to propagate flames originating from inside the apparatus, or the following: (a) Components that are contained in an enclosure having a flammability category of V-0 according to AS/NZS 60695.11.10 and having openings only for the connecting wires filling the openings completely, and for ventilation not exceeding 1 mm in width regardless of length. (b) The following parts which would contribute negligible fuel to a fire: - small mechanical parts, the mass of which does not exceed 4g, such as mounting parts, gears, cams, belts and bearings; - small electrical components, such as capacitors with a volume not exceeding 1,750mm^3, integrated circuits, transistors and optocoupler packages, if these components are mounted on material of flammability category V-1, or better, according to AS/NZS 60695.11.10. **NOTE** In considering how to minimize propagation of fire and what 'small parts' are, account should be taken of the cumulative effect of small parts adjacent to each other for the possible effect of propagating fire from one part to another. Compliance shall be checked by the tests of 4.7.201.2, 4.7.201.3, 4.7.201.4 and 4.7.201.5. For the base material of printed boards, compliance shall be checked by the test of 4.7.201.5. The tests shall be carried out on parts of non-metallic material which have been removed from the apparatus. When the glow-wire test is carried out, the parts shall be placed in the same orientation as they would be in normal use. These tests are not carried out on internal wiring. **4.7.201.2 Testing of non-metallic materials** Parts of non-metallic material shall be subject to the glow-wire test of AS/NZS 60695.2.11 which shall be carried out at 550°C.		N/A

4.7.201	**4.7.201.3 Testing of insulating materials** Parts of insulating material supporting **POTENTIAL IGNITION SOURCES** shall be subject to the glow-wire test of AS/NZS 60695.2.11 which shall be carried out at 750°C The test shall also be carried out on other parts of insulating material which are within a distance of 3 mm of the connection. NOTE: Contacts in components such as switch contacts are considered to be connections. For parts which withstand the glow-wire test but produce a flame, other parts above the connection within the envelope of a vertical cylinder having a diameter of 20 mm and a height of 50 mm shall be subjected to the needle-flame test. However, parts shielded by a barrier which meets the needle-flame test shall not be tested. The needle-flame test shall be made in accordance with AS/NZS 60695.11.5 with the following modifications:		N/A

Clause of AS/NZS 60695.11.5	Change
9 Test procedure	
9.2 Application of needle-flame	*Replace* the first paragraph with: The specimen shall be arranged so that the flame can be applied to a vertical or horizontal edge as shown in the examples of figure 1. If possible the flame shall be applied at least 10 mm from a corner *Replace* the second paragraph with: The duration of application of the test flame shall be 30 s ±1 s.
9.3 Number of test specimens	*Replace* with: The test shall be made on one specimen. If the specimen does not withstand the test, the test may be repeated on two further specimens, both of which shall withstand the test.
11 Evaluation of test results	*Replace* with: The duration of burning (t_b) shall not exceed 30 s. However, for printed circuit boards, it shall not exceed 15 s.

IECEE and Standards Australia internal use only. Licensed to IECEE on 04 May 2011 for Committee IECEE and Standards Australia internal use only. Licensed to IECEE on 04 May 2011 for Committee IECEE and Standards Australia internal use only. Licensed to IECEE on 04 May 2011 for Committee IECEE and

The needle-flame test shall not be carried out on parts of material classified as V-0 or V-1 according to AS/NZS 60695.11.10, provided that the sample tested was not thicker than the relevant part.

4.7.201	**4.7.201.4 Testing in the event of non-extinguishing material** If parts, other than enclosures, do not withstand the glow wire tests of 4.7.201.3, by failure to extinguish within 30 s after the removal of the glowwire tip, the needle-flame test detailed in 4.7.201.3 shall be made on all parts of non-metallic material which are within a distance of 50 mm or which are likely to be impinged upon by flame during the tests of 4.7.201.3. Parts shielded by a separate barrier which meets the needle-flame test need not be tested. NOTE 1 If the enclosure does not withstand the glow-wire test the equipment is considered to have failed to meet the requirements of Clause 4.7.201 without the need for consequential testing. NOTE 2 If other parts do not withstand the glow-wire test due to ignition of the tissue paper and if this indicates that burning or glowing particles can fall onto an external surface underneath the equipment, the equipment is considered to have failed to meet the requirements of Clause 4.7.201 without the need for consequential testing. NOTE 3 Parts likely to be impinged upon by the flame are considered to be those within the envelope of a vertical cylinder having a radius of 10 mm and a height equal to the height of the flame, positioned above the point of the material supporting, in contact with, or in close proximity to, connections.		N/A

4.7.201	**4.7.201.5 Testing of printed boards** The base material of printed boards shall be subjected to the needle-flame test of Clause 4.7.201.3. The flame shall be applied to the edge of the board where the heat sink effect is lowest when the board is positioned as in normal use. The flame shall not be applied to an edge, consisting of broken perforations, unless the edge is less than 3 mm from a **POTENTIAL IGNITION SOURCE.** The test is not carried out if the – - Printed board does not carry any **POTENTIAL IGNITION SOURCE**; - Base material of printed boards, on which the available apparent power at a connection exceeds 15 VA operating at a voltage exceeding 50 V and equal or less than 400 V (peak) a.c. or d.c. under normal operating conditions, is of flammability category V-1 or better according to AS/NZS 60695.11.10, or the printed boards are protected by an enclosure meeting the flammability category V-0 according to AS/NZS 60695.11.10, or made of metal, having openings only for connecting wires which fill the openings completely; or - Base material of printed boards, on which the available apparent power at a connection exceeds 15 VA operating at a voltage exceeding 400 V (peak) a.c. or d.c. under normal operating conditions, and base material of printed boards supporting spark gaps which provides protection against overvoltages, is of flammability category V-0 according to AS/NZS 60695.11.10 or the printed boards are contained in a metal enclosure, having openings only for connecting wires which fill the openings completely. Compliance shall be determined using the smallest thickness of the material. NOTE: Available apparent power is the maximum apparent power which can be drawn from the supplying circuit through a resistive load whose value is chosen to maximise the apparent power from more than 2 min when the circuit supplied is disconnected.		N/A
6.2.2	For Australia only, *delete* the first paragraph and Note, and replace with the following: In Australia only, compliance with 6.2.2 shall be checked by the tests of both 6.2.2.1 and 6.2.2.2.		N/A

6.2.2.1	For Australia only, *delete* the first paragraph including the Notes, and *replace* with the following: In Australia only, the electrical separation is subjected to 10 impulses of alternating polarity, using the impulse test generator reference 1 of Table N.1. The interval between successive impulses is 60 s and the initial voltage, Uc, is: (i) for 6.2.1 a): 7.0 kV for hand-held telephones and for headsets and 2.5 kV for other equipment; and (ii) for 6.2.1 b) and 6.2.1 c): 1.5 kV. NOTE 201 The 7 kV impulse simulates lightning surges on typical rural and semi-rural network lines. NOTE 202 The value of 2.5 kV for 6.2.1 a) was chosen to ensure the adequacy of the insulation concerned and does not necessarily simulate likely overvoltages.		N/A
6.2.2.2	For Australia only, *delete* the second paragraph including the Note, and *replace* with the following: In Australia only, the a.c. test voltage is: (i) for 6.2.1 a): 3 kV; and (ii) for 6.2.1 b) and 6.2.1 c): 1.5 kV. NOTE 201 Where there are capacitors across the insulation under test, it is recommended that d.c. test voltages are used. NOTE 202 The 3 kV and 1.5 kV values have been determined considering the low frequency induced voltages from the power supply distribution system.		N/A
7.3	*Add* the following before the first paragraph: Equipment providing functions that fall only within the scope of AS/NZS 60065 and that incorporate a PSTN interface, are not required to comply with this Clause where the only ports provided on the equipment, in addition to a coaxial cable connection and a PSTN interface, are audio or video ports and analogue or data ports not intended to be used for telecommunications purposes.		N/A
Annex P	*Add* the following Normative References: AS/NZS 3191, Electric flexible cords AS/NZS 3112, Approval and test specification—Plugs and socket-outlets		N/A

Index	1. *Insert* the following between ‘asbestos, not to be used as insulation’ and ‘attitude see orientation’: AS/NZS 2211.1.....4.3.13.5 AS/NZS 3112.....4.3.6 AS/NZS 3191..... 3.2.5.1 (Table 3B) AS/NZS 60064.....4.1.201 AS/NZS 60695.2.11..... 4.7.201.2, 4.7.201.3 AS/NZS 60695.11.10..... 4.7.201.1, 4.7.201.5 AS/NZS 60695.11.5.....4.7.201.3 2. Insert the following between ‘positive temperature coefficient (PTC) device’ and ‘powder’: potential ignition source 1.2.201, 4.7.201.3, 4.7.201.5		—

IEC 60950_1C ATTACHMENT			
Clause	Requirement + Test	Result - Remark	Verdict

ATTACHMENT TO TEST REPORT IEC 60950-1
CANADA NATIONAL DIFFERENCES
Information technology equipment – Safety –
Part 1: General requirements

Differences according to.....: CAN/CSA-C22.2 NO. 60950-1A-07

Attachment Form No.....: CA_ND_IEC60950_1C

Attachment Originator .....: TÜV SÜD Product Service GmbH

Master Attachment.....: Date (2012-08)

Copyright © 2012 IEC System for Conformity Testing and Certification of Electrical Equipment (IECEE), Geneva, Switzerland. All rights reserved.

	Special national conditions		
1.1.1	All equipment is to be designed to allow installation in accordance with the National Electrical Code (NEC), ANSI/NFPA 70, the Canadian Electrical Code (CEC), Part I, CAN/CSA C22.1, and when applicable, the National Electrical Safety Code, IEEE C2.	Class III equipment.	N/A
	Also, unless marked or otherwise identified, installation is allowed per the Standard for the Protection of Electronic Computer/Data-Processing Equipment, ANSI/NFPA 75.		N/A
1.4.14	For Pluggable Equipment Type A, the protection in the installation is assumed to be 20A.	Class III equipment.	N/A
1.5.5	For lengths exceeding 3.05 m, external interconnecting flexible cord and cable assemblies are required to be a suitable cable type (e.g., DP, CL2) specified in the CEC/NEC.		N/A
	For lengths 3.05 m or less, external interconnecting flexible cord and cable assemblies that are not types specified in the CEC are required to have special construction features and identification markings.		N/A
1.7.1	Equipment for use on a.c. mains supply systems with a neutral and more than one phase conductor (e.g. 120/240 V, 3-wire) require a special marking format for electrical ratings.	Class III equipment.	N/A
	A voltage rating that exceeds an attachment plug cap rating is only permitted if it does not exceed the extreme operating conditions in Table 2 of CAN/CSA C22.2 No. 235, and		N/A
	- if it is part of a range that extends into the Table 2 "Normal Operating Conditions."		N/A

IEC 60950_1C ATTACHMENT			
Clause	Requirement + Test	Result - Remark	Verdict
	A voltage rating is not be lower than the specified "Normal Operating Conditions," unless it is part of a range that extends into the "Normal Operating Conditions."		N/A
1.7.7	Wiring terminals intended to supply Class 2 outputs in accordance with CEC Part 1 or NEC are marked with the voltage rating and “Class 2” or equivalent.	No such terminals.	N/A
	- Marking is located adjacent to the terminals		N/A
	- Marking is visible during wiring		N/A
2.5	Fuse providing Class 2, Limited Power Source, or TNV current limiting is not operator-accessible unless it is not interchangeable.	No such fuse.	N/A
2.6.3.3	Modify first column on Table 2D to “Smaller of the RATED CURRENT of the equipment or the PROTECTIVE CURRENT RATING of the circuit under consideration.”		N/A
2.7.1	Suitable NEC/CEC branch circuit protection rated at the maximum circuit rating is provided for all standard supply outlets and receptacles (such as supplied in power distribution units) if the supply branch circuit protection is not suitable.		N/A
	Power distribution transformers distributing power at 100 volts or more, and rated 10 kVA or more, provided with special transformer overcurrent protection.		N/A
3.2	Wiring methods (terminals, leads, etc.) used for the connection of the equipment to the mains is in accordance with the NEC/CEC.	Class III equipment.	N/A
3.2.1	Attachment plugs of power supply cords are rated not less than 125 percent of the rated current of the equipment.		N/A
3.2.1.2	Equipment connected to a centralized d.c. power system, and having one pole of the DC mains input terminal connected to the main protective earthing terminal in the equipment comply with special earthing, wiring, marking and installation instruction requirements.		N/A
3.2.3	Permanent connection of equipment to the mains supply by a power supply cord is not permitted, except for certain equipment, such as ATMs.		N/A
3.2.5	Power supply cords are no longer than 4.5 m in length.		N/A

IEC 60950_1C ATTACHMENT			
Clause	Requirement + Test	Result - Remark	Verdict
	Minimum cord length is 1.5 m, with certain constructions such as external power supplies allowed to consider both input and output cord lengths into the requirement.		N/A
	Flexible power supply cords are compatible with Article 400 of the NEC, and Tables 11 and 12 of the CEC.		N/A
3.2.9	Permanently connected equipment have a suitable wiring compartment and wire bending space.		N/A
3.3	Wiring terminals and associated spacings for field wiring connections comply with CSA C22.2 No. 0.		N/A
3.3.3	Wire binding screws are not permitted to attach conductors larger than 10 AWG (5.3 mm2).		N/A
3.3.4	Terminals for permanent wiring, including protective earthing terminals, are suitable for Canadian/US wire gauge sizes, are		N/A
	- rated 125 percent of the equipment rating, and		N/A
	- are specially marked when specified (1.7.7).		N/A
3.3.5	Revise first column of Table 3E to “Smaller of the RATED CURRENT of the equipment or the PROTECTIVE CURRENT RATING of the circuit under consideration.”		N/A
3.4.2	Motor control devices are provided for cord-connected equipment with a motor if the equipment is rated more than 12 A,	No motor.	N/A
	- or if the motor has a nominal voltage rating greater than 120 V		N/A
	- or is rated more than 1/3 hp (locked rotor current over 43 A)		N/A
3.4.8	Vertically-mounted disconnect switches and circuit breakers have the "on" position indicated by the handle in the up position.		N/A
3.4.11	For computer room applications, equipment with battery systems capable of supplying 750 VA for five minutes have a battery disconnect means that may be connected to the computer room remote power-off circuit.	No such battery.	N/A
4.3.12	The maximum quantity of flammable liquid stored in equipment complies with NFPA 30.	No flammable liquids within the equipment.	N/A
4.3.13.5	Equipment with lasers meet the Canadian Radiation Emitting Devices Act, REDR C1370 and/or Code of Federal Regulations 21 CFR 1040, as applicable.		N/A

IEC 60950_1C ATTACHMENT			
Clause	Requirement + Test	Result - Remark	Verdict
4.7	For computer room applications, automated information storage systems with combustible media greater than 0.76 m^3 (27 cu ft) have a provision for connection of either automatic sprinklers or a gaseous agent extinguishing system with an extended discharge.	The equipment has no combustible area greater than 27 cubic feet.	N/A
4.7.3.1	For computer room applications, enclosures with combustible material measuring greater than 0.9 m^2 (10 sq ft) or a single dimension greater than 1.8 m (6 ft) have a flame spread rating of 50 or less.	The equipment has no combustible material greater than 0.9m² or single dimension greater than 1.8m.	N/A
	For other applications, enclosures with the same dimensions require a flame spread rating of 200 or less.		N/A
Annex H	Equipment that produces ionizing radiation comply with the Canadian Radiation Emitting Devices Act, REDR C1370 and/or Code of Federal Regulations, 21 CFR 1020, as applicable.	The equipment does not produce ionizing radiation.	N/A
	Other National Differences		
1.5.1	Some components and materials associated with the risk of fire, electric shock, or personal injury have component or material ratings in accordance with the applicable national (Canadian and/or U.S.) component or material standard requirements.	See safety component list.	P
1.6.1.2	A circuit for connection to the DC Mains Supply is classified as either a SELV Circuit, TNV-2 Circuit or Hazardous Voltage Circuit depending on the maximum operating voltage of the supply.		N/A
	This maximum operating voltage includes consideration of the battery charging “float voltage” associated with the intended supply system, regardless of the marked power rating of the equipment.		N/A
2.3.1	For TNV-2 and TNV-3 circuits with other than ringing signals and with voltages exceeding 42.4 Vpeak or 60 Vd.c., the maximum acceptable current through a 2000 ohm resistor (or greater) connected across the voltage source with other loads disconnected is 7.1 mA peak or 30 mA d.c. under normal operating conditions.	No TNV circuitry.	N/A
2.3.2.1	In the event of a single fault between TNV and SELV circuits, the limits of 2.2.3 apply to SELV Circuits and accessible conductive parts.		N/A
2.6.3.4	Protective bonding conductors of non-standard protective bonding constructions (e.g., printed circuit traces) may be subjected to the additional limited short circuit test conditions specified.		N/A

IEC 60950_1C ATTACHMENT			
Clause	Requirement + Test	Result - Remark	Verdict
4.2.8.1	Enclosures around CRTs with a face diameter of 160 mm or more reduce the risk of injury due to the implosion of the CRT.		N/A
4.3.2	Equipment with handles complies with special loading tests.		N/A
5.1.8.3	Equipment intended to receive telecommunication ringing signals comply with a special touch current measurement tests.		N/A
5.3.7	Internal (e.g., card cage) SELV circuit connectors and printed wiring board connectors that are accessible to the operator and that deliver power are overloaded.	No such connector delivering power.	N/A
	During abnormal operating testing, if a circuit is interrupted by the opening of a component, the test shall be repeated twice (three tests total) using new components as necessary		N/A
6.4	Equipment intended for connection to telecommunication network outside plant cable is protected against overvoltage from power line crosses in accordance with 6.4 and Annex NAC.		N/A
Annex EE	Articulated accessibility probe (Fig EE.3) is used for assessing accessibility to document/media shredders instead of the Figure 2A test finger.	Not document/media shredder.	N/A
M.2	Continuous ringing signals up to 16 mA only are permitted if the equipment is subjected to special installation and performance restrictions.		N/A
Annex NAD	Equipment connected to a telecommunication and cable distribution networks and supplied with an earphone intended to be held against, or in the ear comply with special acoustic pressure requirements.		N/A

IEC 60950_1A ATTACHMENT			
Clause	Requirement + Test	Result - Remark	Verdict

ATTACHMENT TO TEST REPORT IEC 60950-1
CHINA NATIONAL DIFFERENCES
Information technology equipment Safety – Part 1: General requirements

Differences according to.....: GB 4943.1--2011

Attachment Form No.....: CN_ND_IEC60950_1A

Attachment Originator .....: CQC

Master Attachment.....: Date 2012-10

Copyright © 2012 IEC System for Conformity Testing and Certification of Electrical Equipment (IECEE), Geneva, Switzerland. All rights reserved.

	China National Differences		
1.5. 2	Add a note behind the first dashed paragraph. Note: A component used shall comply with related requirements corresponding altitude of 5000m. CQC requirement clarification (September, 2012) : A component shall comply with the clearance requirements for altitudes up to 5000m. The requirement applies also for inner clearances / creepage distances.	The equipment can be used at altitude up to 5000m.	P
1.7	Add a paragraph before the last paragraph: The required marking and instruction should be given in normative Chinese unless otherwise specified.	Shall be provided when marketing in china.	—
1.7.1	Amend dashed paragraph at the fifth paragraph : The RATED VOLTAGE should be 220V (single phase) or 380V (three-phases) for single rated voltage, for RATED VOLTAGE RANGE, it should cover 220V or 380V (three-phases), for multiple RATED VOLTAGES, one of them should be 220V or 380V (three-phases) and set on 220V or 380V (three-phases) when manufactured. And the RATED FREQUENCY or RATED FREQUENCY RANGE should be 50Hz or include 50Hz.	Class III equipment, supplied from external adapter.	N/A

IEC 60950_1A ATTACHMENT			
Clause	Requirement + Test	Result - Remark	Verdict
1.7.2.1	Add requirements of warning for equipment intended to be used at altitude not exceeding 2000m or at non-tropical climate regions: For equipment intended to be used at altitude not exceeding 2000m, a warning label containing the following or a similar appropriate wording, or a symbol as in annex DD shall fixed to the equipment at readily visible place. "Only used at altitude not exceeding 2000m." For equipment intended to be used in not-tropical climate regions, a warning label containing the following or a similar appropriate wording, or a symbol as in annex DD shall fixed to the equipment at readily visible place. "Only used in not-tropical climate regions." If only the symbol used, the explanation of the symbol shall be contained in the instruction manual. The above statements shall be given in a language acceptable to the regions where the apparatus is intended to be used.	Equipment intended used at altitude up to 5000m. Rated max. ambient temperature: 55℃.	P
2.7.1	Amended the first paragraph as: Protection in PRIMARY CIRCUITS against overcurrent short-circuits and earth faults shall be provided as an integral part of the equipment except special provisions. And the protective device shall meet the requirement of Clause 5.3. Delete note of Clause 2.7.1. CQC requirement clarification (September, 2012) : Except for Pluggable Equipment Type B and Permanently Connected Equipment shall the protective device be included as parts of the equipment.	Class III equipment.	N/A

IEC 60950_1A ATTACHMENT			
Clause	Requirement + Test	Result - Remark	Verdict
2.9.2	First section of Clause 2.9.2 amended as two sections: Where required by 2.9.1, 2.10.8.3, 2.10.10 or 2.10.11, humidity conditioning is conducted for 120 h in a cabinet or room containing air with ambient temperature 40±2℃ and a relative humidity of (93±3)%. During this conditioning the component or subassembly is not energized. For equipment not to be operated at tropical climatic conditions, Where required by 2.9.1, 2.10.8.3, 2.10.10 or 2.10.11, humidity conditioning is conducted for 48 h in a cabinet or room containing air with a relative humidity of (93±3) %. The temperature of the air, at all places where samples can be located, is maintained within 2 °C of any convenient value between 20 °C and 30 °C such that condensation does not occur. Due to pretreatment of equipment operated at high altitude area is humidity conditioning withstand hot shock, specific requirements are to be considered. CQC requirement clarification (September, 2012) : Ref. the following text above : *"Due to pretreatment of equipment operated at high altitude area is humidity conditioning withstand hot shock, specific requirements are to be considered."* These requirements are to be considered and are not covered by clause 2.9.2 of GB 4943.1-2011. Add note: For equipment to be operated at 2000 m - 5000m above sea level, assessment and requirement of humidity conditioning for Insulation material properties are considered.	Class III equipment.	N/A

IEC 60950_1A ATTACHMENT			
Clause	Requirement + Test	Result - Remark	Verdict
2.10.3.1	Amend the third paragraph of Clause 2.10.3.1 to be: These requirements apply for equipment to be operated up to 2000 m above sea level. For equipment to be operated at more than 2000 m above sea level and up to 5000m above sea level, the minimum CLEARANCE shall be multiplied by the factor 1.48 corresponding altitude of 5000m given in Table A.2 of IEC 60664-1. For equipment to be operated at more than 5000 m above sea level, the minimum CLEARANCE shall be multiplied by the factor given in Table A.2 of IEC 60664-1. Linear interpolation is permitted between the nearest two points in Table A.2. The calculated minimum CLEARANCE using this multiplication factor shall be rounded up to the next higher 0,1 mm increment.	Class III equipment.	N/A
2.10.3.3& 2.10.3.4	Add "(applicable for altitude up to 2000m)" in header of Table 2K、2L and 2M.		N/A
2.10.3.4	Add a new section above Table 2K and in Clause 2.10.3.4: Minimum CLEARANCES determined by above rules apply for equipment to be operated up to 2000m above sea level. For equipment operated at 2000 m - 5000m above sea level, the minimum CLEARANCE shall be multiplied by the factor 1.48 corresponding altitude of 5000m given in Table A.2 of GB/T16935.1（IEC 60664-1）. For equipment to be operated at more than 5000 m above sea level, the minimum CLEARANCE shall be multiplied by the factor given in Table A.2 of GB/T16935.1. CQC requirement clarification (September, 2012) : Misprint of above reference “Table 2K”. The reference shall be “Table 2M”.		N/A
3.2.1.1	Add a paragraph before the last paragraph: Plugs connected to AC mains supply shall comply with GB 1002 or GB 1003 or GB/T 11918 as applicable.	Class III equipment.	N/A
4.2.8	Clause 4.2.8 cathode ray tubes quoted Clause 18 of GB8898-2011. Delete note of Clause 4.2.8.	No CRT.	N/A

IEC 60950_1A ATTACHMENT			
Clause	Requirement + Test	Result - Remark	Verdict
Annex E	Amend last section: For comparison of winding temperatures determined by the resistance method of this annex with the temperature limits of Table 4B, 35 °C shall be added to the calculated temperature rise. Add note: for equipment not to be operated at tropical climatic conditions, 25 °C shall be added to the calculated temperature rise to compare with the temperature of Table 4B.		N/A
Annex G.6	Change the second section of Clause G.6 to be: For equipment to be operated at 2000 m - 5000m above sea level, the minimum CLEARANCE shall be multiplied by the factor 1.48 corresponding altitude of 5000m given in Table A.2 of GB/T16935.1. For equipment to be operated at more than 5000 m above sea level, the minimum CLEARANCE shall be multiplied by the factor given in Table A.2 of IEC 60664-1. Linear interpolation is permitted between the nearest two points in Table A.2. The calculated minimum CLEARANCE using this multiplication factor shall be rounded up to the next higher 0,1 mm increment.	Class III equipment.	N/A
Annex DD (normative)	Added annex DD: Instructions for the new safety warning labels. DD.1 Altitude warning label Meaning of the label: Evaluation for apparatus only based on altitude not exceeding 2000m, therefor it's the only operating condition applied for the equipment .There may be some potential safety hazard if the equipment is used at altitude above 2000m. DD.2 Climate warning label Meaning of the label: Evaluation for apparatus only based on temperate climate condition, therefor it's the only operating condition applied for the equipment .There may be some potential safety hazard if the equipment is used in tropical climate region.	Equipment intended used at altitude up to 5000m. Rated max. ambient temperature: 55℃.	N/A
Annex EE (informative)	Added annex EE: Illustration relative to safety explanation in normative Chinese、Tibetan、Mongolian、Zhuang Language and Uighur.	Must be considered before marketed in China.	—

IEC 60950_1A ATTACHMENT			
Clause	Requirement + Test	Result - Remark	Verdict

	Special national conditions		
1.1.2	GB4943.1-2011 applies to equipment used at altitudes not exceeding 5000m above sea level, primarily in regions with moderate or tropical climates. Revise the third dashed paragraph of 1.1.2 as: ——equipment intended to be used in vehicles, on board ships or aircraft, at altitudes greater than 5000m; CQC requirement clarification (September, 2012) : The Chinese standard (GB 4943.1-2011) sets requirements for altitudes up to 5000m.	Rated altitude UP TO 5000m.	P
1.4.5	Amend the second paragraph by the following: If the equipment is intended for direct connection to an AC mains supply, the tolerances on RATED VOLTAGE shall be taken as +10% and -10%.	Class III equipment.	N/A
1.4.12.1	Tma: The maximum ambient temperature permitted by the manufacturer's specification, or 35 °C, whichever is greater. Add note 1: For equipment not to be operated at tropical climatic conditions, Tma is the maximum ambient temperature permitted by the manufacturer's specification, or 25 °C, whichever is greater. Add note 2: For equipment to be operated at 2000m-5000m above sea leave, its temperature test conditions and temperature limits are under consideration.	Rated max. ambient temperature 55°C.	P

SI 60950 Part 1 (2009)			
Clause	Requirement + Test	Result - Remark	Verdict

ATTACHMENT: NATIONAL DIFFERENCES – ISRAEL Test results according to Online CB BULLETIN (Last modified date of 2011-03-02)			
1.7	**Marking and instructions** The clause is applicable with the following additions: - Subclause 1.7.201 shall be added at the beginning of the clause as follows:		—
1.7.201	**Marking in the Hebrew language** The marking in the Hebrew language shall be in accordance with the Consumer Protection Order (Marking of goods), 1983. In addition to the marking required by claus e I.7.1, the following details shall be marked in the Hebrew language. The details shall be marked on the apparatus or on its package, or on a label properly attached to the apparatus or on the package, by bonding or sewing, in a manner that the label cannot be easily removed. 1. Name of the apparatus and it commercial designation; 2. Manufacturer's name and address. If the apparatus is imported, the importer's name and address; 3. Manufacturer's registered trademark, if any; 4. Name of the model and serial number, if any; 5. Country of manufacture.	Must be considered before marketed in Israel.	—
1.7.2	**Safety instructions and Marking** **1.7.2.1 General** The following shall be added to the clause: All the instructions and warnings related to safety shall also be written in the Hebrew language.	Must be considered before marketed in Israel.	—
2.	**Protection from Hazards** The clause is applicable with the following additions:		—

SI 60950 Part 1 (2009)			
Clause	Requirement + Test	Result - Remark	Verdict
2.9.4	Separation from hazardous voltages The following shall be added at the beginning of the clause : In Israel, according to the Electricity Law, 1954, and the Electricity Regulations (Earthing and means of protection against electricity of voltages up to 1,000V) 1991, seven means of protection against electrocution are permitted, as follows: 1) TN-S - Network system earthing; TN-C-S - Network system earthing; 2) TT - Network system earthing; 3) IT - Network Insulation Terre; 4) Isolated transformer; 5) Safety extra low voltage (SELV or ELV) ; 6) Residual current circuit breaker (30 rna =I△); 7) Reinforced insulation; Double insulation (class II) ⧈. Clause 2.201 shall be added at the end of the clause, as follows:	Class III equipment.	N/A
2.201	Prevention of electromagnetic interference - Prior to carrying out the tests in accordance with the clauses of this Standard, the compliance of the apparatus with the relevant requirements specified in the appropriate part of the Standard series, SI 961, shall be checked. **The apparatus shall meet the requirements in the appropriate part of the Standard series.** SI 961. - **If there are components in the apparatus for the prevention of electromagnetic interference,** these components shall not reduce the safety level of the apparatus as required by this Standard.	Compliance with EMC must be considered before marketed in Israel.	—
3.	**Wiring, connections and supply** The clause is applicable with the following additions:		—
3.2	**Connection to a mains supply**		—
3.2.1	**Means of connection**		—
3.2.1.1	**Connection to an a.c. mains supply** After the note, the following note shall be added: Note: **In Israel, the feed plug shall comply with the requirements of Israel Standard 51 32 Part I.**		N/A
3.2.1.2	**Connection to a d.c. mains supply** At the end of the first paragraph, the following note shall be added: Note: At the time of issue of this Standard, there is no Israel Standard for connection accessories to d.c.		N/A

SI 60950 Part 1 (2009)			
Clause	Requirement + Test	Result - Remark	Verdict

ANNEX P

Normative references

The annex is applicable with the following national deviations:

- The following Israel Standards have been inserted in place of some of the International Standards specifie d in this annex of the Standard, as follows:

The referenced International Standard	The substituted Israel Standard	Comments
IEC 60065: 2001	SI 250(A) - Safety requirements for mains operated electronic and related apparatus for household and similar general use	The Istael Standard, excluding national deviations in it, is identical to the Standard of the International Electrotechnical Commission, IEC 65:1985, including its amendments
IEC 60227 (all parts)	SI 473, all parts - Cables, cords and insulated conductors for nominal vaItage up to 1000 volt	-
IEC 60309 (all parts)	SI 1109, all parts - Plugs, socket-outlets and couplers for industrial purposes	SI 1109, part I and part 2, excluding national deviations in them, are identical to the Standards of the International Electrotechnical Commission IEC 60309-1·1999 and lEe 60309-2-1999, respectively.
IEC 60317 (all parts)	SI 1067 Part I – Self-fluxing enamelled(B) round copper wires with high mechanical properties	The Israel Standard is identical to the Standard of the International Electrotechnical Commission IEC 317-1 (1980)
	SI 1067 Part 2 – Self-fluxing enamelled(B) round copper wires	The Israel Standard is identical to the Standard of the International Electrotechnical Commission lEC 317-4 (1980)
	SI 1067 Part 3 - Self-fluxing enamelled(B) round copper wires with a temperature index of 180°	The Israel Standard is identical to the Standard of the International Electrotechnical Commission IEC 317-8 (1980)
lEC 60320 (all parts)	SI 60320 Part 1 - Appliance couplers for household and similar general purposes: General requirements	The Israel Standard, excluding national deviations in it, is identical to the Standard of the International Electrotechnical Commission, lEC 60320-1 (2001)
	SI 60320 Part 2.1 - Appliance couplers for household and similar general purposes: Sewing machine couplers	The Israel Standard, excluding national deviations in it, is identical to the Standard of the International Electrotechnical Commission, lEC 60320-2.1 (2000)
lEC 60320 (all parts)	SI 60320 Part 2.2 – Appliance couplers for household and similar general purposes: Interconnection couplers for household and similar equipment	The Israel Standard, excluding national deviations in it, is identical to the Standard of the International Electrotechnical Commission, lEC 60320-2.2 (1998)
	SI 60320 Part 2.3 - Appliance couplers for household and similar general purposes: Interconnection couplers for household and similar equipment Appliance coupler for household and similar general purposes: Appliance coupler with a degree of protection higher than IPXO	The Israel Standard, excluding national deviations in it, is identical to the Standard of the International Electrotechnical Commission, lEC 60320-2.3 (1998)

—

SI 60950 Part 1 (2009)			
Clause	Requirement + Test	Result - Remark	Verdict

ANNEX P

Continued

IEC 60730-1: 1999	SI 60730 Part] - Automatic electrical controls for household and similar use: General requirements	The Israel Standard, excluding national deviations in it, is identical to the Standard of the International Electrotechnical Commission, IEC 60730-1 (1999)
IEC 60825-1	SI 60825 Part I - Safety of laser products: Equipment classification, requirements and user's guide	The Israel Standard, excluding national deviations in it, is identical to the Standard of the International Electrotechnical Commission, IEC 60825-1 (2001).
IEC 60947-[: 2004	SI 60947 Part 1 - Low-voltage switchgear and controlgear: General rules	The Israel Standard, excluding national deviations in it, is identical to Standard of the International Electrotechnical Commission, IEC 60947-[(1999)
IEC 61058-1: 2000	SI 61058 Part I – Switches for appliances: General requirements	The Israel Standard, excluding national deviations in it, is identical to the Standard of the International Electrotechnical Commission, IEC 61058-1 (2001)
ISO 3864 (all parts)	SI 3864 Part 1 -Graphical symbols – Safety colours and safety signs: Design principles for safety signs in workplaces and public areas	The Israel Standard, excluding national deviations in it, is identical to the Standard of the International Electrotechnical Commission IEC 3864-1 (2002)

Notes

(A) This Standard will be replaced by SI 60065 - Audio, video and similar electronic apparatus – safety requirements - that excluding the national deviations indicated is identical to the Standard of the International Electrotechnical Commission IEC 60065 (2005).

(B) Not relevant to the translation.

B. Add the following to the clause:

Israel Standards

SI 32 Part 1.1 - Plugs and socket-outlets for household and s imilar purposes : Plugs andsocket-outlets for single phase up to l6A - Genera l requirements

SI 96 1, all parts - Electromagnetic compatibility

Israel documents

Electricity Law, 1954, its r egulations and revisions

Kovetz Takanot 4465 dated 1983-02-24, Consumer Protection Order (Marking of goods), 1983

—

IEC 60950-1 ATTACHMENT			
Clause	Requirement + Test	Result - Remark	Verdict

ATTACHMENT TO TEST REPORT IEC 60950-1
JAPAN NATIONAL DIFFERENCES

Information technology equipment – Safety – Part 1: General requirements

Differences according to.....: J60950-1(H22)

Attachment Form No.....: JP_ND_IEC60950_1A

Attachment Originator .....:

Master Attachment.....: 2010-11

Copyright © 2010 IEC System for Conformity Testing and Certification of Electrical Equipment (IECEE), Geneva, Switzerland. All rights reserved.

National Differences - Japan			
1.2.4.1	Add the following new NOTE. NOTE Even if the equipment is designed as Class I, the equipment is regarded as Class 0I equipment when a 2-pin adaptor with an earthing lead wire or a cord set having a 2-pin plug with an earthing lead wire is provided or recommended.	Class III equipment.	N/A
1.2.4.3A	Add the following new clause. 1.2.4.3A CLASS 0I EQUIPMENT Equipment having attachment plug without earthing blade, where protection against electric shock is achieved by: - using BASIC INSULATION, and - providing externally an earth terminal or a lead wire for earthing in order to connect those conductive parts that might assume a HAZARDOUS VOLTAGES in the event of BASIC INSULATION fault to the PROTECTIVE EARTHING CONDUCTOR in the building wiring. NOTE Class 0I equipment may have a part constructed with Double Insulation or Reinforced Insulation. circuit.	Class III equipment.	N/A

IEC 60950-1 ATTACHMENT			
Clause	Requirement + Test	Result - Remark	Verdict
1.3.2	Add the following notes after the first paragraph: NOTE 1 Transportable or similar equipment that is relocated frequently for intended usage should not be designed as Class I or Class 0I equipment unless it is intended to be installed by service personnel. NOTE 2 Considering wiring circumstance in Japan, equipment intended to be installed where the provision for earthling connection is unlikely should not be designed as Class I or Class 0I equipment unless it is intended to be installed by service personnel.	Class III equipment.	N/A
1.5.1	Replace the first paragraph with the following: Where safety is involved, components shall comply either with the requirements of this standard or with the safety aspects of the relevant JIS component standard or IEC component standards in case there is no applicable JIS component standard is available. However, in case a component that falls within the scope of the METI Ministerial ordinance (No. 85:1962) is properly used in accordance with its marked ratings, the requirements of 1.5.4, 2.8.7 and 3.2.5 apply, and in addition, a cord connector of power supply cord set matching with an appliance inlet specified in the standard sheets of IEC 60320-1, shall comply with relevant standard sheet of IEC 60320-1. Replace NOTE 1 with the following: NOTE 1 A JIS or an IEC component standard is considered relevant only if the component in question clearly falls within its scope.	All critical components are IEC, UL or CSA certified.	P

IEC 60950-1 ATTACHMENT			
Clause	Requirement + Test	Result - Remark	Verdict
1.5.2	Replace the first sentence in the first dashed paragraph with the following: - a component that has been demonstrated to comply with a JIS component standard harmonized with the relevant IEC component standard, or where such JIS component standard is not available, a component that has been demonstrated to comply with the relevant IEC component standard shall be checked for correct application and use in accordance with its rating. Add a NOTE after the first dashed paragraph as follows: NOTE 1 See 1.7.5A when Type C.14 appliance coupler rated 10 A per IEC 60320-1 is used with an equipment rated not more than 125 V and rated more than 10 A. Replace the first sentence in the third dashed paragraph as follows: - where no relevant IEC component standard or JIS component standard harmonized with the relevant IEC component standard exists, or where components are used in circuits not in accordance with their specified rating, the components shall be tested under the conditions occurring in the equipment.	All critical components are IEC, UL or CSA certified.	P
1.5.6	In this sub-clause, add “JIS C 5101-14:1998 or” before the reference number, IEC 60384-14:1993.	Considered.	N/A
1.5.7.2	In this sub-clause, add “JIS C 5101-14:1998 or” before the reference number, IEC 60384-14:1993.	Considered.	N/A
1.5.8	In the first paragraph, add “JIS C 5101-14:1998 or” before the reference number, IEC 60384-14:1993.	Considered.	N/A
1.7.1	Replace the fifth dashed paragraph with the following: - manufacturer’s or responsible company’s name or trade-mark or identification mark;		P
1.7.5	In the second paragraph, add “or JIS C 8303:2007” after the reference number, IEC/TR 60083:1997”.	Considered.	N/A

IEC 60950-1 ATTACHMENT			
Clause	Requirement + Test	Result - Remark	Verdict
1.7.5A	Add the following new clause after 1.7.5 1.7.5A Appliance Couplers If an appliance coupler according to IEC 60320-1, C.14(rated current: 10 A) is used in equipment whose rated voltage is less than 125 V and the rated current is over 10 A, the following instruction or equivalent shall be described in the user instruction. “ Use only designated cord set attached in this equipment”		N/A
1.7.12	Replace first sentence with the following: Instructions and equipment marking related to safety shall be in Japanese.	Must be considered before marketed in Japan.	—
1.7.17A	Add the following new clause after 1.7.17 1.7.17A Marking for CLASS 0I EQUIPMENT For CLASS 0I EQUIPMENT, the following instruction shall be marked on the visible place of the mains plug or the main body: 必ず接地接続を行って下さい “Provide an earthing connection” Moreover, for CLASS 0I EQUIPMENT, the following or equivalent instruction shall be indicated on the visible place of the main body or written in the operating instructions: 接地接続は必ず、電源プラグを電源につなぐ前に行って下さい。又、接地接続を外す場合は、必ず電源プラグを電源から切り離してから行って下さい。 “Provide an earthing connection before the mains plug is connected to the mains. And, when disconnecting the earthing connection, be sure to disconnect after pulling out the mains plug from the mains.”	Class III equipment.	N/A
2.1.1.1	In item b) of this sub-clause, replace “IEC 60083” with “JIS C 8303:2007 or Article 1 of the Ministerial Ordinance (No. 85:1962)”		N/A
2.6.3.2	Add the following after the first paragraph. This also applies to the conductor of lead wire for protective earthing of CLASS 0I EQUIPMENT.		N/A

IEC 60950-1 ATTACHMENT			
Clause	Requirement + Test	Result - Remark	Verdict
2.6.4.2	Replace the first paragraph with the following. Equipment required to have protective earthing shall have a main protective earthing terminal. For equipment with a DETACHABLE POWER SUPPLY CORD, the earthing terminal in the appliance inlet is regarded as the main protective earthing terminal except for CLASS 0I EQUIPMENT providing separate main protective earthing terminal other than appliance inlet.		N/A
2.6.5.4	Replace the first sentence with the following. Protective earthing connections of CLASS I EQUIPMENT shall make earlier and break later than the supply connections in each of the following:		N/A
2.6.5.8A	Add the following new clause after 2.6.5.8 2.6.5.8A Earthing of CLASS 0I EQUIPMENT Plugs with a lead wire for earthing shall not be used for equipment having a rated voltage exceeding 150 V. For plugs with a lead wire for earthing, the lead wire shall not be earthed by a clip. CLASS 0I EQUIPMENT shall be provided with an earthing terminal or a lead wire for earthing in the external location where easily visible.		N/A
2.10.3.1	In this sub-clause, replace IEC 60664-1 with JIS C 0664:2003.		N/A
2.10.3.2	In the second paragraph, replace IEC 60664-1 with JIS C 0664:2003.		N/A
3.2.3	Add the following after Table 3A: Table 3A applies when cables complying with JIS C 3662 or JIS C 3663 are used. In case of other cables, the cable entries shall be so designed that a conduit suitable for the cable used can be fitted.	Not permanently connected equipment.	N/A

IEC 60950-1 ATTACHMENT			
Clause	Requirement + Test	Result - Remark	Verdict
3.2.5.1	Add the following to the last of first dashed paragraph. Or mains cords shall be of the sheathed type complying with Appendix 1 of Article 1 of the Ministerial Ordinance (No. 85:1962) on stipulating technical requirements for the Electrical Appliance**.** Add the following to the last of second dashed paragraph. Or mains cords shall be of the sheathed type complying with Appendix 1 of Article 1 of the Ministerial Ordinance (No. 85:1962) on stipulating technical requirements for the Electrical Appliance**.** Delete 1) in Table 3B.		N/A
3.3.4	Add the following note to Table 3D: NOTE For cables other than those complying with JIS C 3662 or JIS C 3663, terminals shall be suitable for the size of the intended cables.		N/A
3.3.7	Add the following after the first sentence: This requirement is not applicable to the external earting terminal of Class 0I equipment.		N/A
4.3.4	Add the following after the first sentence: This requirement also applies to those connections in Class 0I equipment, where CLEARANCE or CREEPAGE DISTANCES over BASIC INSULATION would be reduced to less than the values specified in 2.10.		N/A
4.3.13.5	Replace the first paragraph with the following: Except as permitted below, equipment shall be classified and labelled according to JIS C 6802:2005, and JIS C 6803:2006 or IEC 60825-2:2000, as applicable. Replace IEC 60825-1 in the second and the last paragraph with JIS C 6802:2005.		N/A

IEC 60950-1 ATTACHMENT			
Clause	Requirement + Test	Result - Remark	Verdict
4.5	Add the following NOTE to Table 4B, 3): NOTE: In case no data for the material is available, Appendix 4, 4. (1). b. 3 of the Interpretation on the Ministerial Ordinance stipulating Technical Specifications for Electrical Appliances (Commerce and Distribution Policy Group No. 3:2008/06/19) may apply.		N/A
5.1.3	Add a note after the first paragraph as follows: NOTE Attention should be drawn to that majority of three-phase power system in Japan is of delta connection, and therefore, in that case, the test is conducted using the test circuit from IEC 60990, figure 13.		N/A
5.1.6	Replace Table 5A as follows:		N/A

Type of equipment	Terminal A of measuring instrument connected to:	Maximum TOUCH CURRENT mA r.m.s. [1]	Maximum PROTECTIVE CONDUCTOR CURRENT
All equipment	Accessible parts and circuits not connected to protective earth	0,25	-
HAND-HELD	Equipment main protective earthing terminal (if any) CLASS I EQUIPMENT	0,75	-
MOVABLE (other than HAND-HELD, but including TRANSPORTABLE EQUIPMENT		3,5	-
STATIONARY, PLUGGABLE TYPE A		3,5	-
All other STATIONARY EQUIPMENT - not subject to the conditions of 5.1.7 - subject to the conditions of 5.1.7		3,5 -	- 5 % of input current
HAND-HELD	Equipment main protective earthing terminal (if any) CLASS 0I EQUIPMENT	0,5	-
Others		1,0	-

[1] If peak values of TOUCH-CURRENT are measured, the maximum values obtained by multiplying the r.m.s. values by 1,414.

6	Replace IEC 60664-1 in NOTE 4 with JIS C 0664.		N/A
7	Replace IEC 60664-1 in NOTE 3 with JIS C 0664:2003.		N/A

IEC 60950-1 ATTACHMENT			
Clause	Requirement + Test	Result - Remark	Verdict
7.2	Add the following after the paragraph: However, the separation requirements and tests of 6.2.1 a), b) and c) do not apply to a CABLE DISTRIBUTION SYSTEM if all of the following apply: - the circuit under consideration is a TNV-1 CIRCUIT; and – the common or earthed side of the circuit is connected to the screen of the coaxial cable and to all accessible parts and circuits (SELV, accessible metal parts and LIMITED CURRENT CIRCUITS, if any); and – the screen of the coaxial cable is intended to be connected to earth in the building installation.		N/A
W.1	Replace the second and the third sentence in the first paragraph with the following: This distinction between earthed and unearthed (floating) circuit is not the same as between CLASS I EQUIMENT, CLASS 0I EQUIPMENT and CLASS II EQUIPMENT. Floating circuits can exist in CLASS I EQUIPMENT or CLASS 0I EQUIPMENT and earthed circuits in CLASS II EQUIPMENT.		N/A

IEC 60950-1 ATTACHMENT			
Clause	Requirement + Test	Result - Remark	Verdict
Annex JA	Add a new annex JA with the following contents. Annex JA (normative) Document shredding machines Document shredding machines shall also comply with the requirements of this annex except those of STATIONARY EQUIPMENT used by connecting directly to an AC MAINS SUPPLY of three-phase 200V or more. **JA.1 Markings and instructions** The symbol ⚠ (JIS S 0101:2000, 6.2.4) and the following precautions for use shall be marked on readily visible part adjacent to document feed opening. The marking shall be clearly legible, permanent, and easily discernible; - that use by an infants/children may cause a hazard of injury etc.; - that a hand can be drawn into the mechanical section for shredding when touching the document-slot; - that clothing can be drawn into the mechanical section for shredding when touching the document-slot; - that hairs can be drawn into the mechanical section for shredding when touching the document-slot; - in case of equipment incorporating a commutator motor, that equipment may catch fire or explode by spraying of flammable gas. **JA.2 Inadvertent reactivation** Any safety interlock that can be operated by means of the test finger, Figure JA.1, is considered to be likely to cause inadvertent reactivation of the hazard. Compliance is checked by inspection and, where necessary, by a test with the test finger, Figure JA.1 **JA.3 Disconnection from the mains supply** Document shredding machines shall incorporate an isolating switch complying with sub-clause 3.4.2 as the device disconnecting the power of hazardous moving parts. For this switch, two-position (single-use) switch or multi-position (multifunction) switch (e.g., slide switch) may be used.	Not such equipment.	N/A

IEC 60950-1 ATTACHMENT			
Clause	Requirement + Test	Result - Remark	Verdict
Annex JA	If two-position switch, the positions for "ON" and "OFF" shall be indicated in accordance with sub-clause 1.7.8. If multi-position switch, the position for "OFF" shall be indicated in accordance with sub-clause 1.7.8 and other positions shall be indicated with proper terms or symbols. Compliance is checked by inspection **JA.4 Protection against hazardous moving parts** Any warning shall not be used instead of the structure for preventing access to hazardous moving parts. Document shredding machines shall comply with the following requirements. Insert the test finger, Figure JA.1, into all openings in MECHANICAL ENCLOSURES without applying appreciable force. It shall not be possible to touch hazardous moving parts with the test finger. This consideration applies to all sides of MECHANICAL ENCLOSURES when the equipment is mounted as intended. Before testing with the test finger, remove the parts detachable without a tool. Insert the wedge-probe, Figure JA.2, into the document-slot. And, against all directions of openings, if straight-cutting type, a force of 45 N shall apply to the probe, and 90 N if cross-cutting type. In this case, the weight of the probe is to be factored into the overall applied force. Before testing with the wedge-probe, remove the parts detachable without a tool. It shall not be possible to touch any hazardous moving parts, including the shredding roller or the mechanical section for shedding, with the probe.		N/A

IEC 60950-1 ATTACHMENT			
Clause	Requirement + Test	Result - Remark	Verdict
Annex JA	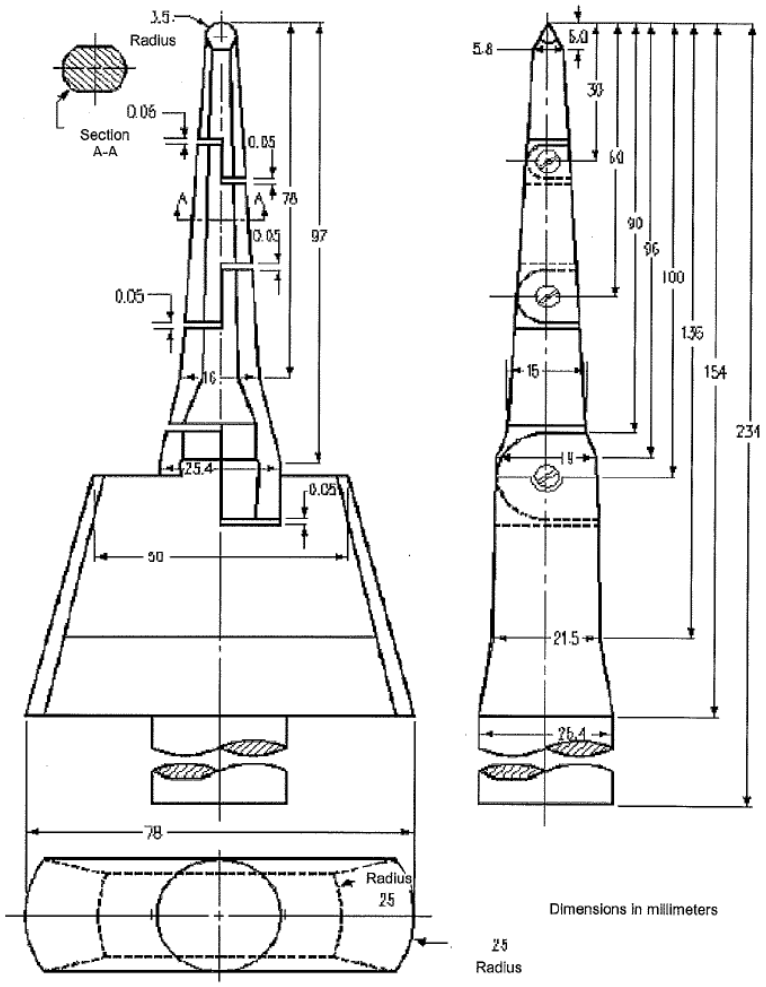 Figure JA.1 Test finger		N/A

IEC 60950-1 ATTACHMENT			
Clause	Requirement + Test	Result - Remark	Verdict

Annex JA — N/A

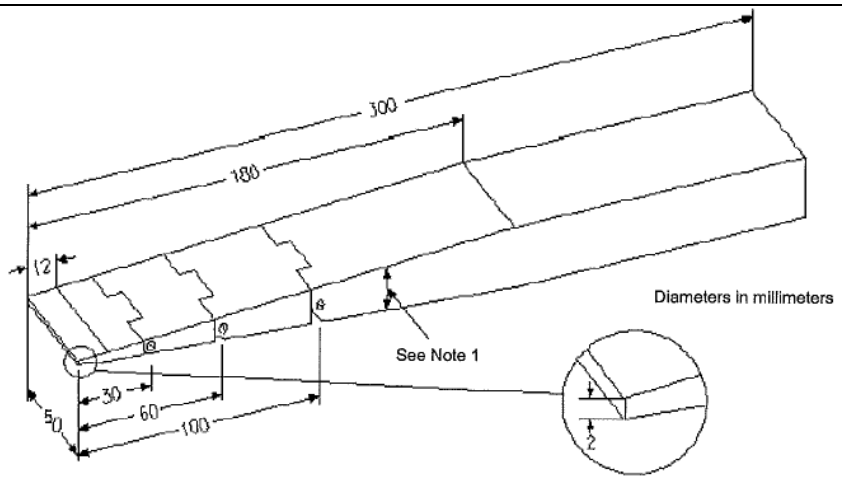

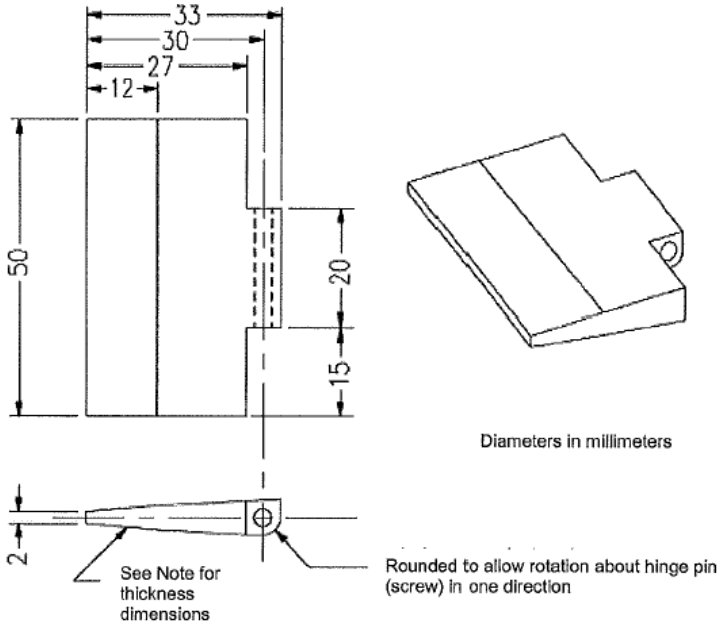

Details of the tip of wedge

Distance from the tip (mm)	Thickness of probe (mm)
0	2
12	4
180	24

NOTE 1 The thickness of the probe varies linearly, with slope changes at the respective points shown in the table.
NOTE2 The allowable dimensional tolerance of the probe is +/- 0.127 mm.

Figure JA.2 Wedge-probe

ATTACHMENT TO TEST REPORT IEC 60950-1
KOREAN DIFFERENCES

Differences according to .....:	K 60950-1
IEC Standard.....:	60950-1(ed.2);am1
Last Modification .....:	Date (2012-05-31)

Clause	Requirement + Test	Result - Remark	Verdict
1.5.101	Plugs for the connection of the apparatus to the supply mains shall comply with the Korean requirement (KSC 8305).	Class III equipment.	N/A
8	EMC The apparatus shall comply with the relevant CISPR standards	Compliance with EMC must be considered when marketed in Korea.	—

IEC60950-1 ATTACHMENT			
Clause	Requirement + Test	Result - Remark	Verdict

ATTACHMENT TO TEST REPORT IEC 60950-1
Singapore DIFFERENCES

Differences according to .....:	Singapore: Consumer Protection Information Booklet, 2012 Edition, (Ver. 4.3).
IEC Standard.....:	60950-1(ed.1)
Last Modification .....:	Date (2012-11-29)

No	Item	Requirement + Test	Result - Remark	Verdict
The following is the national differences in accordance with safety authority website www.spring.gov.sg, ref. Singapore Consumer Protection (Safety Requirements) - Information booklet - chapter 7 (page 21 - 24). Based on information by Singapore NCB – PSB Corp.				
7 SAFETY AUTHORITY'S REQUIREMENTS The Safety Authority monitors the safety of the controlled goods sold in Singapore by investigating all complaints, incidents and accidents reported to the authority. Experiences gained are translated into the Safety Authority's Requirements. These requirements are to be fulfilled in addition to the applicable safety standards.				
Applicable to all products				
1	Test certificate / Test report	Test certificate / Test report more than three (3) years old shall be rejected.	Compliance must be considered when equipment marketed Singapore.	—
2	Controlled Goods incorporated with additional function	The additional function must be tested to its applicable safety standard.		P
Applicable to all electrical products				
3	All appliances	All appliances must be tested to 230 VAC.	Class III equipment.	N/A
4	Voltage selector (voltage mis-match test)	Appliance fitted with voltage selector shall be tested as follows: Connect appliance to 230 VAC mains with voltage selector switch to settings not suitable for operation at 230 VAC.	No voltage selector.	N/A
5	Tropical condition test	All appliances (with tropical test requirements in applicable Standards) shall comply with the tropical condition test as stated in the relevant IEC Standards.	Complied with requirement, refer to main test report.	P
6	Class I appliances (3-pin mains plug)	All Class I appliances must be fitted with 3-pin mains plugs complied with SS 145/SS 472 that are registered with the Safety Authority.	Class III equipment.	N/A

IEC60950-1 ATTACHMENT			
Clause	Requirement + Test	Result - Remark	Verdict
7	Class II appliances (mains plug)	a) All Class II appliances must be fitted with 2-pin mains plug (Appendix W) complied with IEC 83: 1975 (Standard C5, Version II) or EN 50075: 1991. b) Class II appliances that are fitted with 3-pin mains plugs must use plugs that are complied with SS 145 and registered with the Safety Authority.	Class III equipment.	N/A
8	Appliances rated ≥ 3 kW or connected to fixed wiring	Electric appliance ≥ 3 kW must be connected to fixed wiring. All connection to fixed wiring must be in accordance with Code of Practice CP5.	The rated power is less than 3kW.	N/A
9	Detachable power cord set (consists of mains plug, mains cord and appliance connector	Detachable power cord set must be listed in the test report critical component list.	Class III equipment.	N/A
10	Circuit diagrams	Circuit diagrams must be indicated with component's values for products tested to IEC 60065 and IEC 60950.	Must be evaluated when market to Singapore	—
11	Circuit diagrams of electronic modules in electrical appliances	Circuit diagrams of the electronic modules in the electrical appliances must be provided.	Must be evaluated when market to Singapore	—
12	Controlled goods likely to be treated as toy by children	Controlled goods, having an enclosure, which is shaped and decorated so that it is likely to be treated as a toy by children, shall not be accepted for certification and registration.	The equipment is not treated as toy by children.	N/A
Applicable to AC adaptor				
14	3-pin AC adaptor (Appendix V)	Test report showing that the 3-pin complied with sub-clauses 12.1 & 12.3 of SS 246 must be submitted.	Class III equipment.	N/A
15	2-pin AC adaptor (Appendix V)	The 2-pin (Appendix T) shall comply with EN 50075		N/A
16	Detachable power supply cord set not supplied by Registered Supplier	Registered Supplier who is not supplying the detachable power supply cord set together with the AC Adaptor must provide written instruction to its customer on the type of approved detachable power cord set to use.	Class III equipment.	N/A
Applicable to computer products				

IEC60950-1 ATTACHMENT			
Clause	Requirement + Test	Result - Remark	Verdict
17	CD/DVD ROM (used in personal computer)	Test certificate showing that CD/DVD ROM has complied with IEC 825 must be provided.	The equipment does not consist of CD/DVD ROM.	N/A
18	Modem Card (used in personal computer)	Modem card incorporated in the personal computer must be tested at set level (sub-clauses 5.1 & 6 of IEC 60950) or at component level.	The equipment does not consist of Modem Card.	N/A
Applicable to plasma/LCD display monitor			
38	Plasma/LCD display monitor with TV tuner	Plasma/LCD display monitor tested to IEC 60950 would require additional test to clauses 9 (related to antenna only), 10.1, 10.2, 10.3 and 12.5 of IEC 60065.	No such equipment.	N/A

IEC60950_1C ATTACHMENT			
Clause	Requirement + Test	Result - Remark	Verdict

ATTACHMENT TO TEST REPORT IEC 60950-1
U.S.A. NATIONAL DIFFERENCES
Information technology equipment – Safety –

Part 1: General requirements

Differences according to.....:	UL 60950-1-07
Attachment Form No. .....:	US_ND_IEC60950_1C
Attachment Originator.....:	TÜV SÜD Product Service GmbH
Master Attachment.....:	Date (2012-08)

Copyright © 2012 IEC System for Conformity Testing and Certification of Electrical Equipment (IECEE), Geneva, Switzerland. All rights reserved.

	Special national conditions		
1.1.1	All equipment is to be designed to allow installation in accordance with the National Electrical Code (NEC), ANSI/NFPA 70, the Canadian Electrical Code (CEC), Part I, CAN/CSA C22.1, and when applicable, the National Electrical Safety Code, IEEE C2.	Class III equipment.	N/A
	Also, unless marked or otherwise identified, installation is allowed per the Standard for the Protection of Electronic Computer/Data-Processing Equipment, ANSI/NFPA 75.		N/A
1.4.14	For Pluggable Equipment Type A, the protection in the installation is assumed to be 20A.	Class III equipment.	N/A
1.5.5	For lengths exceeding 3.05 m, external interconnecting flexible cord and cable assemblies are required to be a suitable cable type (e.g., DP, CL2) specified in the CEC/NEC.	No interconnecting cable provided.	N/A
	For lengths 3.05 m or less, external interconnecting flexible cord and cable assemblies that are not types specified in the CEC are required to have special construction features and identification markings.		N/A
1.7.1	Equipment for use on a.c. mains supply systems with a neutral and more than one phase conductor (e.g. 120/240 V, 3-wire) require a special marking format for electrical ratings.		N/A
	A voltage rating that exceeds an attachment plug cap rating is only permitted if it does not exceed the extreme operating conditions in Table 2 of CAN/CSA C22.2 No. 235, and		N/A
	- if it is part of a range that extends into the Table 2 "Normal Operating Conditions."		N/A

IEC60950_1C ATTACHMENT			
Clause	Requirement + Test	Result - Remark	Verdict
	A voltage rating is not to be lower than the specified "Normal Operating Conditions," unless it is part of a range that extends into the "Normal Operating Conditions."		N/A
1.7.7	Wiring terminals intended to supply Class 2 outputs in accordance with CEC Part 1 or NEC are marked with the voltage rating and “Class 2” or equivalent.	No such terminal	N/A
	- Marking is located adjacent to the terminals		N/A
	- Marking is visible during wiring		N/A
2.5	Fuse providing Class 2, Limited Power Source, or TNV current limiting is not operator-accessible unless it is not interchangeable.		N/A
2.6.3.3	Modify first column on Table 2D to “Smaller of the RATED CURRENT of the equipment or the PROTECTIVE CURRENT RATING of the circuit under consideration.”		N/A
2.7.1	Suitable NEC/CEC branch circuit protection rated at the maximum circuit rating is provided for all standard supply outlets and receptacles (such as supplied in power distribution units) if the supply branch circuit protection is not suitable.	No standard supply outlets, receptacles, lampholders or such transformers.	N/A
	Power distribution transformers distributing power at 100 volts or more, and rated 10 kVA or more, provided with special transformer overcurrent protection.		N/A
3.2	Wiring methods (terminals, leads, etc.) used for the connection of the equipment to the mains is in accordance with the NEC/CEC.	Class III equipment.	N/A
3.2.1	Attachment plugs of power supply cords are rated not less than 125 per cent of the rated current of the equipment.		N/A
3.2.1.2	Equipment connected to a centralized d.c. power system, and having one pole of the DC mains input terminal connected to the main protective earthing terminal in the equipment comply with special earthing, wiring, marking and installation instruction requirements.		N/A
3.2.3	Permanent connection of equipment to the mains supply by a power supply cord is not permitted, except for certain equipment, such as ATMs.		N/A
3.2.5	Power supply cords are no longer than 4.5 m in length.		N/A

IEC60950_1C ATTACHMENT			
Clause	Requirement + Test	Result - Remark	Verdict
	Minimum cord length is 1.5 m, with certain constructions such as external power supplies allowed to consider both input and output cord lengths into the requirement.		N/A
	Flexible power supply cords are compatible with Article 400 of the NEC, and Tables 11 and 12 of the CEC.		N/A
3.2.9	Permanently connected equipment have a suitable wiring compartment and wire bending space.		N/A
3.3	Wiring terminals and associated spacings for field wiring connections comply with CSA C22.2 No. 0.		N/A
3.3.3	Wire binding screws are not permitted to attach conductors larger than 10 AWG (5.3 mm2).		N/A
3.3.4	Terminals for permanent wiring, including protective earthing terminals, are suitable for Canadian/US wire gauge sizes, are		N/A
	- rated 125 per cent of the equipment rating, and		N/A
	- are specially marked when specified (1.7.7).		N/A
3.3.5	Revise first column of Table 3E to “Smaller of the RATED CURRENT of the equipment or the PROTECTIVE CURRENT RATING of the circuit under consideration.”		N/A
3.4.2	Motor control devices are provided for cord-connected equipment with a motor if the equipment is rated more than 12 A,		N/A
	- or if the motor has a nominal voltage rating greater than 120 V		N/A
	- or is rated more than 1/3 hp (locked rotor current over 43 A)		N/A
3.4.8	Vertically-mounted disconnect switches and circuit breakers have the "on" position indicated by the handle in the up position.		N/A
3.4.11	For computer room applications, equipment with battery systems capable of supplying 750 VA for five minutes have a battery disconnect means that may be connected to the computer room remote power-off circuit.		N/A
4.3.12	The maximum quantity of flammable liquid stored in equipment complies with NFPA 30.	The equipment does not contain flammable liquid.	N/A
4.3.13.5	Equipment with lasers meet the Canadian Radiation Emitting Devices Act, REDR C1370 and/or Code of Federal Regulations 21 CFR 1040, as applicable.	No laser.	N/A

IEC60950_1C ATTACHMENT			
Clause	Requirement + Test	Result - Remark	Verdict
4.7	For computer room applications, automated information storage systems with combustible media greater than 0.76 m3 (27 cu ft) have a provision for connection of either automatic sprinklers or a gaseous agent extinguishing system with an extended discharge.	The equipment has no combustible area greater than 27 cubic feet.	N/A
4.7.3.1	For computer room applications, enclosures with combustible material measuring greater than 0.9 m2 (10 sq ft) or a single dimension greater than 1.8 m (6 ft) have a flame spread rating of 50 or less.	The equipment has no combustible material greater than 0.9m² or single dimension greater than 1.8m.	N/A
	For other applications, enclosures with the same dimensions require a flame spread rating of 200 or less.		N/A
Annex H	Equipment that produces ionizing radiation complies with U.S. Code of Federal Regulations, 21 CFR 1020 (and the Canadian Radiation Emitting Devices Act, REDR C1370).	The equipment does not produce ionizing radiation.	N/A
	Other National Differences		
1.5.1	Some components and materials associated with the risk of fire, electric shock, or personal injury have component or material ratings in accordance with the applicable national (Canadian and/or U.S.) component or material standard requirements.		P
1.6.1.2	A circuit for connection to the DC Mains Supply is classified as either a SELV Circuit, TNV-2 Circuit or Hazardous Voltage Circuit depending on the maximum operating voltage of the supply.	Not for connection to DC mains supply.	N/A
	This maximum operating voltage includes consideration of the battery charging “float voltage” associated with the intended supply system, regardless of the marked power rating of the equipment.		N/A
2.3.1	For TNV-2 and TNV-3 circuits with other than ringing signals and with voltages exceeding 42.4 Vpeak or 60 Vd.c., the maximum acceptable current through a 2000 ohm resistor (or greater) connected across the voltage source with other loads disconnected is 7.1 mA peak or 30 mA d.c. under normal operating conditions.	No TNV circuitry.	N/A
2.3.2.1	In the event of a single fault between TNV and SELV circuits, the limits of 2.2.3 apply to SELV Circuits and accessible conductive parts.	No TNV circuitry.	N/A
2.6.3.4	Protective bonding conductors of non-standard protective bonding constructions (e.g., printed circuit traces) may be subjected to the additional limited short circuit test conditions specified.	Class III equipment.	N/A

IEC60950_1C ATTACHMENT			
Clause	Requirement + Test	Result - Remark	Verdict
4.2.8.1	Enclosures around CRTs with a face diameter of 160 mm or more reduce the risk of injury due to the implosion of the CRT.		N/A
4.3.2	Equipment with handles complies with special loading tests.		N/A
5.1.8.3	Equipment intended to receive telecommunication ringing signals comply with a special touch current measurement tests.	No TNV circuitry.	N/A
5.3.7	Internal (e.g., card cage) SELV circuit connectors and printed wiring board connectors that are accessible to the operator and that deliver power are overloaded.	No such connector.	N/A
	During abnormal operating testing, if a circuit is interrupted by the opening of a component, the test shall be repeated twice (three tests total) using new components as necessary		N/A
6.4	Equipment intended for connection to telecommunication network outside plant cable is protected against overvoltage from power line crosses in accordance with 6.4 and Annex NAC.	No TNV circuitry.	N/A
Annex EE	Articulated accessibility probe (Fig EE.3) is used for assessing accessibility to document/media shredders instead of the Figure 2A test finger.	Not such equipment.	N/A
Annex M.2	Continuous ringing signals up to 16 mA only are permitted if the equipment is subjected to special installation and performance restrictions.	Not such equipment.	N/A
Annex NAD	Equipment connected to a telecommunication and cable distribution networks and supplied with an earphone intended to be held against, or in the ear comply with special acoustic pressure requirements.	Not such equipment.	N/A