Test Report issued under the responsibility of:

TEST REPORT
IEC 62368-1
Audio/video, information and communication technology equipment
Part 1: Safety requirements

Report Number.....:	**T223-0042/20**
Date of issue.....:	2020-04-10
Total number of pages.....:	177 pages
Applicant's name.....:	**GlobTek, Inc.**
Address.....:	186 Veterans Drive, Northvale NJ 07647, New Jersey, USA
Test specification:	
Standard .....:	IEC 62368-1:2014 (Second Edition)
Test procedure.....:	CB Scheme
Non-standard test method .....:	N/A
Test Report Form No. ..... :	IEC62368_1B
Test Report Form(s) Originator .....:	UL(US)
Master TRF.....:	2014-03

This report is not valid as a CB Test Report unless signed by an approved CB Testing Laboratory and appended to a CB Test Certificate issued by an NCB in accordance with IECEE 02.

General disclaimer:

The test results presented in this report relate only to the object tested.
This report shall not be reproduced, except in full, without the written approval of the Issuing CB Testing Laboratory. The authenticity of this Test Report and its contents can be verified by contacting the NCB, responsible for this Test Report.

Test Item description .....:		ICT/ITE Power Supply	
Trade Mark .....:		GlobTek, Inc.	
Manufacturer.....:		GlobTek, Inc. 186 Veterans Drive, Northvale NJ 07647, New Jersey, USA	
Model/Type reference .....:		GT-46200-WWVV-X.XX-TZ****** (see page 7 for details)	
Ratings .....:		Input: 100-240 V~; 50-60 Hz; 0,5 A Output: 5-5,95 Vdc; max. 4 A; max. 20 W (see page 7 for details)	
Testing procedure and testing location:			
☒	CB Testing Laboratory:	SIQ Ljubljana *SIQ Ljubljana is accredited by Slovenian Accreditation with accreditation number LP-009 in the field of testing.*	
Testing location/ address .....:		Mašera-Spasićeva ulica 10, SI-1000 Ljubljana Slovenia	
☐	Associated CB Testing Laboratory:		
Testing location/ address.....:			
	Tested by (name + signature) .....:	Rok Štampohar	
	Approved by (name + signature).....:	Boštjan Glavič	
☐	Testing procedure: TMP/CTF Stage 1		
Testing location/ address..... :			
	Tested by (name + signature) .....:		
	Approved by (name + signature).....:		
☐	Testing procedure: WMT/CTF Stage 2		
Testing location/ address.....:			
	Tested by (name + signature) .....:		
	Witnessed by (name + signature) .....:		
	Approved by (name + signature).....:		
☐	Testing procedure: SMT/CTF Stage 3 or 4		
Testing location/ address.....:			
	Tested by (name + signature) .....:		
	Approved by (name + signature).....:		
	Supervised by (name + signature) .....:		

List of Attachments (including a total number of pages in each attachment):

1. National differences according to IEC 62368-1:2014 (Second Edition) – Enclosure No. 1 (54 pages)
2. Pictures of the unit – Enclosure No. 2 (9 pages)
3. Technical documentation – schematics, layouts, transformer data – Enclosure No. 3 (31 pages)

Summary of testing:

Tests performed (name of test and test clause):	**Testing location:**
5.2 Electrical energy source measurement 5.4.1.4 Measurement of maximum operating temperatures for materials, components and systems 5.4.1.8 Determination of working voltage 5.4.2 / 5.4.3 Clearance and creepage distances 5.4.4.2 Minimum distance through insulation 5.4.4.6.2 Separable thin sheet material 5.4.8 Humidity conditioning 5.4.9 Electric strength test 5.5.2.2 Capacitor discharge test 5.6.6 Resistance of the protective bonding system (applicable for Class I model only) 5.7 Prospective touch voltage, touch current and protective conductor current 6.2.2.2 Power measurement for worst-case fault 6.2.2.3 Power measurement for worst-case power source fault 9.2.5 Temperature test B.2.5 Input test B.3.1 – B.3.8 Simulated abnormal operating conditions: - Maximum load at output terminals B.4.1 – B.4.9 Simulated single fault conditions: - Short circuit of clearances for functional insulation - Short circuit of creepage distances for functional insulation - Short circuit and interruption of electrodes in tubes and semiconductors - Short circuit or disconnection of passive devices - Continuous operation of components F.3.10 Permanence of markings G.5.3.3 Transformer overload test Annex Q.1 Limited Power Source T.2 Steady force test, 10 N T.4 Steady force test, 100 N T.5 Steady force test, 250 N	**SIQ Ljubljana** **Mašera-Spasićeva ulica 10,** **SI-1000 Ljubljana, Slovenia**

T.6	Enclosure impact test	
T.7	Drop test	
T.8	Stress relief test	

Summary of compliance with National Differences:

List of countries addressed

Australia, Austria*, Canada, Denmark*, Finland*, Ireland*, Germany*, Italy*, Japan, Norway*, Slovenia*, Spain*, Sweden*, Switzerland*, United Kingdom*, USA, CENELEC common modifications as listed in online CB-Bulletin.

* European Group Differences and National Differences

See enclosure No. 1 for details.

☒ **The product fulfils the requirements of EN 62368-1:2014 + A11:2017**

Copy of marking plate:

The artwork below may be only a draft. The use of certification marks on a product must be authorized by the respective NCBs that own these marks.

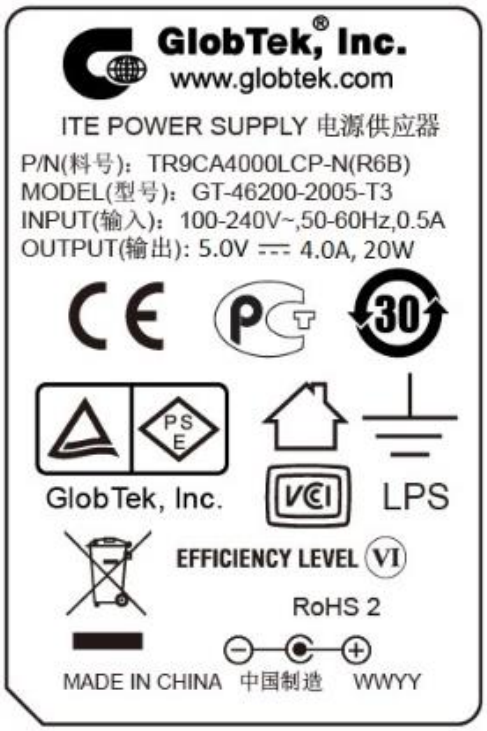

TEST ITEM PARTICULARS:	
Classification of use by.....:	☒ Ordinary person ☐ Instructed person ☐ Skilled person ☒ Children likely to be present
Supply Connection.....:	☒ AC Mains ☐ DC Mains ☐ External Circuit - not Mains connected - ☐ ES1 ☐ ES2 ☐ ES3
Supply % Tolerance .....:	☒ +10%/-10% ☐ +20%/-15% ☐ +____%/ -_____% ☐ None
Supply Connection – Type .....:	☒ pluggable equipment type A - ☐ non-detachable supply cord ☒ appliance coupler ☐ direct plug-in ☐ mating connector ☐ pluggable equipment type B - ☐ non-detachable supply cord ☐ appliance coupler ☐ permanent connection ☐ mating connector ☐ other:_____
Considered current rating of protective device as part of building or equipment installation ..... :	16 A (13 A for UK and 20 A for US/CAN) Installation location: ☒ building; ☐ equipment
Equipment mobility ..... :	☒ movable ☐ hand-held ☐ transportable ☐ stationary ☐ for building-in ☐ direct plug-in ☐ rack-mounting ☐ wall-mounted
Over voltage category (OVC) ..... :	☐ OVC I ☒ OVC II ☐ OVC III ☐ OVC IV ☐ other: _____
Class of equipment ..... :	☒ Class I ☒ Class II ☐ Class III
Access location ..... :	☐ restricted access location ☒ N/A
Pollution degree (PD) ..... :	☐ PD 1 ☒ PD 2 ☐ PD 3
Manufacturer's specified maxium operating ambient :	40°C
IP protection class ..... :	☒ IPX0 ☐ IP___
Power Systems ..... :	☒ TN ☐ TT ☐ IT - ____ V L-L
Altitude during operation (m) ..... :	☒ 2000 m or less ☐ _____ m
Altitude of test laboratory (m) ..... :	☐ 2000 m or less ☒ 300 m
Mass of equipment (kg) ..... :	☒ approx. 0,170 kg
POSSIBLE TEST CASE VERDICTS:	
- test case does not apply to the test object ..... :	N/A
- test object does meet the requirement ..... :	P (Pass)
- test object does not meet the requirement ..... :	F (Fail)

TESTING:	
Date of receipt of test item .....:	2020-01-14
Date (s) of performance of tests .....:	From 2020-01-23 to 2020-01-31

GENERAL REMARKS:

"(See Enclosure #)" refers to additional information appended to the report.
"(See appended table)" refers to a table appended to the report.

Throughout this report a ☒ comma / ☐ point is used as the decimal separator.

Manufacturer's Declaration per sub-clause 4.2.5 of IECEE 02:

The application for obtaining a CB Test Certificate includes more than one factory location and a declaration from the Manufacturer stating that the sample(s) submitted for evaluation is (are) representative of the products from each factory has been provided.....:	☒ **Yes** ☐ **Not applicable**

When differences exist; they shall be identified in the General product information section.

Name and address of factory (ies) .....:	1) GlobTek, Inc. 186 Veterans Dr. Northvale, NJ 07647, New Jersey USA 2) GlobTek (Suzhou) Co. Ltd. Building 4, No. 76 JinLing East Road,Suzhou Industrial Park, Suzhou JiangSu, 215021, China

GENERAL PRODUCT INFORMATION:

Product Description – Switch mode Power Supply

The product is family of switch mode power supplies rated Class I or Class II (depends on model). The product intended to be used for information technology equipment or audio/video equipment. Enclosure consists of two parts which are fixed together by ultrasonic welding process (cannot be open without the use of a tool). Output cable is non-detachable with low-voltage-plug. There are no openings in enclosure. Units are designed for a max. ambient temperature of 40ºC.

GT-46200 series model list:
GT-46200-WWVV-X.XX-TZ******
WW is the standard output wattage, with a maximum value of "20",
VV is the standard rated output voltage designation, with a value of "05" and "06";
-X.XX denote the output voltage differentiator, subtracting X.XX volts from standard output voltage VV in 0.01V increments, the actual output voltage rang is 5 – 5,95 V, blank is to indicate the no voltage different.
Z can be 2 or 3 or 3 A, 2 means Class II with C8 inlet type, 3 means Class I with C14 inlet type, 3A means Class I with C6 inlet type
Each * = 0-9 or A-Z or ()[] or blank for marketing purposes.

Model name	Output voltage (Vdc)	Output current (A)	Max. power (VA)
GT-46200-WW05-TZ******	5	4.0	20
GT-46200-WW06-X.XX-TZ******	5.01 - 5.95	3.59	18

Model Differences – See above for differences. Major differences are Class I or Class II types. The difference is also in type designation, output rating and type of appliance inlet (C8 for Class II and C14 or C6 for Class I).

Additional application considerations – (Considerations used to test a component or sub-assembly) –

The product was tested according to the standard IEC 62368-1:2014 (2nd Edition) and/or EN 62368-1:2014 + A11:2017.

Additionally, the product was also evaluated according to the standards CSA C22.2 No. 62368-1:2014 and UL 62368-1:2014 (2nd Edition) and fulfils the requirements of these standards.

1. The product was tested to be suitable for connection to 16 A (13 A for UK and 20 A for US/CAN).

2. All secondary output circuits are separated from mains by reinforced insulation and rated ES1 and PS2.

3. Appliance inlet on the unit can be used as a disconnect device.

4. The power supply is rated Class I or Class II.

5. The transformer T1 provides reinforced insulation. This transformer is built up to fulfil the requirement of insulation class B.

6. The equipment has been evaluated for use in a Pollution Degree 2 and overvoltage category II environment and a maximum altitude of 2000 m.

7. The product was evaluated for a maximum ambient of 40°C

This report has been judged on basis of two CB test reports:

1. CB test report No. 19SBCS05039 0841, issued 2019-11-11, by DongGuan ShuoXin Electronic Technology Co., Ltd. Zone A, 1F, No. 6, XinGang Road YuanGang Street, XinAn District, ChangAn Town, DongGuan City, GuangDong, China.

2. CB test report No. 19SBCS05036 0831, issued 2019-11-05, by DongGuan ShuoXin Electronic Technology Co., Ltd. Zone A, 1F, No. 6, XinGang Road YuanGang Street, XinAn District, ChangAn Town, DongGuan City, GuangDong, China.

After review following tests were repeated:

- Construction check
- 5.2 Classification of electrical energy source
- 5.4.9 Electric strength test
- 5.6.6.2 Resistance of protective conductors and terminations
- 5.7 Prospective touch voltage, touch current and protective conductor current
- B.2.5 Input test
- F.3.10 Test for performance of marking

Based on those results the test results from test report No. 19SBCS05039 0841 and test report No. 19SBCS05036 0831 was considered acceptable and the test results were adopted to this test report.

Additional information for the follow up engineer:
/

ENERGY SOURCE IDENTIFICATION AND CLASSIFICATION TABLE:	
(Note 1: Identify the following six (6) energy source forms based on the origin of the energy.) (Note 2: The identified classification e.g., ES2, TS1, should be with respect to its ability to cause pain or injury on the body or its ability to ignite a combustible material. Any energy source can be declared Class 3 as a worse case classification e.g. PS3, ES3.	
Electrically-caused injury (Clause 5): (Note: Identify type of source, list sub-assembly or circuit designation and corresponding energy source classification) Example: +5 V dc input ES1	
Source of electrical energy	**Corresponding classification (ES)**
All circuit except output circuit	ES3 (steady-state voltage and current)
X capacitor connected between L to N	ES3 (stored capacitance)
Secondary output connector	ES1 (steady-state voltage and current)
Electrically-caused fire (Clause 6): (Note: List sub-assembly or circuit designation and corresponding energy source classification) Example: Battery pack (maximum 85 watts): PS2	
Source of power or PIS	**Corresponding classification (PS)**
Internal circuit of the unit	PS3, Arching PIS, Resistive PIS
Secondary output connector	PS2
Injury caused by hazardous substances (Clause 7) (Note: Specify hazardous chemicals, whether produces ozone or other chemical construction not addressed as part of the component evaluation.) Example: Liquid in filled component Glycol	
Source of hazardous substances	**Corresponding chemical**
N/A	N/A
Mechanically-caused injury (Clause 8) (Note: List moving part(s), fan, special installations, etc. & corresponding MS classification based on Table 35.) Example: Wall mount unit MS2	
Source of kinetic/mechanical energy	**Corresponding classification (MS)**
Sharp edges and corners	MS1
Equipment mass	MS1
Thermal burn injury (Clause 9) (Note: Identify the surface or support, and corresponding energy source classification based on type of part, location, operating temperature and contact time in Table 38.) Example: Hand-held scanner – thermoplastic enclosure TS1	
Source of thermal energy	**Corresponding classification (TS)**
Internal parts/circuits	TS3
Accessible surfaces	TS1
Radiation (Clause 10) (Note: List the types of radiation present in the product and the corresponding energy source classification.) Example: DVD – Class 1 Laser Product RS1	
Type of radiation	**Corresponding classification (RS)**
N/A	N/A

ENERGY SOURCE DIAGRAM
Indicate which energy sources are included in the energy source diagram. Insert diagram below
☒ **ES** ☒ **PS** ☒ **MS** ☒ **TS** ☐ **RS** **Description of the circuits and acceible parts:** AC input: ES3 (steady state), PS3 Primary circuit: ES3, PS3 Output of the unit: ES1, PS2 Complete enclosure: TS1 Mass, edges/corners: MS1

OVERVIEW OF EMPLOYED SAFEGUARDS				
Clause	**Possible Hazard**			
5.1	Electrically-caused injury			
Body Part (e.g. Ordinary)	Energy Source (ES3: Primary Filter circuit)	Safeguards		
		Basic	Supplementary	Reinforced (Enclosure)
Ordinary/Child	ES3: All circuit except output circuits	N/A	N/A	Equipment Enclosure
Ordinary/Child	ES3: pins of appliance inlet	N/A	N/A	Bleeder resistors (5.5.2.2)
Ordinary/Child	ES1: all output connectors	N/A	N/A	N/A
6.1	Electrically-caused fire			
Material part (e.g. mouse enclosure)	Energy Source (PS2: 100 Watt circuit)	Safeguards		
		Basic	Supplementary	Reinforced
All combustible materials within equipment fire enclosure	PS3: All primary and secondary circuits inside the equipment enclosure	No excessive temperatu re under normal and abnormal operation	No fire after single fault condition + fire enclosure	N/A
Reduction of the likelihood of the entry of foreign objects	PS3	N/A	Equipment safeguard (no openings)	N/A
Connections of secondary equipment	PS2 (LPS)	N/A	N/A	N/A
7.1	Injury caused by hazardous substances			
Body Part (e.g., skilled)	Energy Source (hazardous material)	Safeguards		
		Basic	Supplementary	Reinforced
N/A	N/A	N/A	N/A	N/A
8.1	Mechanically-caused injury			
Body Part (e.g. Ordinary)	Energy Source (MS3:High Pressure Lamp)	Safeguards		
		Basic	Supplementary	Reinforced (Enclosure)
Ordinary/Child	MS1: sharp edges and corners	N/A	N/A	N/A
Ordinary/Child	MS1: equipment mass	N/A	N/A	N/A
9.1	Thermal Burn			
Body Part (e.g., Ordinary)	Energy Source (TS2)	Safeguards		
		Basic	Supplementary	Reinforced
Ordinary/Child	TS1: accessible parts	N/A	N/A	N/A
10.1	Radiation			

Body Part (e.g., Ordinary)	Energy Source (Output from audio port)	Safeguards		
		Basic	Supplementary	Reinforced
N/A	N/A	N/A	N/A	N/A
Supplementary Information: (1) See attached energy source diagram for additional details. (2) “N” – Normal Condition; “A” – Abnormal Condition; “S” Single Fault				

IEC 62368-1			
Clause	Requirement + Test	Result - Remark	Verdict
4	**GENERAL REQUIREMENTS**		P
4.1.1	Acceptance of materials, components and subassemblies		P
4.1.2	Use of components	Certified components are used in accordance with their ratings, certifications and they comply with applicable parts of this standard. Components not certified are used in accordance with their ratings and they comply with applicable parts of IEC 62368-1 and the relevant component standard. Components, for which no relevant IEC-standard exists, or used in circuits not in accordance with their specified ratings, have been tested under the conditions occurring in the equipment, using applicable parts of IEC 62368-1. (See appended table 4.1.2)	P
4.1.3	Equipment design and construction	Equipment is designed in such a manner that under normal operating condition, abnormal operating condition and single fault condition does not cause any injury or in case of fire, property damage.	P
4.1.15	Markings and instructions ..... :	(See Annex F)	P
4.4.4	Safeguard robustness		P
4.4.4.2	Steady force tests..... :	(See Annex T.4, T.5)	P
4.4.4.3	Drop tests ..... :	(See Annex T.7)	P
4.4.4.4	Impact tests ..... :	(See Annex T.6)	P
4.4.4.5	Internal accessible safeguard enclosure and barrier tests ..... :	(See Annex T.9, Annex U)	N/A
4.4.4.6	Glass Impact tests..... :	No safeguard made of glass.	N/A
4.4.4.7	Thermoplastic material tests ..... :	(See Annex T.8)	P
4.4.4.8	Air comprising a safeguard ..... :	(See Annex T)	P
4.4.4.9	Accessibility and safeguard effectiveness	No risk of explosion.	N/A
4.5	Explosion	No risk of explosion.	N/A
4.6	Fixing of conductors		P
4.6.1	Fix conductors not to defeat a safeguard		P
4.6.2	10 N force test applied to ..... :	10 N test was applied to internal components including conductors.	P

IEC 62368-1			
Clause	Requirement + Test	Result - Remark	Verdict
4.7	Equipment for direct insertion into mains socket – outlets	The EUT is not direct plug-in equipment.	N/A
4.7.2	Mains plug part complies with the relevant standard .....:		N/A
4.7.3	Torque (Nm).....:		N/A
4.8	Products containing coin/button cell batteries	No such component inside the unit.	N/A
4.8.2	Instructional safeguard		N/A
4.8.3	Battery Compartment Construction		N/A
	Means to reduce the possibility of children removing the battery .....:		—
4.8.4	Battery Compartment Mechanical Tests .....:	(See Table 4.8.4)	N/A
4.8.5	Battery Accessibility		N/A
4.9	Likelihood of fire or shock due to entry of conductive object .....:	(See Annex P) No openings	P

IEC 62368-1			
Clause	Requirement + Test	Result - Remark	Verdict
5	**ELECTRICALLY-CAUSED INJURY**		P
5.2.1	Electrical energy source classifications.....:	(See appended table 5.2)	P
5.2.2	ES1, ES2 and ES3 limits	Output: ES1	P
5.2.2.2	Steady-state voltage and current.....:	(See appended table 5.2)	P
5.2.2.3	Capacitance limits .....:	(See appended table 5.2)	P
5.2.2.4	Single pulse limits.....:	(See appended table 5.2)	N/A
5.2.2.5	Limits for repetitive pulses.....:	(See appended table 5.2) and B.4 (faults – hiccup mode)	P
5.2.2.6	Ringing signals .....:	(See Annex H)	N/A
5.2.2.7	Audio signals .....:	(See Clause E.1)	N/A
5.3	Protection against electrical energy sources		P
5.3.1	General Requirements for accessible parts to ordinary, instructed and skilled persons	Bare conductors at ES3 are located inside plastic enclosure. Ordinary person can't access live parts. No accessible conductors at ES2 & ES3.	P
5.3.2.1	Accessibility to electrical energy sources and safeguards	Unit is accessible by ordinary person (output is ES1 circuit).	P
5.3.2.2	Contact requirements		P
	a) Test with test probe from Annex V .....:	No openings. ES3 or ES2 circuit not accessible. No ES3 basic safeguard accessible.	P
	b) Electric strength test potential (V).....:	Test finger cannot penetrate into the unit.	N/A
	c) Air gap (mm) .....:	See above.	N/A
5.3.2.4	Terminals for connecting stripped wire		N/A
5.4	Insulation materials and requirements		P
5.4.1.2	Properties of insulating material	No hygroscopic insulation materials used.	P
5.4.1.3	Humidity conditioning ..... :	(See sub-clause 5.4.8)	P
5.4.1.4	Maximum operating temperature for insulating materials .....:	(See appended table 5.4.1.4)	P
5.4.1.5	Pollution degree.....:	PD2	—
5.4.1.5.2	Test for pollution degree 1 environment and for an insulating compound		N/A
5.4.1.5.3	Thermal cycling		N/A
5.4.1.6	Insulation in transformers with varying dimensions	No such transformer used.	N/A
5.4.1.7	Insulation in circuits generating starting pulses	No such circuits.	N/A
5.4.1.8	Determination of working voltage		P

IEC 62368-1			
Clause	Requirement + Test	Result - Remark	Verdict
5.4.1.9	Insulating surfaces	An accessible surface was considered conductive for determination of clearances, creepage distances and distance through insulation.	P
5.4.1.10	Thermoplastic parts on which conductive metallic parts are directly mounted		P
5.4.1.10.2	Vicat softening temperature ..... :	(See appended table 5.4.1.10.2)	N/A
5.4.1.10.3	Ball pressure ..... :	Phenolic material used. No test needed.	N/A
5.4.2	Clearances		P
5.4.2.2	Determining clearance using peak working voltage	(See appended table 5.4.2.2)	P
5.4.2.3	Determining clearance using required withstand voltage ..... :	(See appended table 5.4.2.3)	P
	a) a.c. mains transient voltage..... :	2500 V	—
	b) d.c. mains transient voltage ..... :	No d.c. mains	—
	c) external circuit transient voltage..... :	No external circuit in the sense of this clause.	—
	d) transient voltage determined by measurement... :	Measurement not relevant	—
5.4.2.4	Determining the adequacy of a clearance using an electric strength test	(See appended table 5.4.2.4)	P
5.4.2.5	Multiplication factors for clearances and test voltages..... :	Maximum specified altitude ≤ 2000 m.	N/A
5.4.3	Creepage distances..... :	(See appended table 5.4.3)	P
5.4.3.1	General		P
5.4.3.3	Material Group ..... :	Material group IIIb considered.	—
5.4.4	Solid insulation		P
5.4.4.2	Minimum distance through insulation ..... :	(See appended table 5.4.4.2)	P
5.4.4.3	Insulation compound forming solid insulation		P
5.4.4.4	Solid insulation in semiconductor devices	Approved optocoupler used.	P
5.4.4.5	Cemented joints		N/A
5.4.4.6	Thin sheet material	Transformer provided with triple insulated wire for secondary winding. Tape used for mechanical protection only.	P
5.4.4.6.1	General requirements		P
5.4.4.6.2	Separable thin sheet material		P
	Number of layers (pcs) ..... :	Min. 2 layers between primary and secondary winding.	P
5.4.4.6.3	Non-separable thin sheet material	No such material.	N/A

IEC 62368-1			
Clause	Requirement + Test	Result - Remark	Verdict
5.4.4.6.4	Standard test procedure for non-separable thin sheet material ..... :	(See appended Table 5.4.9)	N/A
5.4.4.6.5	Mandrel test		N/A
5.4.4.7	Solid insulation in wound components	Transformer provided with triple insulated wire for secondary winding.	P
5.4.4.9	Solid insulation at frequencies >30 kHz ..... :	(See appended Table 5.4.4.9)	P
5.4.5	Antenna terminal insulation	No such terminal.	N/A
5.4.5.1	General		N/A
5.4.5.2	Voltage surge test		N/A
	Insulation resistance (MΩ) ..... :		—
5.4.6	Insulation of internal wire as part of supplementary safeguard..... :	(See appended table 5.4.4.2)	N/A
5.4.7	Tests for semiconductor components and for cemented joints	No such component.	N/A
5.4.8	Humidity conditioning		P
	Relative humidity (%) ..... :	95%	—
	Temperature (°C) .....:	40°C	—
	Duration (h) ..... :	120 h	—
5.4.9	Electric strength test..... :	(See appended table 5.4.9)	P
5.4.9.1	Test procedure for a solid insulation type test	Method 1 (transient voltages) is the worst case.	P
5.4.9.2	Test procedure for routine tests	Routine test on transformer checked.	P
5.4.10	Protection against transient voltages between external circuit	No such external circuits.	N/A
5.4.10.1	Parts and circuits separated from external circuits	(See appended table 5.4.9)	N/A
5.4.10.2	Test methods		N/A
5.4.10.2.1	General		N/A
5.4.10.2.2	Impulse test ..... :	(See appended table 5.4.9)	N/A
5.4.10.2.3	Steady-state test ..... :	(See appended table 5.4.9)	N/A
5.4.11	Insulation between external circuits and earthed circuitry ..... :	(See appended table 5.4.9)	N/A
5.4.11.1	Exceptions to separation between external circuits and earth		N/A
5.4.11.2	Requirements		N/A
	Rated operating voltage U_{op} (V) ..... :		—
	Nominal voltage U_{peak} (V) ..... :		—
	Max increase due to variation U_{sp} ..... :		—
	Max increase due to ageing ΔU_{sa} ..... :		—

IEC 62368-1			
Clause	Requirement + Test	Result - Remark	Verdict
	$U_{op} = U_{peak} + \Delta U_{sp} + \Delta U_{sa}$.....:		—
5.5	Components as safeguards		
5.5.1	General		P
5.5.2	Capacitors and RC units		P
5.5.2.1	General requirement	Capacitors and RC units that serve as a safeguard comply with IEC 60384-14 and clause G.11 of this standard.	P
5.5.2.2	Safeguards against capacitor discharge after disconnection of a connector .....:	(See appended table 5.5.2.2)	P
5.5.3	Transformers	(See Annex G.5.3)	P
5.5.4	Optocouplers	(See sub-clause 5.4 or Annex G.12). Approved optocoupler used.	P
5.5.5	Relays	(See Annex G.2)	N/A
5.5.6	Resistors	No resistors used as a safeguard. (See Annex G.10)	N/A
5.5.7	SPD's	No SPD's. (See Annex G.8)	N/A
5.5.7.1	Use of an SPD connected to reliable earthing	No varistor between the mains and earth.	N/A
5.5.7.2	Use of an SPD between mains and protective earth		N/A
5.5.8	Insulation between the mains and external circuit consisting of a coaxial cable .....:	No such external circuit.	N/A
5.6	Protective conductor		P
5.6.2	Requirement for protective conductors		P
5.6.2.1	General requirements		P
5.6.2.2	Colour of insulation	The insulation of protective bonding conductor is green-and-yellow.	P
5.6.3	Requirement for protective earthing conductors	Approved appliance inlet is used.	N/A
	Protective earthing conductor size (mm^2) ..... :		—
5.6.4	Requirement for protective bonding conductors	Applicable only for product which are Class I.	P
5.6.4.1	Protective bonding conductors	Protective bonding conductor complies with conductor size in table G.5.	P
	Protective bonding conductor size (mm^2). ..... :	Min. AWG18	—
	Protective current rating (A) ..... :	16 A (13 A for UK and 20 A for US/CAN)	—
5.6.4.3	Current limiting and overcurrent protective devices	No component in parallel to protective device.	N/A
5.6.5	Terminals for protective conductors		P

IEC 62368-1			
Clause	Requirement + Test	Result - Remark	Verdict
5.6.5.1	Requirement		P
	Conductor size (mm^2), nominal thread diameter (mm). .....:	Min. AWG18	P
5.6.5.2	Corrosion	No risk of corrosion.	P
5.6.6	Resistance of the protective system	Applicable for Class I model only.	P
5.6.6.1	Requirements	Protective bonding conductors and their terminations do not have excessive resistance. Checked with 5.6.6.2.	P
5.6.6.2	Test Method Resistance (Ω) .....:	(See appended table 5.6.6.2)	P
5.6.7	Reliable earthing		N/A
5.7	Prospective touch voltage, touch current and protective conductor current		P
5.7.2	Measuring devices and networks		P
5.7.2.1	Measurement of touch current .....:	(See appended table 5.7.4)	P
5.7.2.2	Measurement of prospective touch voltage		P
5.7.3	Equipment set-up, supply connections and earth connections		P
	System of interconnected equipment (separate connections/single connection) .....:	Not a system of interconnected equipment.	—
	Multiple connections to mains (one connection at a time/simultaneous connections).....:	No multiple connections to the mains.	—
5.7.4	Earthed conductive accessible parts .....:	(See appended Table 5.7.4)	P
5.7.5	Protective conductor current	Measured touch current does not exceed ES2 limits in 5.2.2.2 therefore measurement of protective conductor current is not relevant.	N/A
	Supply Voltage (V) .....:		—
	Measured current (mA) .....:		—
	Instructional Safeguard .....:	(See F.4 and F.5)	N/A
5.7.6	Prospective touch voltage and touch current due to external circuits	No external circuits.	N/A
5.7.6.1	Touch current from coaxial cables		N/A
5.7.6.2	Prospective touch voltage and touch current from external circuits		N/A
5.7.7	Summation of touch currents from external circuits	No external circuits.	N/A
	a) Equipment with earthed external circuits Measured current (mA) .....:		N/A
	b) Equipment whose external circuits are not referenced to earth. Measured current (mA).....:		N/A

6	**ELECTRICALLY- CAUSED FIRE**	P

IEC 62368-1			
Clause	Requirement + Test	Result - Remark	Verdict
6.2	Classification of power sources (PS) and potential ignition sources (PIS)		P
6.2.2	Power source circuit classifications	All circuits inside the equipment are presumed PS3, arcing and/or resistive PIS. Secondary output is classified PS2.	P
6.2.2.1	General		P
6.2.2.2	Power measurement for worst-case load fault ... :	(See appended table 6.2.2)	P
6.2.2.3	Power measurement for worst-case power source fault..... :	(See appended table 6.2.2)	P
6.2.2.4	PS1 ..... :	(See appended table 6.2.2)	N/A
6.2.2.5	PS2 ..... :	(See appended table 6.2.2)	P
6.2.2.6	PS3 ..... :	(See appended table 6.2.2)	P
6.2.3	Classification of potential ignition sources		P
6.2.3.1	Arcing PIS ..... :	(See appended table 6.2.3.1) Complete primary side considered arcing PIS.	P
6.2.3.2	Resistive PIS ..... :	(See appended table 6.2.3.2) Primary and secondary circuit considered resistive PIS.	P
6.3	Safeguards against fire under normal operating and abnormal operating conditions		P
6.3.1 (a)	No ignition and attainable temperature value less than 90 % defined by ISO 871 or less than 300 °C for unknown materials.....:	(See appended table 5.4.1.5, 6.3.2, 9.0, B.2.6)	P
6.3.1 (b)	Combustible materials outside fire enclosure	No parts outside the enclosure except output cord. Plastic housing rated V-0. Output is considered as PS2.	N/A
6.4	Safeguards against fire under single fault conditions		P
6.4.1	Safeguard Method	Control fire spread. Selection and application of supplementary safeguards for components, wiring, materials and constructional measures that reduce the spread of fire. In addition, fire enclosure is provided.	P
6.4.2	Reduction of the likelihood of ignition under single fault conditions in PS1 circuits	No PS1 circuit.	N/A
6.4.3	Reduction of the likelihood of ignition under single fault conditions in PS2 and PS3 circuits	This method not applied.	N/A
6.4.3.1	General		N/A
6.4.3.2	Supplementary Safeguards		N/A
	Special conditions if conductors on printed boards are opened or peeled		N/A
6.4.3.3	Single Fault Conditions..... :	(See appended table 6.4.3)	N/A

IEC 62368-1			
Clause	Requirement + Test	Result - Remark	Verdict
	Special conditions for temperature limited by fuse		N/A
6.4.4	Control of fire spread in PS1 circuits	No PS1 circuit.	N/A
6.4.5	Control of fire spread in PS2 circuits	No such circuits in the unit. All circuits are considered PS3.	N/A
6.4.5.2	Supplementary safeguards ..... :	(See appended tables 4.1.2 and Annex G)	N/A
6.4.6	Control of fire spread in PS3 circuit	In addition to the compliance with 6.4.5, a fire enclosure that complies with 6.4.8 is provided with the equipment.	P
6.4.7	Separation of combustible materials from a PIS	Separation from PIS to fire enclosure comply with 6.4.8.4.	P
6.4.7.1	General..... :	(See tables 6.2.3.1 and 6.2.3.2)	P
6.4.7.2	Separation by distance	All components and combustible materials other than small parts are either rated at least V-1 or mounted on material with rating minimum V-0.	P
6.4.7.3	Separation by a fire barrier		N/A
6.4.8	Fire enclosures and fire barriers	Equipment enclosure is evaluated for fire enclosure.	P
6.4.8.1	Fire enclosure and fire barrier material properties		P
6.4.8.2.1	Requirements for a fire barrier		P
6.4.8.2.2	Requirements for a fire enclosure	Equipment fire enclosure is made of materials rated V-0 minimum.	P
6.4.8.3	Constructional requirements for a fire enclosure and a fire barrier		P
6.4.8.3.1	Fire enclosure and fire barrier openings	No openings in a fire enclosure.	P
6.4.8.3.2	Fire barrier dimensions		N/A
6.4.8.3.3	Top Openings in Fire Enclosure: dimensions (mm) .....:	No openings in a fire enclosure.	N/A
	Needle Flame test		N/A
6.4.8.3.4	Bottom Openings in Fire Enclosure, condition met a), b) and/or c) dimensions (mm) .....:	No openings in a fire enclosure.	N/A
	Flammability tests for the bottom of a fire enclosure .....:		N/A
6.4.8.3.5	Integrity of the fire enclosure, condition met: a), b) or c)..... :	No door or cover in fire enclosure that can be open by ordinary person.	N/A
6.4.8.4	Separation of PIS from fire enclosure and fire barrier distance (mm) or flammability rating.....:	Fire enclosure is made of min. V-0 materials.	P
6.5	Internal and external wiring		P
6.5.1	Requirements		P

IEC 62368-1			
Clause	Requirement + Test	Result - Remark	Verdict
6.5.2	Cross-sectional area (mm^2) .....:	Min. AWG18 (VW-1). Refer to the List of critical components.	—
6.5.3	Requirements for interconnection to building wiring .....:	No interconnection to building wiring.	N/A
6.6	Safeguards against fire due to connection to additional equipment	See below.	P
	External port limited to PS2 or complies with Clause Q.1	Output limited to PS2/LPS.	P

IEC 62368-1			
Clause	Requirement + Test	Result - Remark	Verdict

7	**INJURY CAUSED BY HAZARDOUS SUBSTANCES**		N/A
7.2	Reduction of exposure to hazardous substances	No hazardous substances.	N/A
7.3	Ozone exposure	Unit does not produce ozone.	N/A
7.4	Use of personal safeguards (PPE)	No PPE specified.	N/A
	Personal safeguards and instructions.....:		—
7.5	Use of instructional safeguards and instructions		N/A
	Instructional safeguard (ISO 7010) .....:		—
7.6	Batteries ..... :	(See Annex M)	N/A

8	**MECHANICALLY-CAUSED INJURY**		P
8.1	General		P
8.2	Mechanical energy source classifications	Sharp edges and corners, and equipment mass are both classified as MS1. There are no moving parts inside the unit neither equipment is intended for wall/ceiling mounting.	P
8.3	Safeguards against mechanical energy sources	No safeguard is required to be interposed between MS1 and an ordinary person.	N/A
8.4	Safeguards against parts with sharp edges and corners	No parts with sharp edges or corners.	N/A
8.4.1	Safeguards		N/A
8.5	Safeguards against moving parts	No moving parts.	N/A
8.5.1	MS2 or MS3 part required to be accessible for the function of the equipment	No such part.	N/A
8.5.2	Instructional Safeguard ..... :		—
8.5.4	Special categories of equipment comprising moving parts		N/A
8.5.4.1	Large data storage equipment	Not such product.	N/A
8.5.4.2	Equipment having electromechanical device for destruction of media	The EUT is not a media destruction device.	N/A
8.5.4.2.1	Safeguards and Safety Interlocks..... :	(See Annex F.4 and Annex K)	N/A
8.5.4.2.2	Instructional safeguards against moving parts		N/A
	Instructional Safeguard ..... :		—
8.5.4.2.3	Disconnection from the supply		N/A
8.5.4.2.4	Probe type and force (N)..... :		N/A
8.5.5	High Pressure Lamps	No high-pressure lamps in the unit.	N/A
8.5.5.1	Energy Source Classification		N/A
8.5.5.2	High Pressure Lamp Explosion Test..... :	(See appended table 8.5.5.2)	N/A

IEC 62368-1			
Clause	Requirement + Test	Result - Remark	Verdict
8.6	Stability		N/A
8.6.1	Product classification	Equipment mass is < 7 kg and classified MS1. No stability requirements are applicable.	N/A
	Instructional Safeguard.....:	The EUT is not a TV set.	—
8.6.2	Static stability		N/A
8.6.2.2	Static stability test		N/A
	Applied Force..... :		—
8.6.2.3	Downward Force Test		N/A
8.6.3	Relocation stability test		N/A
	Unit configuration during 10° tilt ..... :		—
8.6.4	Glass slide test		N/A
8.6.5	Horizontal force test (Applied Force) ..... :		N/A
	Position of feet or movable parts..... :		—
8.7	Equipment mounted to wall or ceiling		N/A
8.7.1	Mounting Means (Length of screws (mm) and mounting surface) ..... :		N/A
8.7.2	Direction and applied force..... :		N/A
8.8	Handles strength	No handles.	N/A
8.8.1	Classification		N/A
8.8.2	Applied Force ..... :		N/A
8.9	Wheels or casters attachment requirements	No wheels or casters.	N/A
8.9.1	Classification		N/A
8.9.2	Applied force..... :		—
8.10	Carts, stands and similar carriers	No cart, stand or similar carriers.	N/A
8.10.1	General		N/A
8.10.2	Marking and instructions		N/A
	Instructional Safeguard..... :		—
8.10.3	Cart, stand or carrier loading test and compliance		N/A
	Applied force..... :		—
8.10.4	Cart, stand or carrier impact test		N/A
8.10.5	Mechanical stability		N/A
	Applied horizontal force (N)..... :		—
8.10.6	Thermoplastic temperature stability (°C) ..... :		N/A
8.11	Mounting means for rack mounted equipment	The EUT is not intended for rack mounting.	N/A
8.11.1	General		N/A
8.11.2	Product Classification		N/A

IEC 62368-1			
Clause	Requirement + Test	Result - Remark	Verdict
8.11.3	Mechanical strength test, variable *N* ..... :		N/A
8.11.4	Mechanical strength test 250N, including end stops		N/A
8.12	Telescoping or rod antennas	No telescoping or rod antennas.	N/A
	Button/Ball diameter (mm) ..... :		—
9	**THERMAL BURN INJURY**		P
9.2	Thermal energy source classifications	All accessible surfaces are classified as TS1.	P
9.3	Safeguard against thermal energy sources	No safeguard needs to be interposed between TS1 and ordinary person. Enclosure is used for safeguard for TS3 (internal parts).	N/A
9.4	Requirements for safeguards		N/A
9.4.1	Equipment safeguard	All temperatures are limited to TS1. See enclosed table.	N/A
9.4.2	Instructional safeguard .....:	No accessible part at TS2 or TS3.	N/A
10	**RADIATION**		N/A
10.2	Radiation energy source classification	No radiation energy sources.	N/A
10.2.1	General classification		N/A
10.3	Protection against laser radiation	No laser source inside the unit.	N/A
	Laser radiation that exists equipment:		—
	Normal, abnormal, single-fault .....:	(See attached laser test report)	N/A
	Instructional safeguard .....:		—
	Tool .....:		—
10.4	Protection against visible, infrared, and UV radiation		N/A
10.4.1	General		N/A
10.4.1.a)	RS3 for Ordinary and instructed persons..... :		N/A
10.4.1.b)	RS3 accessible to a skilled person ..... :		N/A
	Personal safeguard (PPE) instructional safeguard ..... :		—
10.4.1.c)	Equipment visible, IR, UV does not exceed RS1..:		N/A
10.4.1.d)	Normal, abnormal, single-fault conditions ..... :	(See appended table B.3 & B.4)	N/A
10.4.1.e)	Enclosure material employed as safeguard is opaque ..... :		N/A
10.4.1.f)	UV attenuation..... :		N/A
10.4.1.g)	Materials resistant to degradation UV..... :		N/A
10.4.1.h)	Enclosure containment of optical radiation ..... :		N/A

IEC 62368-1			
Clause	Requirement + Test	Result - Remark	Verdict
10.4.1.i)	Exempt Group under normal operating conditions.....:		N/A
10.4.2	Instructional safeguard .....:		N/A
10.5	Protection against x-radiation	No X-Radiation.	N/A
10.5.1	X- radiation energy source that exists equipment :	(See appended table B.3 & B.4)	N/A
	Normal, abnormal, single fault conditions		N/A
	Equipment safeguards.....:		N/A
	Instructional safeguard for skilled person ..... :		N/A
10.5.3	Most unfavourable supply voltage to give maximum radiation ..... :		—
	Abnormal and single-fault condition .....:	(See appended table B.3 & B.4)	N/A
	Maximum radiation (pA/kg).....:		N/A
10.6	Protection against acoustic energy sources	The EUT is not a personal music player.	N/A
10.6.1	General		N/A
10.6.2	Classification		N/A
	Acoustic output, dB(A) .....:		N/A
	Output voltage, unweighted r.m.s. .....:		N/A
10.6.4	Protection of persons		N/A
	Instructional safeguards.....:		N/A
	Equipment safeguard prevent ordinary person to RS2 .....:		—
	Means to actively inform user of increase sound pressure .....:		—
	Equipment safeguard prevent ordinary person to RS2 .....:		—
10.6.5	Requirements for listening devices (headphones, earphones, etc.)		N/A
10.6.5.1	Corded passive listening devices with analog input		N/A
	Input voltage with 94 dB(A) L_{Aeq} acoustic pressure output.....:		—
10.6.5.2	Corded listening devices with digital input		N/A
	Maximum dB(A) .....:		—
10.6.5.3	Cordless listening device		N/A
	Maximum dB(A) .....:		—

B	**NORMAL OPERATING CONDITION TESTS, ABNORMAL OPERATING CONDITION TESTS AND SINGLE FAULT CONDITION TESTS**		P
B.2	Normal Operating Conditions		P

IEC 62368-1			
Clause	Requirement + Test	Result - Remark	Verdict
B.2.1	General requirements .....:	(See Test Item Particulars and appended test tables)	P
	Audio Amplifiers and equipment with audio amplifiers.....:	No audio amplifier within the unit.	N/A
B.2.3	Supply voltage and tolerances	100-240Vac with tolerances +10% / -10% (90-264Vac).	P
B.2.5	Input test .....:	(See appended table B.2.5) The measured input current under normal operating conditions did not exceed the rated current by more than 10%.	P
B.3	Simulated abnormal operating conditions		P
B.3.1	General requirements .....:	(See appended table B.3)	P
B.3.2	Covering of ventilation openings	No ventilation openings.	N/A
B.3.3	D.C. mains polarity test	Unit not intended for connection to d.c. mains.	N/A
B.3.4	Setting of voltage selector.....:	No voltage selector.	N/A
B.3.5	Maximum load at output terminals.....:	Output overload test performed. See table B.3.	P
B.3.6	Reverse battery polarity	No replaceable battery.	N/A
B.3.7	Abnormal operating conditions as specified in Clause E.2.	No audio amplifier in the unit.	N/A
B.3.8	Safeguards functional during and after abnormal operating conditions	During an abnormal operating condition that does not lead to a single fault condition, all safeguards are remained effective. After restoration of normal operating conditions, all safeguards are compliant with applicable requirements. For those abnormal operating conditions that lead to single fault conditions, see Clause B.4.8.	P
B.4	Simulated single fault conditions		P
B.4.2	Temperature controlling device open or short-circuited.....:	No temperature controlling device.	N/A
B.4.3	Motor tests		N/A
B.4.3.1	Motor blocked or rotor locked increasing the internal ambient temperature .....:	No motor.	N/A
B.4.4	Short circuit of functional insulation		P
B.4.4.1	Short circuit of clearances for functional insulation	Clearances for functional insulation that are not evaluated for basic insulation or relevant electric strength test are short-circuited in turn. See appended table B.4.	P

IEC 62368-1			
Clause	Requirement + Test	Result - Remark	Verdict
B.4.4.2	Short circuit of creepage distances for functional insulation	Creepage distances for functional insulation that are not evaluated for basic insulation or relevant electric strength test are short-circuited in turn. See appended table B.4.	P
B.4.4.3	Short circuit of functional insulation on coated printed boards	No coated printed boards.	N/A
B.4.5	Short circuit and interruption of electrodes in tubes and semiconductors	See appended table B.4.	P
B.4.6	Short circuit or disconnect of passive components	See appended table B.4.	P
B.4.7	Continuous operation of components	No such components.	N/A
B.4.8	Class 1 and Class 2 energy sources within limits during and after single fault conditions		P
B.4.9	Battery charging under single fault conditions.... :	(See Annex M). No batteries provided.	N/A
C	**UV RADIATION**		N/A
C.1	Protection of materials in equipment from UV radiation	No UV radiation within the unit.	N/A
C.1.2	Requirements		N/A
C.1.3	Test method		N/A
C.2	UV light conditioning test		N/A
C.2.1	Test apparatus		N/A
C.2.2	Mounting of test samples		N/A
C.2.3	Carbon-arc light-exposure apparatus		N/A
C.2.4	Xenon-arc light exposure apparatus		N/A
D	**TEST GENERATORS**		N/A
D.1	Impulse test generators		N/A
D.2	Antenna interface test generator		N/A
D.3	Electronic pulse generator		N/A
E	**TEST CONDITIONS FOR EQUIPMENT CONTAINING AUDIO AMPLIFIERS**		N/A
E.1	Audio amplifier normal operating conditions		N/A
	Audio signal voltage (V).....:		—
	Rated load impedance (Ω) .....:		—
E.2	Audio amplifier abnormal operating conditions		N/A
F	**EQUIPMENT MARKINGS, INSTRUCTIONS, AND INSTRUCTIONAL SAFEGUARDS**		P
F.1	General requirements		P
	Instructions – Language ..... :	English	—
F.2	Letter symbols and graphical symbols		P
F.2.1	Letter symbols according to IEC60027-1		P

IEC 62368-1			
Clause	Requirement + Test	Result - Remark	Verdict
F.2.2	Graphic symbols IEC, ISO or manufacturer specific		P
F.3	Equipment markings		P
F.3.1	Equipment marking locations	On the housing.	P
F.3.2	Equipment identification markings	Refer to labels.	P
F.3.2.1	Manufacturer identification ..... :	Refer to labels.	—
F.3.2.2	Model identification ..... :	Refer to labels.	—
F.3.3	Equipment rating markings		P
F.3.3.1	Equipment with direct connection to mains		P
F.3.3.2	Equipment without direct connection to mains		N/A
F.3.3.3	Nature of supply voltage ..... :	~ symbol used to identify AC input	—
F.3.3.4	Rated voltage ..... :	Refer to labels.	—
F.3.3.4	Rated frequency..... :	Refer to labels.	—
F.3.3.6	Rated current or rated power ..... :	Refer to labels.	—
F.3.3.7	Equipment with multiple supply connections	No multiple supply connections.	N/A
F.3.4	Voltage setting device		N/A
F.3.5	Terminals and operating devices		N/A
F.3.5.1	Mains appliance outlet and socket-outlet markings..... :	No such device on the equipment.	N/A
F.3.5.2	Switch position identification marking ..... :	No switch.	N/A
F.3.5.3	Replacement fuse identification and rating markings..... :	T2AL/250V	P
F.3.5.4	Replacement battery identification marking..... :	No battery.	N/A
F.3.5.5	Terminal marking location		N/A
F.3.6	Equipment markings related to equipment classification		P
F.3.6.1	Class I Equipment	Appliance inlet used (for Class I model).	P
F.3.6.1.1	Protective earthing conductor terminal	Part of appliance inlet connector (for Class I model).	P
F.3.6.1.2	Neutral conductor terminal		N/A
F.3.6.1.3	Protective bonding conductor terminals		N/A
F.3.6.2	Class II equipment (IEC60417-5172)	Correct symbol used (for Class II model).	P
F.3.6.2.1	Class II equipment with or without functional earth	No functional earthing. Symbol IEC60417-5172 provided on the unit (for Class II model).	N/A
F.3.6.2.2	Class II equipment with functional earth terminal marking		N/A
F.3.7	Equipment IP rating marking ..... :	IPX0	—

IEC 62368-1			
Clause	Requirement + Test	Result - Remark	Verdict
F.3.8	External power supply output marking		P
F.3.9	Durability, legibility and permanence of marking		P
F.3.10	Test for permanence of markings	Marking remain legible after rubbing test with a piece of cloth soaked with water and n-hexane. Marking is printed to enclosure. Test repeated at SIQ Ljubljana.	P
F.4	Instructions		P
	a) Equipment for use in locations where children not likely to be present - marking		N/A
	b) Instructions given for installation or initial use		N/A
	c) Equipment intended to be fastened in place		N/A
	d) Equipment intended for use only in restricted access area		N/A
	e) Audio equipment terminals classified as ES3 and other equipment with terminals marked in accordance F.3.6.1	No audio terminals.	N/A
	f) Protective earthing employed as safeguard		N/A
	g) Protective earthing conductor current exceeding ES 2 limits		N/A
	h) Symbols used on equipment	All graphical symbols marked on the unit described in the instruction.	P
	i) Permanently connected equipment not provided with all-pole mains switch		N/A
j)	j) Replaceable components or modules providing safeguard function	No such component.	N/A
F.5	Instructional safeguards		N/A
	Where “instructional safeguard” is referenced in the test report it specifies the required elements, location of marking and/or instruction		N/A
G	**COMPONENTS**		P
G.1	**Switches**		N/A
G.1.1	General requirements	No switch provided.	N/A
G.1.2	Ratings, endurance, spacing, maximum load		N/A
G.2	**Relays**		N/A
G.2.1	General requirements	No relay.	N/A
G.2.2	Overload test		N/A
G.2.3	Relay controlling connectors supply power		N/A
G.2.4	Mains relay, modified as stated in G.2		N/A
G.3	**Protection Devices**		P
G.3.1	Thermal cut-offs		N/A

IEC 62368-1			
Clause	Requirement + Test	Result - Remark	Verdict
G.3.1.1a) &b)	Thermal cut-outs separately approved according to IEC 60730 with conditions indicated in a) & b)		N/A
G.3.1.1c)	Thermal cut-outs tested as part of the equipment as indicated in c)		N/A
G.3.1.2	Thermal cut-off connections maintained and secure		N/A
G.3.2	Thermal links		N/A
G.3.2.1a)	Thermal links separately tested with IEC 60691		N/A
G.3.2.1b)	Thermal links tested as part of the equipment		N/A
	Aging hours (H) .....:		—
	Single Fault Condition .....:		—
	Test Voltage (V) and Insulation Resistance (Ω) .:		—
G.3.3	PTC Thermistors		N/A
G.3.4	Overcurrent protection devices	Internal fuse F1 used. Refer to List of critical components.	P
G.3.5	Safeguards components not mentioned in G.3.1 to G.3.5		N/A
G.3.5.1	Non-resettable devices suitably rated and marking provided		N/A
G.3.5.2	Single faults conditions ..... :	(See appended Table B.4)	N/A
G.4	**Connectors**		P
G.4.1	Spacings	Approved appliance inlet used for input. Special connector used for output.	P
G.4.2	Mains connector configuration ..... :	See above.	P
G.4.3	Plug is shaped that insertion into mains socket-outlets or appliance coupler is unlikely	Secondary connector with special plug. Insertion into mains is unlikely.	N/A
G.5	**Wound Components**		P
G.5.1	Wire insulation in wound components	Approved triple insulated wire used for secondary winding of T1. (See Annex J)	P
G.5.1.2 a)	Two wires in contact inside wound component, angle between 45° and 90°	Mechanical separation provided between the windings.	P
G.5.1.2 b)	Construction subject to routine testing	Mechanical separation does not provide basic, supplementary or reinforced insulation.	P
G.5.2	Endurance test on wound components	Not required, since mechanical separation/protection in provided.	N/A
G.5.2.1	General test requirements		N/A
G.5.2.2	Heat run test		N/A
	Time (s) ..... :		—
	Temperature (°C) ..... :		—

IEC 62368-1			
Clause	Requirement + Test	Result - Remark	Verdict
G.5.2.3	Wound Components supplied by mains		N/A
G.5.3	**Transformers**		P
G.5.3.1	Requirements applied (IEC61204-7, IEC61558-1/-2, and/or IEC62368-1)....:	Transformer T1 complies with G.5.3.2 and G.5.3.3	P
	Position ....:	T1 (primary to secondary)	—
	Method of protection ....:	Primary current limitation.	—
G.5.3.2	Insulation		P
	Protection from displacement of windings..... :	Tape, triple insulated wire and bobbin.	—
G.5.3.3	Overload test .... :	(See appended table B.3)	P
G.5.3.3.1	Test conditions		P
G.5.3.3.2	Winding Temperatures testing in the unit		P
G.5.3.3.3	Winding Temperatures - Alternative test method		N/A
G.5.4	**Motors**		N/A
G.5.4.1	General requirements	No motor.	N/A
	Position ....:		—
G.5.4.2	Test conditions		N/A
G.5.4.3	Running overload test		N/A
G.5.4.4	Locked-rotor overload test		N/A
	Test duration (days) ....:		—
G.5.4.5	Running overload test for d.c. motors in secondary circuits		N/A
G.5.4.5.2	Tested in the unit		N/A
	Electric strength test (V) ....:		—
G.5.4.5.3	Tested on the Bench - Alternative test method; test time (h) ....:		N/A
	Electric strength test (V) ....:		—
G.5.4.6	Locked-rotor overload test for d.c. motors in secondary circuits		N/A
G.5.4.6.2	Tested in the unit		N/A
	Maximum Temperature ....:		N/A
	Electric strength test (V) ....:		N/A
G.5.4.6.3	Tested on the bench - Alternative test method; test time (h)....:		N/A
	Electric strength test (V) ....:		N/A
G.5.4.7	Motors with capacitors		N/A
G.5.4.8	Three-phase motors		N/A
G.5.4.9	Series motors		N/A
	Operating voltage ....:		—

IEC 62368-1			
Clause	Requirement + Test	Result - Remark	Verdict
G.6	**Wire Insulation**		P
G.6.1	General	Approved triple insulated wire is used inside transformers (complies with Annex J). Refer to List of critical components.	P
G.6.2	Solvent-based enamel wiring insulation		N/A
G.7	**Mains supply cords**		N/A
G.7.1	General requirements	Power supply cord is not part of investigation	N/A
	Type ..... :		—
	Rated current (A)..... :		—
	Cross-sectional area (mm^2), (AWG) .....:		—
G.7.2	Compliance and test method		N/A
G.7.3	Cord anchorages and strain relief for non-detachable power supply cords		N/A
G.7.3.2	Cord strain relief		N/A
G.7.3.2.1	Requirements		N/A
	Strain relief test force (N) ..... :		—
G.7.3.2.2	Strain relief mechanism failure		N/A
G.7.3.2.3	Cord sheath or jacket position, distance (mm) ... :		—
G.7.3.2.4	Strain relief comprised of polymeric material		N/A
G.7.4	Cord Entry .....:	(See appended table 5.4.11.1)	N/A
G.7.5	Non-detachable cord bend protection		N/A
G.7.5.1	Requirements		N/A
G.7.5.2	Mass (g) .....:		—
	Diameter (m) ..... :		—
	Temperature (°C) ..... :		—
G.7.6	Supply wiring space		N/A
G.7.6.2	Stranded wire		N/A
G.7.6.2.1	Test with 8 mm strand		N/A
G.8	**Varistors**		N/A
G.8.1	General requirements	No varistors used.	N/A
G.8.2	Safeguard against shock		N/A
G.8.3	Safeguard against fire		N/A
G.8.3.2	Varistor overload test ..... :	(See appended table B.3)	N/A
G.8.3.3	Temporary overvoltage ..... :	(See appended table B.3)	N/A
G.9	**Integrated Circuit (IC) Current Limiters**		N/A
G.9.1 a)	Manufacturer defines limit at max. 5A.	No such component.	N/A
G.9.1 b)	Limiters do not have manual operator or reset		N/A

IEC 62368-1			
Clause	Requirement + Test	Result - Remark	Verdict
G.9.1 c)	Supply source does not exceed 250 VA .....:		—
G.9.1 d)	IC limiter output current (max. 5A).....:		—
G.9.1 e)	Manufacturers' defined drift .....:		—
G.9.2	Test Program 1		N/A
G.9.3	Test Program 2		N/A
G.9.4	Test Program 3		N/A
G.10	**Resistors**		N/A
G.10.1	General requirements	No resistor as a safeguard in the meaning of this clause.	N/A
G.10.2	Resistor test		N/A
G.10.3	Test for resistors serving as safeguards between the mains and an external circuit consisting of a coaxial cable		N/A
G.10.3.1	General requirements		N/A
G.10.3.2	Voltage surge test		N/A
G.10.3.3	Impulse test		N/A
G.11	**Capacitor and RC units**		P
G.11.1	General requirements		P
G.11.2	Conditioning of capacitors and RC units		P
G.11.3	Rules for selecting capacitors	Certified capacitors used. Refer to List of critical components.	P
G.12	**Optocouplers**		P
	Optocouplers comply with IEC 60747-5-5:2007 Spacing or Electric Strength Test (specify option and test results) ..... :	Approved optocouplers used. Refer to List of critical components.	P
	Type test voltage Vini .....:	Considered.	—
	Routine test voltage, Vini,b .....:	Considered.	—
G.13	**Printed boards**		P
G.13.1	General requirements	Approved printed board used. Refer to List of critical components.	P
G.13.2	Uncoated printed boards		P
G.13.3	Coated printed boards		N/A
G.13.4	Insulation between conductors on the same inner surface	No inner layers.	N/A
	Compliance with cemented joint requirements (Specify construction) .....:		—
G.13.5	Insulation between conductors on different surfaces	PCB tracks provided only on one side (bottom).	N/A
	Distance through insulation ..... :	(See appended table 5.4.4.5)	N/A
	Number of insulation layers (pcs) .....:		—

IEC 62368-1			
Clause	Requirement + Test	Result - Remark	Verdict
G.13.6	Tests on coated printed boards		N/A
G.13.6.1	Sample preparation and preliminary inspection		N/A
G.13.6.2a)	Thermal conditioning		N/A
G.13.6.2b)	Electric strength test		N/A
G.13.6.2c)	Abrasion resistance test		N/A
G.14	**Coating on components terminals**		N/A
G.14.1	Requirements .....:	No special coating.	N/A
G.15	**Liquid filled components**		N/A
G.15.1	General requirements	No LFC.	N/A
G.15.2	Requirements		N/A
G.15.3	Compliance and test methods		N/A
G.15.3.1	Hydrostatic pressure test		N/A
G.15.3.2	Creep resistance test		N/A
G.15.3.3	Tubing and fittings compatibility test		N/A
G.15.3.4	Vibration test		N/A
G.15.3.5	Thermal cycling test		N/A
G.15.3.6	Force test		N/A
G.15.4	Compliance		N/A
G.16	**IC including capacitor discharge function (ICX)**		N/A
a)	Humidity treatment in accordance with sc5.4.8 – 120 hours	No such component.	N/A
b)	Impulse test using circuit 2 with Uc = to transient voltage ..... :		N/A
C1)	Application of ac voltage at 110% of rated voltage for 2.5 minutes		N/A
C2)	Test voltage ..... :		—
D1)	10,000 cycles on and off using capacitor with smallest capacitance resistor with largest resistance specified by manufacturer		N/A
D2)	Capacitance ..... :		—
D3)	Resistance ..... :		—
H	**CRITERIA FOR TELEPHONE RINGING SIGNALS**		N/A
H.1	General	No ringing generator.	N/A
H.2	Method A		N/A
H.3	Method B		N/A
H.3.1	Ringing signal		N/A
H.3.1.1	Frequency (Hz) .....:		—
H.3.1.2	Voltage (V) .....:		—
H.3.1.3	Cadence; time (s) and voltage (V) .....:		—

IEC 62368-1			
Clause	Requirement + Test	Result - Remark	Verdict
H.3.1.4	Single fault current (mA): ..... :		—
H.3.2	Tripping device and monitoring voltage..... :		N/A
H.3.2.1	Conditions for use of a tripping device or a monitoring voltage complied with		N/A
H.3.2.2	Tripping device		N/A
H.3.2.3	Monitoring voltage (V) ..... :		—
J	**INSULATED WINDING WIRES FOR USE WITHOUT INTERLEAVED INSULATION**		P
	General requirements	Approved TIW used. See list of critical components. No additional testing considered required.	P
K	**SAFETY INTERLOCKS**		N/A
K.1	General requirements	No safety interlocks.	N/A
K.2	Components of safety interlock safeguard mechanism	(See Annex G)	N/A
K.3	Inadvertent change of operating mode		N/A
K.4	Interlock safeguard override		N/A
K.5	Fail-safe		N/A
	Compliance..... :	(See appended table B.4)	N/A
K.6	Mechanically operated safety interlocks		N/A
K.6.1	Endurance requirement		N/A
K.6.2	Compliance and Test method ..... :		N/A
K.7	Interlock circuit isolation		N/A
K.7.1	Separation distance for contact gaps & interlock circuit elements (type and circuit location) ..... :		N/A
K.7.2	Overload test, Current (A) ..... :		N/A
K.7.3	Endurance test		N/A
K.7.4	Electric strength test ..... :	(See appended table 5.4.11)	N/A
L	**DISCONNECT DEVICES**		P
L.1	General requirements	Appliance coupler considered as a disconnect device.	P
L.2	Permanently connected equipment	Not permanently connected equipment.	N/A
L.3	Parts that remain energized	No parts remain energized after disconnection.	P
L.4	Single phase equipment	The disconnect device disconnects both poles simultaneously.	P
L.5	Three-phase equipment	Single phase unit.	N/A
L.6	Switches as disconnect devices	No switches.	N/A

IEC 62368-1			
Clause	Requirement + Test	Result - Remark	Verdict
L.7	Plugs as disconnect devices	The appliance coupler is regarded as disconnect device, no warning is required.	N/A
L.8	Multiple power sources	One power source only.	N/A
M	**EQUIPMENT CONTAINING BATTERIES AND THEIR PROTECTION CIRCUITS**		N/A
M.1	General requirements	No battery.	N/A
M.2	Safety of batteries and their cells		N/A
M.2.1	Requirements		N/A
M.2.2	Compliance and test method (identify method) .. :		N/A
M.3	Protection circuits		N/A
M.3.1	Requirements		N/A
M.3.2	Tests		N/A
	- Overcharging of a rechargeable battery		N/A
	- Unintentional charging of a non-rechargeable battery		N/A
	- Reverse charging of a rechargeable battery		N/A
	- Excessive discharging rate for any battery		N/A
M.3.3	Compliance ..... :	(See appended Tables and Annex M and M.4)	N/A
M.4	Additional safeguards for equipment containing secondary lithium battery		N/A
M.4.1	General		N/A
M.4.2	Charging safeguards		N/A
M.4.2.1	Charging operating limits		N/A
M.4.2.2a)	Charging voltage, current and temperature..... :	(See Table M.4)	—
M.4.2.2 b)	Single faults in charging circuitry ..... :	(See Annex B.4)	—
M.4.3	Fire Enclosure		N/A
M.4.4	Endurance of equipment containing a secondary lithium battery		N/A
M.4.4.2	Preparation		N/A
M.4.4.3	Drop and charge/discharge function tests		N/A
	Drop		N/A
	Charge		N/A
	Discharge		N/A
M.4.4.4	Charge-discharge cycle test		N/A
M.4.4.5	Result of charge-discharge cycle test		N/A
M.5	Risk of burn due to short circuit during carrying		N/A
M.5.1	Requirement		N/A
M.5.2	Compliance and Test Method (Test of P.2.3)		N/A

IEC 62368-1			
Clause	Requirement + Test	Result - Remark	Verdict
M.6	Prevention of short circuits and protection from other effects of electric current		N/A
M.6.1	Short circuits		N/A
M.6.1.1	General requirements		N/A
M.6.1.2	Test method to simulate an internal fault		N/A
M.6.1.3	Compliance (Specify M.6.1.2 or alternative method) .....:		N/A
M.6.2	Leakage current (mA) .....:		N/A
M.7	Risk of explosion from lead acid and NiCd batteries		N/A
M.7.1	Ventilation preventing explosive gas concentration		N/A
M.7.2	Compliance and test method		N/A
M.8	Protection against internal ignition from external spark sources of lead acid batteries		N/A
M.8.1	General requirements		N/A
M.8.2	Test method		N/A
M.8.2.1	General requirements		N/A
M.8.2.2	Estimation of hypothetical volume *V*z (m^3/s).....:		—
M.8.2.3	Correction factors .....:		—
M.8.2.4	Calculation of distance *d* (mm) .....:		—
M.9	Preventing electrolyte spillage		N/A
M.9.1	Protection from electrolyte spillage		N/A
M.9.2	Tray for preventing electrolyte spillage		N/A
M.10	Instructions to prevent reasonably foreseeable misuse (Determination of compliance: inspection, data review; or abnormal testing) .....:		N/A
N	**ELECTROCHEMICAL POTENTIALS**		N/A
	Metal(s) used.....:	Pollution degree considered.	—
O	**MEASUREMENT OF CREEPAGE DISTANCES AND CLEARANCES**		P
	Figures O.1 to O.20 of this Annex applied .....:	Considered.	—
P	**SAFEGUARDS AGAINST ENTRY OF FOREIGN OBJECTS AND SPILLAGE OF INTERNAL LIQUIDS**		P
P.1	General requirements	No openings.	P
P.2.2	Safeguards against entry of foreign object		N/A
	Location and Dimensions (mm) .....:		—
P.2.3	Safeguard against the consequences of entry of foreign object		N/A
P.2.3.1	Safeguards against the entry of a foreign object		N/A
	Openings in transportable equipment		N/A

IEC 62368-1			
Clause	Requirement + Test	Result - Remark	Verdict
	Transportable equipment with metalized plastic parts ..... :		N/A
P.2.3.2	Openings in transportable equipment in relation to metallized parts of a barrier or enclosure (identification of supplementary safeguard) ..... :		N/A
P.3	Safeguards against spillage of internal liquids		N/A
P.3.1	General requirements		N/A
P.3.2	Determination of spillage consequences		N/A
P.3.3	Spillage safeguards		N/A
P.3.4	Safeguards effectiveness		N/A
P.4	Metallized coatings and adhesive securing parts		N/A
P.4.2 a)	Conditioning testing		N/A
	Tc (°C)..... :		—
	Tr (°C) ..... :		—
	Ta (°C) ..... :		—
P.4.2 b)	Abrasion testing ..... :	(See G.13.6.2)	N/A
P.4.2 c)	Mechanical strength testing ..... :	(See Annex T)	N/A
Q	**CIRCUITS INTENDED FOR INTERCONNECTION WITH BUILDING WIRING**		P
Q.1	Limited power sources	Unit not intended for interconnection with building wiring, however output was evaluated and complies with LPS and also PS2.	P
Q.1.1 a)	Inherently limited output		N/A
Q.1.1 b)	Impedance limited output		P
	- Regulating network limited output under normal operating and simulated single fault condition		P
Q.1.1 c)	Overcurrent protective device limited output		N/A
Q.1.1 d)	IC current limiter complying with G.9		N/A
Q.1.2	Compliance and test method	Refer to table Annex Q.1	P
Q.2	Test for external circuits – paired conductor cable		N/A
	Maximum output current (A) ..... :		—
	Current limiting method..... :		—
R	**LIMITED SHORT CIRCUIT TEST**		N/A
R.1	General requirements		N/A
R.2	Determination of the overcurrent protective device and circuit		N/A
R.3	Test method Supply voltage (V) and short-circuit current (A)). ..... :		N/A

IEC 62368-1			
Clause	Requirement + Test	Result - Remark	Verdict
S	**TESTS FOR RESISTANCE TO HEAT AND FIRE**		N/A
S.1	Flammability test for fire enclosures and fire barrier materials of equipment where the steady state power does not exceed 4 000 W	Certified materials used.	N/A
	Samples, material.....:		—
	Wall thickness (mm) .....:		—
	Conditioning (°C) .....:		—
	Test flame according to IEC 60695-11-5 with conditions as set out		N/A
	- Material not consumed completely		N/A
	- Material extinguishes within 30s		N/A
	- No burning of layer or wrapping tissue		N/A
S.2	Flammability test for fire enclosure and fire barrier integrity		N/A
	Samples, material.....:		—
	Wall thickness (mm) .....:		—
	Conditioning (°C) .....:		—
	Test flame according to IEC 60695-11-5 with conditions as set out		N/A
	Test specimen does not show any additional hole		N/A
S.3	Flammability test for the bottom of a fire enclosure		N/A
	Samples, material.....:		—
	Wall thickness (mm) .....:		—
	Cheesecloth did not ignite		N/A
S.4	Flammability classification of materials		N/A
S.5	Flammability test for fire enclosures and fire barrier materials of equipment where the steady state power does not exceed 4 000 W	Steady state power <4000W	N/A
	Samples, material.....:		—
	Wall thickness (mm) .....:		—
	Conditioning (test condition), (°C) .....:		—
	Test flame according to IEC 60695-11-20 with conditions as set out		N/A
	After every test specimen was not consumed completely		N/A
	After fifth flame application, flame extinguished within 1 min		N/A
T	**MECHANICAL STRENGTH TESTS**		P
T.1	General requirements		P
T.2	Steady force test, 10 N ..... :	(See appended table T.2)	P

IEC 62368-1			
Clause	Requirement + Test	Result - Remark	Verdict
T.3	Steady force test, 30 N .....:	(See appended table T3)	N/A
T.4	Steady force test, 100 N .....:	(See appended table T4)	P
T.5	Steady force test, 250 N .....:	(See appended table T5)	P
T.6	Enclosure impact test	(See appended table T6).	P
	Fall test		P
	Swing test		N/A
T.7	Drop test .....:	(See appended table T7)	P
T.8	Stress relief test .....:	(See appended table T8)	P
T.9	Impact Test (glass)		N/A
T.9.1	General requirements		N/A
T.9.2	Impact test and compliance		N/A
	Impact energy (J) .....:		—
	Height (m).....:		—
T.10	Glass fragmentation test.....:	(See sub-clause 4.4.4.9)	N/A
T.11	Test for telescoping or rod antennas		N/A
	Torque value (Nm) .....:		—
U	**MECHANICAL STRENGTH OF CATHODE RAY TUBES (CRT) AND PROTECTION AGAINST THE EFECTS OF IMPLOSION**		N/A
U.1	General requirements	No CRT used.	N/A
U.2	Compliance and test method for non-intrinsically protected CRTs		N/A
U.3	Protective Screen..... :	(See Annex T)	N/A
V	**DETERMINATION OF ACCESSIBLE PARTS (FINGERS, PROBES AND WEDGES)**		P
V.1	Accessible parts of equipment		P
V.2	Accessible part criterion		P

IEC 62368-1			
Clause	Requirement + Test	Result - Remark	Verdict

4.1.2	TABLE: List of critical components				P
Object / part No.	Manufacturer/ trademark	Type / model	Technical data	Standard	Mark(s) of conformity[1]
- Description[2)]	Unit from outside				
Enclosure	GlobTek	Overall dimensions: 80 mm by 50 mm by 31 mm; min. 2,0 mm thick. Top and bottom parts are mounted with ultrasonic welding process.		IEC/EN 62368-1	Checked with appliance.
Enclosure material	Sabic Japan L.L.C.	945 (GG)	Rated UL94 V-0 at min. 2,0 mm thick, RTI=130°C	IEC/EN 62368-1 (QMFZ2)	Checked with appliance. UR E207780
Enclosure material (alternative)	Sabic Inovative Plastics US L.L.C.	915R(GG)	Rated UL94 V-0 at min. 2,0 mm thick, RTI=130°C	IEC/EN 62368-1 (QMFZ2)	Accepted. UR E121562
Enclosure material (alternative)	LG Chem (Guangzhou) Engineering Plastics Co., Ltd.	Lupoy EF-1006(m)	Rated UL94 V-0 at min. 2,0 mm thick, RTI=125°C	IEC/EN 62368-1 (QMFZ8)	Accepted. UR E248280
Enclosure material (alternative)	Covestro Deutschland Ag.	FR6005 + (z)	Rated UL94 V-0 at min. 2,0 mm thick, RTI=125°C	IEC/EN 62368-1 (QMFZ2)	Accepted. UR E41613
Enclosure material (alternative)	Silver General Plastics (Dongguan) Co., Ltd.	PC2330	Rated UL94 V-0 at min. 2,0 mm thick, RTI=130°C	IEC/EN 62368-1 (QMFZ2)	Accepted. UR E225348
Appliance inlet - Class II	Tecx-Unions Technology Corp.	SO-222	2,5 A/250 Vac; min. 70°C Class II, C8	IEC/EN 60320-1 (AXUT2)	Checked with appliance. ENEC UR E220004
Appliance inlet - Class II (alternative)	Zhejiang Leci Electronics Co., Ltd.	DB-8	2,5 A/250 Vac; min. 70°C Class II, C8	IEC/EN 60320-1 (AXUT2)	Accepted. VDE UR E302229
Appliance inlet - Class II (alternative)	Zhe Jiang Bei Er Jia Electronic Co., Ltd.	ST-A03-005	2,5 A/250 Vac; min. 70°C Class II, C8	IEC/EN 60320-1 (AXUT2)	Accepted. VDE UR E225980
Appliance inlet - Class II (alternative)	Sun Fair Electric Wire & Cable (HK) Co., Ltd.	S-01	2,5 A/250 Vac; min. 70°C Class II, C8	IEC/EN 60320-1 (AXUT2)	Accepted. VDE UR E226643
Appliance inlet - Class I (C14 type)	Tecx-Unions Technology Corp.	TU-301-SP	10 A/250 Vac; min. 70°C C14	IEC/EN 60320-1 (AXUT2)	Checked with appliance. ENEC UR E220004

IEC 62368-1					
Clause	Requirement + Test		Result - Remark		Verdict
Appliance inlet - Class I (C14 type) (alternative)	Zhejiang Leci Electronics Co., Ltd.	DB-14	10 A/250 Vac; min. 70°C C14	IEC/EN 60320-1 (AXUT2)	Accepted. VDE UR E302229
Appliance inlet - Class I (C14 type) (alternative)	Echo Electric Co., Ltd.	AC-P01, AC-P03, AC-P06, AC-P07	10 A/250 Vac; min. 70°C C14	IEC/EN 60320-1 (AXUT2)	Accepted. VDE UR E101143
Appliance inlet - Class I (C14 type) (alternative)	Zhe Jiang Bei Er Jia Electronic Co., Ltd.	ST-A01-003JT	10 A/250 Vac; min. 70°C C14	IEC/EN 60320-1 (AXUT2)	Accepted. VDE UR E225980
Appliance inlet - Class I (C14 type) (alternative)	Sun Fair Electric Wire & Cable (HK) Co., Ltd.	S-03	10 A/250 Vac; min. 70°C C14	IEC/EN 60320-1 (AXUT2)	Accepted. VDE UR E226643
Appliance inlet - Class I (C6 type)	Tecx-Unions Technology Corp.	TU-333	2,5 A/250 Vac; min. 70°C C6	IEC/EN 60320-1 (AXUT2)	Checked with appliance. ENEC UR E220004
Appliance inlet - Class I (C6 type) (alternative)	Zhejiang Leci Electronics Co., Ltd.	DB-6	2,5 A/250 Vac; min. 70°C C6	IEC/EN 60320-1 (AXUT2)	Accepted. VDE UR E302229
Appliance inlet - Class I (C6 type) (alternative)	Zhe Jiang Bei Er Jia Electronic Co., Ltd.	ST-A04-001, ST-A04-002	2,5 A/250 Vac; min. 70°C C6	IEC/EN 60320-1 (AXUT2)	Accepted. VDE UR E225980
Appliance inlet - Class I (C6 type) (alternative)	Sun Fair Electric Wire & Cable (HK) Co., Ltd.	S-02	2,5 A/250 Vac; min. 70°C C6	IEC/EN 60320-1 (AXUT2)	Accepted. VDE UR E226643
Output lead	+ Jhi Wei Electric Wire & Cable Co., Ltd.	Style 2468	16AWG; VW-1; 80°C; 300 V	IEC/EN 62368-1 (AVLV2)	Accepted. UR E157717
Output lead (alternative)	Interchangeable	Interchangeable	min. 16AWG; min. VW-1; min. 80°C; min. 300 V	IEC/EN 62368-1 (AVLV2)	Accepted. UR
- Description[2)]	Unit from inside				
Internal PE wiring (Class I)	+ Jhi Wei Electric Wire & Cable Co., Ltd.	1015	600 Vac; AWG18; 105°C; VW-1	IEC/EN 60950-1 (AVLV2)	Checked with appliance. UR E157717
Internal PE wiring (Class I) (alternative)	Interchangeable	Interchangeable	600 Vac; AWG18; 105°C; VW-1	IEC/EN 60950-1 (AVLV2)	Accepted. UR

IEC 62368-1					
Clause	Requirement + Test		Result - Remark		Verdict
Heat-Shrinkable Tube (used on earthing wire)	Changyuan Electronics Group Co., Ltd.	CB-HFT	VW-1; min. 300 V; min. 125°C	IEC/EN 60950-1 (YDPU2)	Checked with appliance. UR 180908
Printed Circuit Board – PCB	Cheerful Plastic Electronic Products	03A	UL94 V-0 min. 130°C Dimensions: approx. 70 mm by 44 mm min. thickness: 1,2 mm	IEC/EN 62368-1 (ZPMV2)	Checked with appliance. UR E199724
Printed Circuit Board – PCB (alternative)	Interchangeable	Interchangeable	min. UL94 V-1 min. 130°C Dimensions: approx. 70 mm by 44 mm min. thickness: 1,2 mm	IEC/EN 62368-1 (ZPMV2)	Accepted. UR
Fuse F1	Suzhou Walter Electronic Co., Ltd.	2010	T2.0AL; 250 Vac	IEC/EN 60127-3 (JDYX2)	VDE UR E56092
Fuse F1 (alternative)	Conquer Electronics Co., Ltd.	MST	T2.0AL; 250 Vac	IEC/EN 60127-3 (JDYX2)	VDE UR E82636
Fuse F1 (alternative)	Hollyland Co., Ltd.	5ET	T2.0AL; 250 Vac	IEC/EN 60127-3 (JDYX2)	VDE UR E156471
Fuse F1 (alternative)	Cooper Bussmann LLC	SS-5	T2.0AL; 250 Vac	IEC/EN 60127-3 (JDYX2)	VDE UR E19180
Fuse F1 (alternative)	Bel Fuse Ltd.	RST	T2.0AL; 250 Vac	IEC/EN 60127-3 (JDYX2)	VDE UR E20624
X-Capacitor CX1 - optional	Ultra Tech Xiphi Enterprise Co., Ltd.	HQX	Rated max. 0,22 µF ±20%; min 250 Vac, min. 100°C, X1 or X2 type	IEC/EN 60384-14 (FOWX2)	Checked with appliance. VDE UR E183780
X-Capacitor CX1 – optional (alternative)	Tenta Electric Industrial Co., Ltd.	MEX	Rated max. 0,22 µF ±20%; min 250 Vac, min. 100°C, X1 or X2 type	IEC/EN 60384-14 (FOWX2)	VDE UR E222911
X-Capacitor CX1 – optional (alternative)	Cheng Tung Industrial Co., Ltd.	CTX	Rated max. 0,22 µF ±20%; min 250 Vac, min. 100°C, X1 or X2 type	IEC/EN 60384-14 (FOWX2)	VDE UR E193049

IEC 62368-1			
Clause	Requirement + Test	Result - Remark	Verdict

X-Capacitor CX1 – optional (alternative)	Joey Electronics (Dong Guan) Co., Ltd.	MPX	Rated max. 0,22 µF ±20%; min 250 Vac, min. 100°C, X1 or X2 type	IEC/EN 60384-14 (FOWX2)	VDE UR E216807
X-Capacitor CX1 – optional (alternative)	Xiangtai Electronic (Shenzhen) Co., Ltd.	MPX/MKP	Rated max. 0,22 µF ±20%; min 250 Vac, min. 100°C, X1 or X2 type	IEC/EN 60384-14 (FOWX2)	VDE UR E319473
X-Capacitor CX1 – optional (alternative)	Carli Electronics Co., Ltd.	MPX	Rated max. 0,22 µF ±20%; min 250 Vac, min. 100°C, X1 or X2 type	IEC/EN 60384-14 (FOWX2)	VDE UR E120045
Bleeder resistors R1, R2	Tzai Yuan Enterprise Co., Ltd.	HSMD, SMD	Each rated max 2.0 MΩ, min 1/4W	IEC/EN 62368-1 (AZOP2)	Checked with appliance. UR E354677
Bleeder resistors R1, R2 (alternative)	Prosperity dielectrics Co., Ltd.	FVS06, TF12V, FVS20, TF20V, FVS25, TF25V,	Each rated max 2.0 MΩ, min 1/4W	IEC/EN 62368-1 (AZOT2)	Accepted. UR E358325
Bleeder resistors R1, R2 (alternative)	Yageo Corporation	RV1206	Each rated max 2.0 MΩ, min 1/4W	IEC/EN 62368-1	Approved by CB (UL).
Bridge rectifier DB1	Interchangeable	Interchangeable	Min. 2 A, min. 600 V	IEC/EN 62368-1	Checked with appliance.
Electrolytic capacitor C1	Interchangeable	Interchangeable	Max. 47 µF, min. 400 V, 105°C	IEC/EN 62368-1	Checked with appliance.
Transistor MOSFET Q1	Interchangeable	Interchangeable	Min. 4 A, min. 600 V	IEC/EN 62368-1	Checked with appliance.
Current sense resistor R10	Interchangeable	Interchangeable	Min. 0,91 Ohm, min. 1 W	IEC/EN 62368-1	Checked with appliance.
Choke NF1 - optional	Interchangeable	Interchangeable	130°C	IEC/EN 62368-1	Checked with appliance.
-- coil	Interchangeable	Interchangeable	130°C	IEC/EN 62368-1 UL1446	Checked with appliance. UL
-- bobbin	Sumitomo Bakelite Co., Ltd.	PM-9820	Phenolic, UL94 V-0, 150°C	IEC/EN 62368-1 (QMFZ2)	Checked in appliance. UR E41429

IEC 62368-1					
Clause	Requirement + Test		Result - Remark		Verdict
-- bobbin (alternative)	Chang Chun Plastics Co., Ltd.	T375J, T375HF	Phenolic, UL94 V-0, 150°C	IEC/EN 62368-1 (QMFZ2)	Accepted UR E59481
-- bobbin (alternative)	Interchangeable	Interchangeable	Phenolic, UL94 V-0, 150°C	IEC/EN 62368-1 (QMFZ2)	Accepted UR
-- Insulation tape	3M Company Electrical Markets Div. (EMD)	1350F-1 (b), 1350T-1 (b)	130°C	IEC/EN 62368-1 (OANZ2)	Checked in appliance. UR E17385
-- Insulation tap (alternative)	Bondtec Pacific Co., Ltd.	370S (b)	130°C	IEC/EN 62368-1 (OANZ2)	Accepted. UR E175868
-- Insulation tap (alternative)	Interchangeable	Interchangeable	130°C	IEC/EN 62368-1 (OANZ2)	Accepted. UR
Bridge capacitors CY1, CY2 - optional	Success Electronics Co., Ltd.	SB, SE, SF, SL	CY1=max. 1000 pF, CY2=max. 100 pF, min. 250 Vac, 125°C, Y1 type	IEC60384-14 (FOWX2)	VDE UR E114280
Bridge capacitors CY1, CY2 – optional (alternative)	Walsin Technology Corp.	AH	CY1=max. 1000 pF, CY2=max. 100 pF, min. 250 Vac, 125°C, Y1 type	IEC60384-14 (FOWX2)	VDE UR E146544
Bridge capacitors CY1, CY2 – optional (alternative)	TDK Corporation	CD	CY1=max. 1000 pF, CY2=max. 100 pF, min. 250 Vac, 125°C, Y1 type	IEC60384-14 (FOWX2)	VDE UR E37861
Bridge capacitors CY1, CY2 – optional (alternative)	Juhong Ele Company	JB	CY1=max. 1000 pF, CY2=max. 100 pF, min. 250 Vac, 125°C, Y1 type	IEC60384-14 (FOWX2)	ENEC UR E253194
Bridge capacitors CY1, CY2 – optional (alternative)	Murata Mfg. Co., Ltd.	KX	CY1=max. 1000 pF, CY2=max. 100 pF, min. 250 Vac, 125°C, Y1 type	IEC60384-14 (FOWX2)	VDE UR E37921
Bridge capacitors CY1, CY2 – optional (alternative)	Xiangtai Electronic (Shenzhen) Co., ltd.	YO series	CY1=max. 1000 pF, CY2=max. 100 pF, min. 250 Vac, 125°C, Y1 type	IEC60384-14 (FOWX2)	VDE UR E319473
Bridge capacitors CY1, CY2 – optional (alternative)	Haohua Electronic Co.	CT7	CY1=max. 1000 pF, CY2=max. 100 pF, min. 250 Vac, 125°C, Y1 type	IEC60384-14 (FOWX2)	VDE UR E233106

IEC 62368-1			
Clause	Requirement + Test	Result - Remark	Verdict

Optocoupler PC1	Cosmo Electronics Corp.	KPC817, K1010	Reinforced insulation. Ext. dist. ≥ 5,0 mm; DTI: ≥ 0,4 mm; min. 100°C; thermal cycling test.	IEC/EN 62368-1 IEC/EN 60747-5-5 (FPQU2)	VDE UR E169586
Optocoupler PC1 (alternative)	Everlight Electronics Co., Ltd.	EL817	Reinforced insulation. Ext. dist. ≥ 5,0 mm; DTI: ≥ 0,4 mm; min. 100°C; thermal cycling test.	IEC/EN 62368-1 IEC/EN 60747-5-5 (FPQU2)	VDE UR E217129
Optocoupler PC1 (alternative)	Bright Led Electronics Corp.	BPC-817 A/B/C/D/L, BPC-817 S, BPC-817 M	Reinforced insulation. Ext. dist. ≥ 5,0 mm; DTI: ≥ 0,4 mm; min. 100°C; thermal cycling test.	IEC/EN 62368-1 IEC/EN 60747-5-5 (FPQU2)	VDE UR E236324
Optocoupler PC1 (alternative)	Shenzhen Orient Components Co., Ltd.	ORPC-817M x, ORPC-817S x, ORPC-817 x	Reinforced insulation. Ext. dist. ≥ 5,0 mm; DTI: ≥ 0,4 mm; min. 100°C; thermal cycling test.	IEC/EN 62368-1 IEC/EN 60747-5-5 (FPQU2)	VDE UR E323844
Optocoupler PC1 (alternative)	Lite-On Technology Corp.	LTV-817	Reinforced insulation. Ext. dist. ≥ 5,0 mm; DTI: ≥ 0,4 mm; min. 100°C; thermal cycling test.	IEC/EN 62368-1 IEC/EN 60747-5-5 (FPQU2)	VDE UR E113898
Optocoupler PC1 (alternative)	Renesas Electronics Corporation	PS2561-1	Reinforced insulation. Ext. dist. ≥ 5,0 mm; DTI: ≥ 0,4 mm; min. 100°C; thermal cycling test.	IEC/EN 62368-1 IEC/EN 60747-5-5 (FPQU2)	VDE UR E72422
Transformer T1	ENG Electric Co., Ltd	XF00916	Class B	IEC/EN 62368-1	Checked in appliance.
Transformer T1 (alternative)	GlobTek/HAOPUWEI/BOAM	XF00916	Class B	IEC/EN 62368-1	Checked in appliance.
-- Insulation system	ENG Electric Co., Ltd	ENG130-1	Class B	IEC/EN 62368-1 (OBJY2)	Accepted. UR E308897

IEC 62368-1					
Clause	Requirement + Test		Result - Remark		Verdict
-- Insulation system (alternative)	GlobTek	GTX-130-TM	Class B	IEC/EN 62368-1 (OBJY2)	Accepted. UR E243347
-- Insulation system (alternative)	HAOPUWEI	ZT-130	Class B	IEC/EN 62368-1 (OBJY2)	Accepted. UR E315275
-- Insulation system (alternative)	BOAM	BOAM-01, B1	Class B	IEC/EN 62368-1 (OBJY2)	Accepted. UR E252329
-- Magnet wire	Interchangeable	Interchangeable	130°C	IEC/EN 62368-1 UL 1446	Accepted. UR
-- Bobbin	Sumitomo Bakelite Co., Ltd.	PM-9820	Phenolic, UL94 V-0; min. 150°C; min. thickness 0,71 mm	IEC/EN 62368-1 (QMFZ2)	Checked with appliance. UR E41429
-- Bobbin (alternative)	Chang Chun Plastics Co., Ltd.	T375J, T375HF	Phenolic, UL94 V-0; min. 150°C; min. thickness 0,71 mm	IEC/EN 62368-1 (QMFZ2)	Checked with appliance. UR E59481
-- bobbin (alternative)	Chang Chun Plastics Co., Ltd.	4130	Phenolic, UL94 V-0, 140°C	IEC/EN 62368-1 (QMFZ2)	Accepted UR E59481
-- bobbin (alternative)	HITACHI CHEMICAL Co., Ltd.	CP-J-8800	Phenolic, UL94 V-0, 150°C	IEC/EN 62368-1 (QMFZ2)	Accepted UR E42956
Triple Insulated wire (TIW)	Great Leoflon Industrial Co., Ltd.	TRW(B) Serie(s)	Triple insulated winding wire rated for class B (130°C).	IEC/EN 62368-1 (OBJT2)	Checked with appliance UR E211989
Triple Insulated wire (TIW) (alternative)	COSMOLINK CO. Ltd.	TIW-M	Triple insulated winding wire rated for class B (130°C).	IEC/EN 62368-1 (OBJT2)	Checked with appliance UR E213764
Triple Insulated wire (TIW) (alternative)	Furukawa Electric Co., Ltd.	TEX-E	Triple insulated winding wire rated for class B (130°C).	IEC/EN 62368-1 (OBJT2)	Checked with appliance UR E206440
Triple Insulated wire (TIW) (alternative)	TOTOKU ELECTRIC CO., LTD.	TIW-2	Triple insulated winding wire rated for class B (130°C).	IEC/EN 62368-1 (OBJT2)	Checked with appliance UR E166483
Triple Insulated wire (TIW) (alternative)	E&B TECHNOLOGY CO., LTD.	E&B-XXXB, E&B-XXXB-1	Triple insulated winding wire rated for class B (130°C).	IEC/EN 62368-1 (OBJT2)	Checked with appliance UR E315265

IEC 62368-1			
Clause	Requirement + Test	Result - Remark	Verdict

Triple Insulated wire (TIW) (alternative)	SHENZHEN JIUDING NEW MATERIAL CO LTD	DTFW-B	Triple insulated winding wire rated for class B (130°C).	IEC/EN 62368-1 (OBJT2)	Checked with appliance UR E357999
-- Insulation tape	3M Company Electrical Markets Div (Emd)	1350F-1 (b); 1350T-1 (b); 44	Class B; min. 130°C	IEC/EN 62368-1 (OANZ2)	Checked with appliance. UR E17385
-- Insulation tape (alternative)	Bondtec Pacific Co., ltd.	370S (b)	Class B; min. 130°C	IEC/EN 62368-1 (OANZ2)	Checked with appliance. UR E175868
-- Insulation tape (alternative)	JINGJIANG YAHUA PRESSURE SENSITIVE GLUE CO., LTD.	PZ; CT; WF	Class B; min. 130°C	IEC/EN 62368-1 (OANZ2)	Checked with appliance. UR E165111
-- Insulation tape (alternative)	JINGJIANG JINGYI ADHESIVE PRODUCT CO., LTD.	JY25-A	Class B; min. 130°C	IEC/EN 62368-1 (OANZ2)	Checked with appliance. UR E246950
-- Insulation tape (alternative)	CHANGYUAN ELECTRONICS GROUP CO., LTD.	CB-TT-T, CB-TT-S	Class B; min. 130°C	IEC/EN 62368-1 (OANZ2)	Checked with appliance. UR E180908
-- Varnish	Elantas Electrical Insulation Elantas Pdg Inc.	V1630FS	Min. 130°C	IEC/EN 62368-1 (OBOR2)	Checked with appliance. UR E75225
-- Tube	Great Holding Industrial Co., ltd.	TFL, TFS, TFT	200°C, VW-1	IEC/EN 62368-1 (YDPU2)	Checked with appliance. UR E156256
-- Tube (alternative)	Great Holding Industrial Co., ltd.	WF	200°C, VW-1	IEC/EN 62368-1 (YDPU2)	Checked with appliance. UR E203950
-- Tube (alternative)	Great Holding Industrial Co., ltd.	CB-TT-T, CB-TT-S	200°C, VW-1	IEC/EN 62368-1 (YDPU2)	Checked with appliance. UR E180908
Glue	Interchangeable	Interchangeable	Min. UL94 V-2	IEC/EN 62368-1 UL94, UL746C	Accepted. UR
Output cord (alternative) (Cannot remove it – standard requires VW-1)	Jhi Wei Electric Wire & Cable Co., Ltd.	Style 2468	Min 24AWG; min. 80°C; min. 300 V, min. VW-1	IEC/EN 62368-1 (AVLV2)	Checked with appliance. UR E157717

IEC 62368-1					
Clause	Requirement + Test		Result - Remark		Verdict
Output cord (alternative) (Cannot remove it – standard requires VW-1)	Interchangeable	Interchangeable	Min 24AWG; min. 80°C; min. 300 V, min. VW-1	IEC/EN 62368-1 (AVLV2)	Accepted. UR
Supplementary information: 1) Provided evidence ensures the agreed level of compliance. See OD-CB2039. 2) Description line content is optional. Main line description needs to clearly detail the component used for testing					

IEC 62368-1			
Clause	Requirement + Test	Result - Remark	Verdict

4.8.4, 4.8.5	**TABLE: Lithium coin/button cell batteries mechanical tests**		N/A
(The following mechanical tests are conducted in the sequence noted.)			
4.8.4.2	**TABLE: Stress Relief test**		—
Part	**Material**	**Oven Temperature (°C)**	**Comments**
4.8.4.3	**TABLE: Battery replacement test**		—
Battery part no.....:			—
Battery Installation/withdrawal		Battery Installation/Removal Cycle	Comments
		1	
		2	
		3	
		4	
		5	
		6	
		8	
		9	
		10	
4.8.4.4	**TABLE: Drop test**		—
Impact Area	Drop Distance	Drop No.	Observations
		1	
		2	
		3	
4.8.4.5	**TABLE: Impact**		—
Impacts per surface	**Surface tested**	**Impact energy (Nm)**	**Comments**
4.8.4.6	**TABLE: Crush test**		—
Test position	**Surface tested**	**Crushing Force (N)**	**Duration force applied (s)**
Supplementary information:			

IEC 62368-1			
Clause	Requirement + Test	Result - Remark	Verdict

4.8.5	TABLE: Lithium coin/button cell batteries mechanical test result		N/A
Test position	**Surface tested**	**Force (N)**	**Duration force applied (s)**
Supplementary information:			

5.2	Table: Classification of electrical energy sources – GT-46200-1806-0.05-T3 (5,95 V output; Class I)						P
5.2.2.2 – Steady State Voltage and Current conditions							
No.	Supply Voltage	Location (e.g. circuit designation)	Test conditions	Parameters			ES Class
				U (Vrms or Vpk)	I (Apk or Arms)	Hz	
1	100-240 V, 50-60 Hz	Output connector (+ to -) (prospective touch voltage)	Normal	6,18	/	DC	ES1
			Abnormal	/	/	/	
			Single fault –SC	0 V	0 A	/	
2	264 V, 60 Hz	Output connector (+ to PE / – to PE) Fig 4 used (touch current)	Normal	/	**	/	ES1
			Abnormal	/	/	/	
			Single fault – SC/OC	/	/	/	
Supplementary information: a.c. mains considered ES3. ** PE connected with output -. Test is N/A. Switching frequency: 68,4 kHz							

IEC 62368-1			
Clause	Requirement + Test	Result - Remark	Verdict

5.2	**Table: Classification of electrical energy sources – GT-46200-1806-0.05-T2 (5,95 V output; Class II)**	P

5.2.2.2 – Steady State Voltage and Current conditions

No.	Supply Voltage	Location (e.g. circuit designation)	Test conditions	Parameters			ES Class
				U (Vrms or Vpk)	I (Apk or Arms)	Hz	
1	100-240 V, 50-60 Hz	Output connector (+ to -) (prospective touch voltage)	Normal	5,15	/	DC	ES1
			Abnormal	/	/	/	
			Single fault –SC	0 V	0 A	/	
2	264 V, 60 Hz	Output connector (+ to PE / – to PE) Fig 4 used (touch current)	Normal	/	max. 0,172mApk/0,120mArms **	/	ES1
			Abnormal	/	/	/	
			Single fault – SC/OC	/	/	/	

Supplementary information:
a.c. mains considered ES3.
Switching frequency: 68,4 kHz
** Test repeated at SIQ Ljubljana.

IEC 62368-1			
Clause	Requirement + Test	Result - Remark	Verdict

5.2.2.3 - Capacitance Limits						
No.	Supply Voltage	Location (e.g. circuit designation)	Test conditions	Parameters		ES Class
				Capacitance, nF	Upk (V)	
1	240	X capacitor C1	Normal	CX1: 220µF + 20% tolerances = 264	340	ES3
			Abnormal			
			Single fault – SC/OC			

5.2.2.4 - Single Pulses							
No.	Supply Voltage	Location (e.g. circuit designation)	Test conditions	Parameters			ES Class
				Duration (ms)	Upk (V)	Ipk (mA)	
			Normal				
			Abnormal				
			Single fault – SC/OC				

5.2.2.5 - Repetitive Pulses							
No.	Supply Voltage	Location (e.g. circuit designation)	Test conditions	Parameters			ES Class
				Off time (ms)	Upk (V)	Ipk (mA)	
			Normal				
			Abnormal				
			Single fault – SC/OC				

Test Conditions:

Normal –

Abnormal -

Supplementary information: SC=Short Circuit, OC=Short Circuit

IEC 62368-1			
Clause	Requirement + Test	Result - Remark	Verdict

5.4.1.4, 6.3.2, 9.0, B.2.6	**TABLE: Temperature measurements (model → output 5 Vdc; 4 A; Class I)**					P
	Supply voltage (V) .....:	See below	See below	See below	See below	—
	Ambient T_{min} (°C) .....:	--	--	--	--	—
	Ambient T_{max} (°C) .....:	See below	See below	See below	See below	—
	Tma (°C) .....:	--	--	--	--	—
Maximum measured temperature T of part/at:		T (°C)				Allowed T_{max} (°C)
Input voltage and position		90 V / label down	90 V / label down	90 V / label up	90 V / label up	
1. AC inlet		37,2	52,8	37,3	52,9	70
2. Earth wire		75,1	90,7	74,4	90,0	105
3. CX1		54,9	70,5	56,0	71,6	100
4. NF1 core		75,6	91,2	74,4	90,0	120
5. NF1 coil		79,2	94,8	78,2	93,8	120
6. PCB under DB1		81,9	97,5	81,5	97,1	130
7. C1		79,6	95,2	79,6	95,2	105
8. PCB under Q1		81,2	96,8	81,1	96,7	130
9. PC1		67,6	83,2	70,6	86,2	100
10. T1 coil		91,4	107,0	91,4	107,0	110
11. T1 core		88,3	103,9	89,4	105,0	110
12. CY1		81,7	102,7	86,3	101,9	125
13. PCB under Q2		98,8	114,4	97,4	113,0	130
14. C8		86,9	102,5	85,6	101,2	105
15. Output wire		62,4	78,0	61,5	77,1	80
16. Enclosure inside near T1 top		77,9	93,5	80,2	95,8	105
17. Enclosure inside near T1 bottom		77,3	92,9	72,3	87,9	105
20 Ambient		24,4	Shift to 40,0	24,4	Shift to 40,0	--
18. Enclosure inside near T1 top		60,1	60,7	65,6	66,2	77
19. Enclosure inside near T1 bottom		69,2	69,8	62,4	63,0	77
20. Ambient		24,4	Shift to 25,0	24,4	Shift to 25,0	--

Supplementary information:
Note 1: Tma should be considered as directed by appliable requirement
Note 2: Tma is not included in assessment of Touch Temperatures (Clause 9)
Note 3: The maximum ambient temperature specified by manufacturer is 40°C.

IEC 62368-1			
Clause	Requirement + Test	Result - Remark	Verdict

5.4.1.4, 6.3.2, 9.0, B.2.6	**TABLE: Temperature measurements (model → output 5,95 Vdc; 3 A; Class I)**					P
	Supply voltage (V) .....:	See below	See below	See below	See below	—
	Ambient T_{min} (°C) .....:	--	--	--	--	—
	Ambient T_{max} (°C) .....:	See below	See below	See below	See below	—
	Tma (°C) .....:	--	--	--	--	—
Maximum measured temperature T of part/at:		T (°C)				Allowed T_{max} (°C)
Input voltage and position		90 V / label down	90 V / label down	90 V / label up	90 V / label up	
1. AC inlet		36,0	51,5	36,2	51,8	70
2. Earth wire		65,8	81,3	66,7	82,3	105
3. CX1		50,4	65,9	51,2	66,8	100
4. NF1 core		66,8	82,3	67,1	82,7	120
5. NF1 coil		69,6	85,1	70,0	85,6	120
6. PCB under DB1		73,9	89,4	74,2	89,8	130
7. C1		71,4	86,9	71,2	86,8	105
8. PCB under Q1		73,8	89,3	72,3	87,9	130
9. PC1		55,4	70,9	57,5	73,1	100
10. T1 coil		77,9	93,4	78,7	94,3	110
11. T1 core		75,7	91,2	76,8	92,4	110
12. CY1		67,2	82,7	68,9	84,5	125
13. PCB under Q2		67,2	82,7	69,4	85,0	130
14. C8		61,2	76,7	63,6	79,2	105
15. Output wire		49,8	65,3	50,9	66,5	80
16. Enclosure inside near T1 top		59,3	74,8	62,1	77,7	105
17. Enclosure inside near T1 bottom		54,9	70,4	52,9	68,5	105
20 Ambient		24,5	Sfift to 40,0	24,4	Sfift to 40,0	--
18. Enclosure inside near T1 top		51,0	51,5	54,2	54,8	77
19. Enclosure inside near T1 bottom		50,0	50,5	47,2	47,8	77
20. Ambient		24,5	Shift to 25,0	24,4	Shift to 25,0	--

Supplementary information:
Note 1: Tma should be considered as directed by appliable requirement
Note 2: Tma is not included in assessment of Touch Temperatures (Clause 9)
Note 3: The maximum ambient temperature specified by manufacturer is 40°C.

IEC 62368-1			
Clause	Requirement + Test	Result - Remark	Verdict

5.4.1.4, 6.3.2, 9.0, B.2.6	**TABLE: Temperature measurements (model → output 5 Vdc; 4 A; Class I)**					P
	Supply voltage (V) .....:	See below	See below	See below	See below	—
	Ambient T_{min} (°C) .....:	--	--	--	--	—
	Ambient T_{max} (°C) .....:	See below	See below	See below	See below	—
	Tma (°C) .....:	--	--	--	--	—
Maximum measured temperature T of part/at:		T (°C)				Allowed T_{max} (°C)
Input voltage and position		264 V / label down	264 V / label down	264 V / label up	264 V / label up	
1. AC inlet		33,8	49,2	35,0	50,4	70
2. Earth wire		68,9	84,3	68,7	84,1	105
3. CX1		45,3	60,7	46,4	61,8	100
4. NF1 core		57,2	72,6	57,3	72,7	120
5. NF1 coil		60,3	75,7	60,5	75,9	120
6. PCB under DB1		65,5	80,9	65,9	81,3	130
7. C1		69,3	84,7	69,7	85,1	105
8. PCB under Q1		73,8	89,2	74,0	89,4	130
9. PC1		63,4	78,8	65,6	81,0	100
10. T1 coil		84,2	99,6	84,4	99,8	110
11. T1 core		82,4	97,8	83,3	98,7	110
12. CY1		77,9	93,3	77,9	93,3	125
13. PCB under Q2		90,9	106,3	90,3	105,7	130
14. C8		81,9	97,3	81,3	96,7	105
15. Output wire		60,8	76,2	60,1	75,5	80
16. Enclosure inside near T1 top		73,0	88,4	74,8	90,2	105
17. Enclosure inside near T1 bottom		70,0	85,4	66,0	81,4	105
20 Ambient		24,6	Shift to 40,0	24,6	Shift to 40,0	--
18. Enclosure inside near T1 top		56,9	57,3	60,1	60,5	77
19. Enclosure inside near T1 bottom		62,1	62,5	56,9	57,3	77
20. Ambient		24,6	Shift to 25,0	24,6	Shift to 25,0	--

Supplementary information:
Note 1: Tma should be considered as directed by appliable requirement
Note 2: Tma is not included in assessment of Touch Temperatures (Clause 9)
Note 3: The maximum ambient temperature specified by manufacturer is 40°C.

IEC 62368-1			
Clause	Requirement + Test	Result - Remark	Verdict

5.4.1.4, 6.3.2, 9.0, B.2.6	**TABLE: Temperature measurements (model → output 5,95 Vdc; 3 A; Class I)**					P
	Supply voltage (V) .....:	See below	See below	See below	See below	—
	Ambient T_{min} (°C) .....:	--	--	--	--	—
	Ambient T_{max} (°C) .....:	See below	See below	See below	See below	—
	Tma (°C) .....:	--	--	--	--	—
Maximum measured temperature T of part/at:		T (°C)				Allowed T_{max} (°C)
Input voltage and position		264 V / label down	264 V / label down	264 V / label up	264 V / label up	
1. AC inlet		33,9	49,3	34,3	49,8	70
2. Earth wire		63,1	78,5	63,1	78,6	105
3. CX1		42,8	58,2	43,6	59,1	100
4. NF1 core		52,8	68,2	53,4	68,9	120
5. NF1 coil		53,4	68,8	53,9	69,4	120
6. PCB under DB1		58,6	74,0	59,0	74,5	130
7. C1		62,0	77,4	61,9	77,4	105
8. PCB under Q1		66,6	82,0	66,0	81,5	130
9. PC1		53,5	68,9	55,0	70,5	100
10. T1 coil		74,0	89,4	74,2	89,7	110
11. T1 core		71,7	87,1	71,7	87,2	110
12. CY1		63,1	78,5	63,9	79,4	125
13. PCB under Q2		64,2	79,6	64,8	80,3	130
14. C8		59,2	74,6	59,9	75,4	105
15. Output wire		49,2	64,6	49,4	64,9	80
16. Enclosure inside near T1 top		58,6	74,0	59,7	75,2	105
17. Enclosure inside near T1 bottom		52,2	67,6	50,5	66,0	105
20 Ambient		24,6	Sfift to 40,0	24,5	Sfift to 40,0	--
18. Enclosure inside near T1 top		50,9	51,3	52,0	52,5	77
19. Enclosure inside near T1 bottom		47,6	48,0	45,5	46,0	77
20. Ambient		24,6	Shift to 25,0	24,5	Shift to 25,0	--

Supplementary information:
Note 1: Tma should be considered as directed by appliable requirement
Note 2: Tma is not included in assessment of Touch Temperatures (Clause 9)
Note 3: The maximum ambient temperature specified by manufacturer is 40°C.

IEC 62368-1			
Clause	Requirement + Test	Result - Remark	Verdict

5.4.1.4, 6.3.2, 9.0, B.2.6	**TABLE: Temperature measurements (model → output 5 Vdc; 4 A; Class II)**					P
	Supply voltage (V) .....:	See below	See below	See below	See below	—
	Ambient T_{min} (°C) .....:	--	--	--	--	—
	Ambient T_{max} (°C) .....:	See below	See below	See below	See below	—
	Tma (°C) .....:	--	--	--	--	—
Maximum measured temperature T of part/at:		T (°C)				Allowed T_{max} (°C)
Input voltage and position		90 V / label down	90 V / label down	90 V / label up	90 V / label up	
1. AC inlet		32,7	52,8	37,3	52,9	70
2. CX1		54,9	70,5	56,0	71,6	100
3. NF1 core		75,6	91,2	74,4	90,0	120
4. NF1 coil		79,2	94,8	78,2	93,8	120
5. PCB under DB1		81,9	97,5	81,5	97,1	130
6. C1		79,6	95,2	79,6	95,2	105
7. PCB under Q1		81,2	96,8	81,1	96,7	130
8. PC1		67,6	83,2	70,6	86,2	100
9. T1 coil		91,4	107,0	91,4	107,0	110
10. T1 core		88,3	103,9	89,4	105,0	110
11. CY1		81,7	102,7	86,3	101,9	125
12. PCB under Q2		98,8	114,4	97,4	113,0	130
13. C8		86,9	102,5	85,6	101,2	105
14. Output wire		62,4	78,0	61,5	77,1	80
15. Enclosure inside near T1 top		77,9	93,5	80,2	95,8	105
16. Enclosure inside near T1 bottom		77,3	92,9	72,3	87,9	105
19 Ambient		24,4	Shift to 40,0	24,4	Shift to 40,0	--
17. Enclosure inside near T1 top		60,1	60,7	65,6	66,2	77
18. Enclosure inside near T1 bottom		69,2	69,8	62,4	63,0	77
19. Ambient		24,4	Shift to 25,0	24,4	Shift to 25,0	--

Supplementary information:
Note 1: Tma should be considered as directed by appliable requirement
Note 2: Tma is not included in assessment of Touch Temperatures (Clause 9)
Note 3: The maximum ambient temperature specified by manufacturer is 40°C.

IEC 62368-1			
Clause	Requirement + Test	Result - Remark	Verdict

5.4.1.4, 6.3.2, 9.0, B.2.6	**TABLE: Temperature measurements (model → output 5,95 Vdc; 3 A; Class II)**					P
	Supply voltage (V) .....:	See below	See below	See below	See below	—
	Ambient T_{min} (°C) .....:	--	--	--	--	—
	Ambient T_{max} (°C) .....:	See below	See below	See below	See below	—
	Tma (°C) .....:	--	--	--	--	—
Maximum measured temperature T of part/at:		T (°C)				Allowed T_{max} (°C)
Input voltage and position		90 V / label down	90 V / label down	90 V / label up	90 V / label up	
1. AC inlet		36,0	51,5	36,2	51,8	70
2. CX1		50,4	65,9	51,2	66,8	100
3. NF1 core		66,8	82,3	67,1	82,7	120
4. NF1 coil		69,6	85,1	70,0	85,6	120
5. PCB under DB1		73,9	89,4	74,2	89,8	130
6. C1		71,4	86,9	71,2	86,8	105
7. PCB under Q1		73,8	89,3	72,3	87,9	130
8. PC1		55,4	70,9	57,5	73,1	100
9. T1 coil		77,9	93,4	78,7	94,3	110
10. T1 core		75,7	91,2	76,8	92,4	110
11. CY1		67,2	82,7	68,9	84,5	125
12. PCB under Q2		67,2	82,7	69,4	85,0	130
13. C8		61,2	76,7	63,6	79,2	105
14. Output wire		49,8	65,3	50,9	66,5	80
15. Enclosure inside near T1 top		59,3	74,8	62,1	77,7	105
16. Enclosure inside near T1 bottom		54,9	70,4	52,9	68,5	105
19 Ambient		24,5	Sfift to 40,0	24,4	Sfift to 40,0	--
17. Enclosure inside near T1 top		51,0	51,5	54,2	54,8	77
18. Enclosure inside near T1 bottom		50,0	50,5	47,2	47,8	77
19. Ambient		24,5	Shift to 25,0	24,4	Shift to 25,0	--

Supplementary information:
Note 1: Tma should be considered as directed by appliable requirement
Note 2: Tma is not included in assessment of Touch Temperatures (Clause 9)
Note 3: The maximum ambient temperature specified by manufacturer is 40°C.

IEC 62368-1			
Clause	Requirement + Test	Result - Remark	Verdict

5.4.1.4, 6.3.2, 9.0, B.2.6	**TABLE: Temperature measurements (model → output 5 Vdc; 4 A; Class II)**					P
	Supply voltage (V) .....:	See below	See below	See below	See below	—
	Ambient T_{min} (°C) .....:	--	--	--	--	—
	Ambient T_{max} (°C) .....:	See below	See below	See below	See below	—
	Tma (°C) .....:	--	--	--	--	—
Maximum measured temperature T of part/at:		T (°C)				Allowed T_{max} (°C)
Input voltage and position		264 V / label down	264 V / label down	264 V / label up	264 V / label up	
1. AC inlet		33,8	49,2	35,0	50,4	70
2. CX1		45,3	60,7	46,4	61,8	100
3. NF1 core		57,2	72,6	57,3	72,7	120
4. NF1 coil		60,3	75,7	60,5	75,9	120
5. PCB under DB1		65,5	80,9	65,9	81,3	130
6. C1		69,3	84,7	69,7	85,1	105
7. PCB under Q1		73,8	89,2	74,0	89,4	130
8. PC1		63,4	78,8	65,6	81,0	100
9. T1 coil		84,2	99,6	84,4	99,8	110
10. T1 core		82,4	97,8	83,3	98,7	110
11. CY1		77,9	93,3	77,9	93,3	125
12. PCB under Q2		90,9	106,3	90,3	105,7	130
13. C8		81,9	97,3	81,3	96,7	105
14. Output wire		60,8	76,2	60,1	75,5	80
15. Enclosure inside near T1 top		73,0	88,4	74,8	90,2	105
16. Enclosure inside near T1 bottom		70,0	85,4	66,0	81,4	105
19 Ambient		24,6	Shift to 40,0	24,6	Shift to 40,0	--
17. Enclosure inside near T1 top		56,9	57,3	60,1	60,5	77
18. Enclosure inside near T1 bottom		62,1	62,5	56,9	57,3	77
19. Ambient		24,6	Shift to 25,0	24,6	Shift to 25,0	--

Supplementary information:
Note 1: Tma should be considered as directed by appliable requirement
Note 2: Tma is not included in assessment of Touch Temperatures (Clause 9)
Note 3: The maximum ambient temperature specified by manufacturer is 40°C.

IEC 62368-1			
Clause	Requirement + Test	Result - Remark	Verdict

5.4.1.4, 6.3.2, 9.0, B.2.6	**TABLE: Temperature measurements (model → output 5,95 Vdc; 3 A; Class II)**					P
	Supply voltage (V) .....:	See below	See below	See below	See below	—
	Ambient T_{min} (°C) .....:	--	--	--	--	—
	Ambient T_{max} (°C) .....:	See below	See below	See below	See below	—
	Tma (°C) .....:	--	--	--	--	—
Maximum measured temperature T of part/at:		T (°C)				Allowed T_{max} (°C)
Input voltage and position		264 V / label down	264 V / label down	264 V / label up	264 V / label up	
1. AC inlet		33,9	49,3	34,3	49,8	70
2. CX1		42,8	58,2	43,6	59,1	100
3. NF1 core		52,8	68,2	53,4	68,9	120
4. NF1 coil		53,4	68,8	53,9	69,4	120
5. PCB under DB1		58,6	74,0	59,0	74,5	130
6. C1		62,0	77,4	61,9	77,4	105
7. PCB under Q1		66,6	82,0	66,0	81,5	130
8. PC1		53,5	68,9	55,0	70,5	100
9. T1 coil		74,0	89,4	74,2	89,7	110
10. T1 core		71,7	87,1	71,7	87,2	110
11. CY1		63,1	78,5	63,9	79,4	125
12. PCB under Q2		64,2	79,6	64,8	80,3	130
13. C8		59,2	74,6	59,9	75,4	105
14. Output wire		49,2	64,6	49,4	64,9	80
15. Enclosure inside near T1 top		58,6	74,0	59,7	75,2	105
16. Enclosure inside near T1 bottom		52,2	67,6	50,5	66,0	105
19 Ambient		24,6	Sfift to 40,0	24,5	Sfift to 40,0	--
17. Enclosure inside near T1 top		50,9	51,3	52,0	52,5	77
18. Enclosure inside near T1 bottom		47,6	48,0	45,5	46,0	77
19. Ambient		24,6	Shift to 25,0	24,5	Shift to 25,0	--

Supplementary information:
Note 1: Tma should be considered as directed by appliable requirement
Note 2: Tma is not included in assessment of Touch Temperatures (Clause 9)
Note 3: The maximum ambient temperature specified by manufacturer is 40°C.

IEC 62368-1			
Clause	Requirement + Test	Result - Remark	Verdict

5.4.1.4, 6.3.2, 9.0, B.2.6	**TABLE: Temperature measurements Accessible parts**					P
	Supply voltage (V) .....:					—
	Ambient T_{min} (°C) .....:					—
	Ambient T_{max} (°C) .....:					—
	Tma (°C) .....:	25	25	25	25	—
Maximum measured temperature T of part/at:		T (°C)				Allowed T_{max} (°C)

Supplementary information:
Note 1: Tma should be considered as directed by appliable requirement
Note 2: Tma is not included in assessment of Touch Temperatures (Clause 9)
See above heating test. Temperatures on accessible parts were measured on ambient 25°C.

5.4.1.10.2	**TABLE: Vicat softening temperature of thermoplastics**		N/A
Penetration (mm) .....:			—
Object/ Part No./Material	Manufacturer/trademark	T softening (°C)	

Supplementary information:

5.4.1.10.3	**TABLE: Ball pressure test of thermoplastics**		N/A
Allowed impression diameter (mm) .....:		≤ 2 mm	—
Object/Part No./Material	Manufacturer/trademark	Test temperature (°C)	Impression diameter (mm)

Supplementary information:
Phenolic material used which acceptable without test.

IEC 62368-1			
Clause	Requirement + Test	Result - Remark	Verdict

5.4.2.2, 5.4.2.4 and 5.4.3	TABLE: Minimum Clearances/Creepage distance (Class I model)						P
Clearance (cl) and creepage distance (cr) at/of/between:	Up (V)	U r.m.s. (V)	Frequency (kHz)[1]	Required cl (mm)	cl (mm)[2]	Required[3] cr (mm)	cr (mm)
Functional / basic and supplementary insulation							
Trace of L/N before fuse (F1)	340	240	0,06	1,27	2,6	2,4	2,6
Trace of different polarity across fuse (F1)	340	240	0,06	1,27	2,8	2,4	2,8
AC inlet earth-pin to DB1 body	340	240	0,06	1,27	3,9	2,4	3,9
Reinforced / double insulation							
Primary pin to secondary pin of CY1	420	250	0,06	2,54	6,7	5,0	6,7
Primary pin to secondary pin of CY2	420	250	0,06	2,54	7,8	5,0	7,8
Primary to secondary under optocoupler PC1	420	250	0,06	2,54	7,5	5,0	7,5
Trace of primary R8 to T1 secondary pin	536	297	68,4	2,54	5,1	6,0	8,5
D6 to T1 secondary trace	536	297	68,4	2,54	5,1	6,0	8,5
Primary to secondary under T1	536	297	68,4	2,54	6,8	6,0	6,8
T1 primary winding to secondary pin	536	297	68,4	2,54	6,5	6,0	6,5
T1 core to secondary pin	536	297	68,4	2,54	6,2	6,0	6,2
T1 core to secondary J5	536	297	68,4	2,54	5,5	6,0	6,3
T1 core to secondary D8	536	297	68,4	2,54	5,8	6,0	6,6
Primary heat sink HS1 to accessible enclosure	536	297	68,4	2,54	6,6	6,0	6,6
Primary NF1 to accessible enclosure	536	297	68,4	2,54	6,5	6,0	6,5
Primary L trace to accessible enclosure	536	297	68,4	2,54	8,5	6,0	8,5

Supplementary information:

Note 1: Only for frequency above 30 kHz
Note 2: See table 5.4.2.4 if this is based on electric strength test

Note 3: Provide Material Group: III/a/IIIb

The core of T1 considered as primary, the insulation between secondary to core is reinforced insulation.

Triple insulated wire used in T1 for secondary winding.

IEC 62368-1			
Clause	Requirement + Test	Result - Remark	Verdict

5.4.2.2, 5.4.2.4 and 5.4.3	TABLE: Minimum Clearances/Creepage distance (Class II model)						P
Clearance (cl) and creepage distance (cr) at/of/between:	Up (V)	U r.m.s. (V)	Frequency (kHz)[1]	Required cl (mm)	cl (mm)[2]	Required[3] cr (mm)	cr (mm)
Functional / basic and supplementary insulation							
Trace of L/N before fuse (F1)	340	240	0,06	1,27	2,6	2,4	2,6
Trace of different polarity across fuse (F1)	340	240	0,06	1,27	2,8	2,4	2,8
Reinforced / double insulation							
Primary pin to secondary pin of CY1	420	250	0,06	2,54	6,7	5,0	6,7
Primary pin to secondary pin of CY2	420	250	0,06	2,54	7,8	5,0	7,8
Primary to secondary under optocoupler PC1	420	250	0,06	2,54	7,5	5,0	7,5
Trace of primary R8 to T1 secondary pin	536	297	68,4	2,54	5,1	6,0	8,5
D6 to T1 secondary trace	536	297	68,4	2,54	5,1	6,0	8,5
Primary to secondary under T1	536	297	68,4	2,54	6,8	6,0	6,8
T1 primary winding to secondary pin	536	297	68,4	2,54	6,5	6,0	6,5
T1 core to secondary pin	536	297	68,4	2,54	6,2	6,0	6,2
T1 core to secondary J5	536	297	68,4	2,54	5,5	6,0	6,3
T1 core to secondary D8	536	297	68,4	2,54	5,8	6,0	6,6
Primary heat sink HS1 to accessible enclosure	536	297	68,4	2,54	6,6	6,0	6,6
Primary NF1 to accessible enclosure	536	297	68,4	2,54	6,5	6,0	6,5
Primary L trace to accessible enclosure	536	297	68,4	2,54	8,5	6,0	8,5

Supplementary information:

Note 1: Only for frequency above 30 kHz
Note 2: See table 5.4.2.4 if this is based on electric strength test

Note 3: Provide Material Group: III/a/IIIb

The core of T1 considered as primary, the insulation between secondary to core is reinforced insulation.

Triple insulated wire used in T1 for secondary winding.

IEC 62368-1			
Clause	Requirement + Test	Result - Remark	Verdict

5.4.2.3	**TABLE: Minimum Clearances distances using required withstand voltage (Class I model)**			P
	Overvoltage Category (OV):			II
	Pollution Degree:			2
Clearance distanced between:		Required withstand voltage	Required cl (mm)	Measured cl (mm)
See table 5.4.2.2, 5.4.2.4 and 5.4.3 above		2500 Vpeak	1,5 (basic/supplementary); 3,0 (reinforced)	See table 5.4.2.2, 5.4.2.4 and 5.4.3 above
Supplementary information:				

5.4.2.3	**TABLE: Minimum Clearances distances using required withstand voltage (Class II model)**			P
	Overvoltage Category (OV):			II
	Pollution Degree:			2
Clearance distanced between:		Required withstand voltage	Required cl (mm)	Measured cl (mm)
See table 5.4.2.2, 5.4.2.4 and 5.4.3 above		2500 Vpeak	1,5 (basic/supplementary); 3,0 (reinforced)	See table 5.4.2.2, 5.4.2.4 and 5.4.3 above
Supplementary information:				

5.4.2.4	**TABLE: Clearances based on electric strength test**			N/A
Test voltage applied between:		Required cl (mm)	Test voltage (kV) peak/ r.m.s. / d.c.	Breakdown Yes / No
Functional / basic and supplementary insulation				
Reinforced / double insulation				
Supplementary information: Clause 5.4.2.2 and 5.4.2.3 applied.				

IEC 62368-1			
Clause	Requirement + Test	Result - Remark	Verdict

5.4.4.2, 5.4.4.5 c) 5.4.4.9	TABLE: Distance through insulation measurements				P
Distance through insulation di at/of:	Peak voltage (V)	Frequency (kHz)	Material	Required DTI (mm)	DTI (mm)
Enclosure inside to outside	536	68,4	**	0,4	**
T1 bobbin	536	68,4	**	0,4	**
Optocoupler PC1	420	0,06	**	0,4	**
Supplementary information: ** See table 4.1.2 for details.					

5.4.9	TABLE: Electric strength tests (Class I model) **		P
Test voltage applied between:	Voltage shape (AC, DC)	Test voltage (V)	Breakdown Yes / No
Functional:			
Basic/supplementary:			
Line to Neutral (fuse removed)	DC	2500	No
Line/Neutral pins to earthing pin	DC	2500	No
Heat-Shrinkable tube (used on earthing wire)	DC	2500	No
Reinforced:			
From primary (L/N) to secondary (output)	DC	4000	No
From primary (L/N) to enclosure with metal foil	DC	4000	No
From T1 primary to T1 secondary	DC	4000	No
T1 core to T1 secondary	DC	4000	No
Insulation tape (one layer)	DC	4000	No
From enclosure inside to enclosure outside	DC	4000	No
T1 bobbin	DC	4000	No
Supplementary information: By applying a d.c. voltage in one polarity and then repeat it in reverse polarity. All sources of T1, insulation tape, enclosure and bobbin listed in table 4.1.2 have been considered. ** Test repeated at SIQ Ljubljana.			

IEC 62368-1			
Clause	Requirement + Test	Result - Remark	Verdict

5.4.9	TABLE: Electric strength tests (Class II model) **		P
Test voltage applied between:	Voltage shape (AC, DC)	Test voltage (V)	Breakdown Yes / No
Functional:			
Basic/supplementary:			
Line to Neutral (fuse removed)	DC	2500	No
Reinforced:			
From primary (L/N) to secondary (output)	DC	4000	No
From primary (L/N) to enclosure with metal foil	DC	4000	No
From T1 primary to T1 secondary	DC	4000	No
T1 core to T1 secondary	DC	4000	No
Insulation tape (one layer)	DC	4000	No
From enclosure inside to enclosure outside	DC	4000	No
T1 bobbin	DC	4000	No

Supplementary information:
By applying a d.c. voltage in one polarity and then repeat it in reverse polarity.
All sources of T1, insulation tape, enclosure and bobbin listed in table 4.1.2 have been considered.
** Test repeated at SIQ Ljubljana.

IEC 62368-1			
Clause	Requirement + Test	Result - Remark	Verdict

5.5.2.2	TABLE: Stored discharge on capacitors				P
Supply Voltage (V), Hz	Test Location	Operating Condition (N, S)	Switch position On or off	Measured Voltage (after 2 seconds)	ES Classification
264 V/60 Hz	L to N	N	--	24	ES1
264 V/60 Hz	L to N	S (R4 opened)	--	44	ES1

Supplementary information:

X-capacitors installed for testing are:

☒ bleeding resistor rating: R1, R2 (2,0 MΩ each; separately approved components; refer to table 4.1.2)

☐ ICX:

Notes:

A. Test Location:

Phase to Neutral; Phase to Phase; Phase to Earth; and/or Neutral to Earth

B. Operating condition abbreviations:

N – Normal operating condition (e.g., normal operation, or open fuse); S –Single fault condition

IEC 62368-1			
Clause	Requirement + Test	Result - Remark	Verdict

5.6.6.2	TABLE: Resistance of protective conductors and terminations (Class I model) **				P
Accessible part	Test current (A)	Duration (min)	Voltage drop (V)	Resistance (Ω)	
Earthing pin of AC inlet to the earthing wire end.	40	2	0,155	0,004	
Supplementary information: The resistance of protective bonding path did not exceed 0,1 Ohm. ** Test repeated at SIQ Ljubljana.					

5.7.2.2, 5.7.4	TABLE: Earthed accessible conductive part **	P
Supply voltage .....:	264 Vac	—
Location	Test conditions specified in 6.1 of IEC 60990 or Fault Condition No in IEC 60990 clause 6.2.2.1 through 6.2.2.8, except for 6.2.2.7	Touch current (mA)
	1 (NP/RP)	Normal: 0,2 Reverse: 0,2
	2*	N/A
	3	N/A
	4	N/A
	5	N/A
	6	N/A
	8	N/A

Supplementary Information:

Notes:

[1] Supply voltage is the anticipated maximum Touch Voltage

[2] Earthed neutral conductor [Voltage differences less than 1% or more]

[3] Specify method used for measurement as described in IEC 60990 sub-clause 4.3

[4] IEC60990, sub-clause 6.2.2.7, Fault 7 not applicable.

[5] (*) IEC60990, sub-clause 6.2.2.2 is not applicable if switch or disconnect device (e.g., appliance coupler) provided.

Faults:

1: PE of not reliable earthed equipment disconnected. Normal and reverse polarity.

2: Neutral of single-phase equipment open. Normal and reverse polarity.

3: EUT use on IT systems shall be tested with each phase conductor faulted to earth (switch g)

4: Three phase equipment should be tested with each phase conductor open, one at the time.

5: Single phase equipment use on IT system or on 3P delta-system shall be tested with a 3P power system, with each phase faulted to PE, one at the time in combination with normal and reverse polarity and separately with each phase conductor open one at the time and in combination with normal and reverse polarity.

6: Three phase equipment for use on centre-earthed delta supply systems shall be tested on a delta supply system with each delta-leg centre-earthed, one at the time.

8: Accessible conductive parts which are only incidentally electrically connected to other parts shall be tested for both when connected electrically to other parts and when not. Examples of such parts: doors and assemblies attached by metal hinges, adhesively-bonded labels which have an accessible conductive part etc.

IEC 62368-1			
Clause	Requirement + Test	Result - Remark	Verdict

Measured touch current to earthed accessible conductive part does not exceed ES2 limits.
** Test repeated at SIQ Ljubljana.

6.2.2	Table: Electrical power sources (PS) measurements for classification				P
Source	Description	Measurement	Max Power after 3 s	Max Power after 5 s*)	PS Classification
--	--	Power (W) :	--	--	--
		V_A (V) :	--	--	
		I_A (A) :	--	--	

Supplementary Information:
See table annex Q.1 for details, LPS equivalent to PS2.

6.2.3.1	Table: Determination of Potential Ignition Sources (Arcing PIS)			N/A
Location	Open circuit voltage After 3 s (Vp)	Measured r.m.s current (Irms)	Calculated value (V_p x I_{rms})	Arcing PIS? Yes / No

Supplementary information:
An Arcing PIS requires a minimum of 50 V (peak) a.c. or d.c. An Arcing PIS is established when the product of the open circuit voltage (V_p) and normal operating condition rms current (I_{rms}) is greater than 15.
All internal circuits considered PS3 arcing PIS.

6.2.3.2	Table: Determination of Potential Ignition Sources (Resistive PIS)				N/A
Circuit Location (x-y)	Operating Condition (Normal / Describe Single Fault)	Measured wattage or VA During first 30 s (W / VA)	Measured wattage or VA After 30 s (W / VA)	Protective Circuit, Regulator, or PTC Operated? Yes / No (Comment)	Resistive PIS? Yes/No

Supplementary Information:
A combination of voltmeter, VA and ammeter IA may be used instead of a wattmeter.
If a separate voltmeter and ammeter are used, the product of (VA x IA) is used to determine Resistive PIS classification.
A Resistive PIS: (a) dissipates more than 15 W, measured after 30 s of normal operation, <u>or</u> (b) under single fault conditions has either a power exceeding 100 W measured immediately after the introduction of the fault if electronic circuits, regulators or PTC devices are used, or has an available power exceeding 15 W measured 30 s after introduction of the fault.
All internal circuits considered PS3, resistive PIS.

IEC 62368-1			
Clause	Requirement + Test	Result - Remark	Verdict

8.5.5	TABLE: High Pressure Lamp		N/A
Description	Values	Energy Source Classification	
Lamp type .....:		—	
Manufacturer.....:		—	
Cat no.....:		—	
Pressure (cold) (MPa) .....:		MS_	
Pressure (operating) (MPa).....:		MS_	
Operating time (minutes).....:		—	
Explosion method .....:		—	
Max particle length escaping enclosure (mm)..:		MS_	
Max particle length beyond 1 m (mm) .....:		MS_	
Overall result .....:			
Supplementary information:			

IEC 62368-1			
Clause	Requirement + Test	Result - Remark	Verdict

B.2.5	TABLE: Input test						P
U (V)	I (A)	I rated (A)	P (W)	P rated (W)	Fuse No	I fuse (A)	Condition/status
5 Vdc output model							
90 V/50 Hz	0,473	--	24,99	--	F1	2,0	Max. normal output load 5 Vdc, 4,0 A
90 V/60 Hz	0,481	--	24,93	--	F1	2,0	
100 V/50 Hz	0,436	0,5	24,74	--	F1	2,0	
100 V/60 Hz	0,447	0,5	24,73	--	F1	2,0	
240 V/50 Hz	0,255	0,5	24,09	--	F1	2,0	
240 V/60 Hz	0,263	0,5	24,15	--	F1	2,0	
264 V/50 Hz	0,243	--	24,16	--	F1	2,0	
264 V/60 Hz	0,251	--	24,21	--	F1	2,0	
5,95 Vdc output model							
90 V/50 Hz	0,416	--	22,33	--	F1	2,0	Max. normal output load 5,95 Vdc, 3,0 A
90 V/60 Hz	0,422	--	22,28	--	F1	2,0	
100 V/50 Hz	0,378	0,5	22,07	--	F1	2,0	
100 V/60 Hz	0,387	0,5	22,01	--	F1	2,0	
240 V/50 Hz	0,220	0,5	21,58	--	F1	2,0	
240 V/60 Hz	0,228	0,5	21,58	--	F1	2,0	
264 V/50 Hz	0,208	--	21,55	--	F1	2,0	
264 V/60 Hz	0,216	--	21,51	--	F1	2,0	

Supplementary information:

The steady-state input current did not exceed the rated current at the rated voltage by more than 10% under the maximum normal load.

** Test repeated at SIQ Ljubljana.

IEC 62368-1			
Clause	Requirement + Test	Result - Remark	Verdict

B.3	TABLE: Abnormal operating condition tests							P
Ambient temperature (°C) .....:						40 or 25		—
Power source for EUT: Manufacturer, model/type, output rating ..:						Abnormal tests: Elettrotest TPS/M, 0-300 V, 9 kVA Short-circuit tests: mains network		—
Component No.	Abnormal Condition	Supply voltage, (V)	Test time (ms)	Fuse no.	Fuse current, (A)	T-couple	Temp. (°C)	Observation
5 Vdc output model								
Output	OL	264	8h36min	F1	0,189→ 0,228→ 0,231→ 0,005	1. PCB under DB1 2. PCB under Q1 3. T1 coil 4. T1 core 5. PCB under Q2 6. Enclosure outpise near T1 top 7. Enclosure outpise near T1 bottom 8. Ambient	1. 85,4°C 2. 98,0°C 3. 116,7°C 4. 113,8°C 5. 131,7°C 6. 75,7°C 7. 85,5°C 8. 24,5°C	Overload to 5,3 A (Constant temperatures were obtained), and shut down at 5,4 A. Output + to – 5,17 Vdc
Output	SC	264	10min	F1	0,189→ 0,005	--	--	Unit shutdown, no hazard. Output + to -: 0V
5,95 Vdc output model								

IEC 62368-1			
Clause	Requirement + Test	Result - Remark	Verdict

B.3	TABLE: Abnormal operating condition tests							P
Ambient temperature (°C) .....:						40 or 25		—
Power source for EUT: Manufacturer, model/type, output rating .:						Abnormal tests: Elettrotest TPS/M, 0-300 V, 9 kVA Short-circuit tests: mains network		—
Component No.	Abnormal Condition	Supply voltage, (V)	Test time (ms)	Fuse no.	Fuse current, (A)	T-couple	Temp. (°C)	Observation
Output	OL	264	8h36min	F1	0,164→ 0,175→ 0,180→ 0,005	1. PCB under DB1 2. PCB under Q1 3. T1 coil 4. T1 core 5. PCB under Q2 6. Enclosure outpise near T1 top 7. Enclosure outpise near T1 bottom 8. Ambient	1. 63,6°C 2. 76,5°C 3. 85,8°C 4. 83,6°C 5. 80,1°C 6. 54,2°C 7. 60,1°C 8. 24,7°C	Overload to 3,38 A (Constant temperatures were obtained), and shut down at 3,4 A. Output + to – 6,20 Vdc
Output	SC	264	10min	F1	0,164→ 0,005	--	--	Unit shutdown, no hazard. Output + to -: 0V

Supplementary information:

1. SC – Short circuit; OP – open circuit; OL - Overload

Test table is provided to record abnormal and fault conditions for all applicable energy sources including Thermal burn injury. Column “Abnormal/Fault.” Specify if test condition by indicating “Abnormal” then the condition for a Clause B.3 test or “Single Fault” then the condition for Clause B.4.

No ignition during and after all tests.

During and after abnormal operating condition tests the output voltage did not increase by more than 10% of its rated output voltage under normal operating condition.

IEC 62368-1			
Clause	Requirement + Test	Result - Remark	Verdict

B.4	TABLE: Fault condition tests								P
Ambient temperature (°C) .....:						40 or 25			—
Power source for EUT: Manufacturer, model/type, output rating ..:						Abnormal tests: Elettrotest TPS/M, 0-300 V, 9 kVA Short-circuit tests: mains network			—
Component No.	Fault Condition	Supply voltage, (V)	Test time (ms)	Fuse no.	Fuse current, (A)	T-couple	Temp. (°C)	Observation	
5,95 Vdc output model									
DB1	SC (~ to +)	264	1s	F1	0,164→0	--	--	#F1 open no hazard. Output + to -: 0V	
C1	SC	264	1s	F1	0,164→0	--	--	#F1 open no hazard. Output + to -: 0V	
T1	SC (pin 1-2)	264	10min	F1	0,164→0,005	--	--	Unit shutdown, no hazard. Output + to -: 0V	
T1	SC (pin 3-4)	264	10min	F1	0,164→0,005	--	--	Unit shutdown, no hazard. Output + to -: 0V	
T1	SC (pin 6-9)	264	10min	F1	0,164→0,005	--	--	Unit shutdown, no hazard. Output + to -: 0V	
T1	SC (pin 7-8)	264	10min	F1	0,164→0,005	--	--	Unit shutdown, no hazard. Output + to -: 0V	
Q2	SC (pin D-S)	264	10min	F1	0,164→0,005	--	--	Unit shutdown, no hazard. Output + to -: 0V	
D1	SC	264	10min	F1	0,164→0,005	--	--	Unit shutdown, no hazard. Output + to -: 0V	
Q1	SC (pin 1-2)	264	1s	F1	0,164→0	--	--	#F1 open, Q1 damaged no hazard. Output + to -: 0V	
Q1	SC (pin 2-3)	264	1s	F1	0,164→0	--	--	#F1 open, Q1 damaged no hazard. Output + to -: 0V	
Q1	SC (pin 1-3)	264	10min	F1	0,164→0,005	--	--	Unit shutdown, no hazard. Output + to -: 0V	
R10	SC	264	10min	F1	0,164→0,005	--	--	Unit shutdown, no hazard. Output + to -: 0V	

IEC 62368-1								
Clause	Requirement + Test					Result - Remark		Verdict
U1	SC (pin 2-5)	264	10min	F1	0,164→0,005	--	--	U1 damaged, no hazard. Repeat three times with same results. Output + to -: 0V
U1	SC (pin 2-6)	264	10min	F1	0,164→0,005	--	--	Unit shutdown, no hazard. Output + to -: 0V
PC1	SC (pin 1-2)	264	10min	F1	0,164→0,005	--	--	Unit shutdown, no hazard. Output + to -: 0V
PC1	SC (pin 3-4)	264	10min	F1	0,164→0,005	--	--	Unit shutdown, no hazard. Output + to -: 0V
PC1	OC (pin 1)	264	10min	F1	0,164→0,005	--	--	Unit shutdown, no hazard. Output + to -: 0V
PC1	OC (pin 3)	264	10min	F1	0,164→0,005	--	--	Unit shutdown, no hazard. Output + to -: 0V
D7	SC	264	30min	F1	0,164→0,162	--	--	Normal operation, no hazard. Output +to-: 6,20 V
5 Vdc output model								
T1	SC (pin 6-9)	264	10min	F1	0,189→0,005	--	--	Unit shutdown, no hazard. Output + to -: 0V
T1	SC (pin 7-8)	264	10min	F1	0,189→0,005	--	--	Unit shutdown, no hazard. Output + to -: 0V
Q2	SC (pin D-S)	264	10min	F1	0,189→0,005	--	--	Unit shutdown, no hazard. Output + to -: 0V
D1	SC	264	10min	F1	0,189→0,005	--	--	Unit shutdown, no hazard. Output + to -: 0V
PC1	SC (pin 1-2)	264	10min	F1	0,189→0,005	--	--	Unit shutdown, no hazard. Output + to -: 0V
PC1	SC (pin 1)	264	10min	F1	0,189→0,005	--	--	Unit shutdown, no hazard. Output + to -: 0V

IEC 62368-1			
Clause	Requirement + Test	Result - Remark	Verdict

Supplementary information:

1. SC – Short Circuit; OC – Open Circuit; OL – Overload
2. After each oabove test, unit can pass the dielectric strength test specified in table 5.4.9.
3. # Repeated component fault test on all alternate current fuse listed in table 4.1.2, with the same results.
4.Output terminal complies with ES1 during and after all tests.
5. During and after abnormal fault conditions, the output voltage did not increase by more than 10% of its rated output voltage under normal oprating condition.

Annex M	**TABLE: Batteries**								N/A
The tests of Annex M are applicable only when appropriate battery data is not available									
Is it possible to install the battery in a reverse polarity position? ..... :									
	Non-rechargeable batteries			Rechargeable batteries					
	Discharging		Un-intentional charging	Charging		Discharging		Reversed charging	
	Meas. current	Manuf. Specs.		Meas. current	Manuf. Specs.	Meas. current	Manuf. Specs.	Meas. current	Manuf. Specs.
Max. current during normal condition									
Max. current during fault condition									
Test results:									Verdict
- Chemical leaks									
- Explosion of the battery									
- Emission of flame or expulsion of molten metal									
- Electric strength tests of equipment after completion of tests									
Supplementary information:									

IEC 62368-1			
Clause	Requirement + Test	Result - Remark	Verdict

Annex M.4	Table: Additional safeguards for equipment containing secondary lithium batteries				N/A
Battery/Cell No.	Test conditions	Measurements			Observation
		U	I (A)	Temp (C)	
	Normal				
	Abnormal				
	Single fault –SC/OC				
	Normal				
	Abnormal				
	Single fault – SC/OC				
Supplementary Information:					

Battery identification	Charging at T_{lowest} (°C)	Observation	Charging at $T_{highest}$ (°C)	Observation
Supplementary Information:				

IEC 62368-1			
Clause	Requirement + Test	Result - Remark	Verdict

Annex Q.1	TABLE: Circuits intended for interconnection with building wiring (LPS)						P
Note: Measured UOC (V) with all load circuits disconnected:							
Output Circuit	Components	U_{oc} (V)	I_{sc} (A)		S (VA)		
			Meas.	Limit	Meas.	Limit	
5 Vdc output							
Output	Output overload	5,17	5,3	8,0	26,0	100	
Output	Q1 pin 1-2 SC	0	0	8,0	0	100	
Output	Q1 pin 2-3 SC	0	0	8,0	0	100	
Output	Q1 pin 1-3 SC	0	0	8,0	0	100	
Output	U1 pin 2-5 SC	0	0	8,0	0	100	
Output	U1 pin 2-6 SC	0	0	8,0	0	100	
Output	PC1 pin 1-2 SC	0	0	8,0	0	100	
Output	PC1 pin 3-4 SC	0	0	8,0	0	100	
Output	PC1 pin 1 OC	0	0	8,0	0	100	
Output	PC1 pin 3 OC	0	0	8,0	0	100	
Output	R10 SC	0	0	8,0	0	100	
Output	R17 SC	5,17	5,3	8,0	26,0	100	
Output	R18 SC	0	0	8,0	0	100	
5,95 Vdc output							
Output	Output overload	6,2	3,86	8,0	22,62	100	
Output	Q1 pin 1-2 SC	0	0	8,0	0	100	
Output	Q1 pin 2-3 SC	0	0	8,0	0	100	
Output	Q1 pin 1-3 SC	0	0	8,0	0	100	
Output	U1 pin 2-5 SC	0	0	8,0	0	100	
Output	U1 pin 2-6 SC	0	0	8,0	0	100	
Output	PC1 pin 1-2 SC	0	0	8,0	0	100	
Output	PC1 pin 3-4 SC	0	0	8,0	0	100	
Output	PC1 pin 1 OC	0	0	8,0	0	100	
Output	PC1 pin 3 OC	0	0	8,0	0	100	
Output	R10 SC	0	0	8,0	0	100	
Output	R17 SC	6,2	3,86	8,0	22,62	100	
Output	R18 SC	0	0	8,0	0	100	
Supplementary Information: SC=Short circuit, OC=Open circuit							

IEC 62368-1			
Clause	Requirement + Test	Result - Remark	Verdict

T.2, T.3, T.4, T.5	TABLE: Steady force test					P
Part/Location	Material	Thickness (mm)	Force (N)	Test Duration (sec)	Observation	
Enclosure top (T4, T5)	*	min. 2,0	100/250	5	Enclosure remained intact; no crack/opening developed. Internal ES3, TS3 were not accessible after the test. No insulation breakdown.	
Enclosure side (T4, T5)	*	min. 2,0	100/250	5	Enclosure remained intact; no crack/opening developed. Internal ES3, TS3 were not accessible after the test. No insulation breakdown.	
Enclosure bottom (T4, T5)	*	min. 2,0	100/250	5	Enclosure remained intact; no crack/opening developed. Internal ES3, TS3 were not accessible after the test. No insulation breakdown.	
Relevant internal components (T.2)	--	--	10	5	No insulation breakdown. No reduction the clearance and creepage distances.	
Supplementary information: * The material of enclosure, see table 4.1.2 for detail.						

IEC 62368-1			
Clause	Requirement + Test	Result - Remark	Verdict

T.6, T.9	TABLE: Impact tests				P
Part/Location	Material	Thickness (mm)	Vertical distance (mm)	Observation	
Enclosure top, closed to transformer (T.6)	*	min. 2,0	1300	Enclosure remained intact; no crack/opening developed. Internal ES3, TS3 were not accessible after the test. No insulation breakdown.	
Enclosure bottom, closed to transformer (T.6)	*	min. 2,0	1300	Enclosure remained intact; no crack/opening developed. Internal ES3, TS3 were not accessible after the test. No insulation breakdown.	
Enclosure side (T.6)	*	min. 2,0	1300	Enclosure remained intact; no crack/opening developed. Internal ES3, TS3 were not accessible after the test. No insulation breakdown.	
Supplementary information: * The material of enclosure, see table 4.1.2 for detail.					

T.7	TABLE: Drop tests				P
Part/Location	Material	Thickness (mm)	Drop Height (mm)	Observation	
Enclosure top	*	min. 2,0	1000	Enclosure remained intact; no crack/opening developed. Internal ES3, TS3 were not accessible after the test. No insulation breakdown.	
Enclosure side	*	min. 2,0	1000	Enclosure remained intact; no crack/opening developed. Internal ES3, TS3 were not accessible after the test. No insulation breakdown.	
Enclosure bottom	*	min. 2,0	1000	Enclosure remained intact; no crack/opening developed. Internal ES3, TS3 were not accessible after the test. No insulation breakdown.	
Supplementary information: * The material of enclosure, see table 4.1.2 for detail.					

IEC 62368-1			
Clause	Requirement + Test	Result - Remark	Verdict

T.8	TABLE: Stress relief test					P
Part/Location	Material	Thickness (mm)	Oven Temperature (°C)	Duration (h)	Observation	
Enclosure (T.8)	*	min. 2,0	106	7	Enclosure remained intact, no shrinkable or distortion after the test.	
Supplementary information: * The material of enclosure, see table 4.1.2 for detail.						

Enclosure No. 1

National differences according to IEC 62368-1:2014 (Second Edition)

(54 pages including this cover page)

Country	Australia
IECEE Member NCB	--
IEC Standard	IEC 62368-1:2014 (Ed. 2.0)
Corresponding National Standard	AS/NZS 62368.1:2018
Regulatory Requirements	N/A

IEC 62368_1B ATTACHMENT			
Clause	Requirement + Test	Result - Remark	Verdict
ATTACHMENT TO TEST REPORT IEC 62368-1 (AUSTRALIA / NEW ZEALAND) NATIONAL DIFFERENCES (**Audio/video, information and communication technology equipment**)			
Differences according to .....:	AS/NZS 62368.1:2018		
Attachment Form No.....:	AU_NZ_ND_IEC62368_1B		
Attachment Originator .....:	JAS-ANZ		
Master Attachment.....:	2019-02-04		
Copyright © 2019 IEC System for Conformity Testing and Certification of Electrical Equipment (IECEE), Geneva, Switzerland. All rights reserved.			
	National Differences		—
Appendix ZZ	Variations to IEC 62368-1:2014 (ED. 2.0) for Australia and New Zealand		—
ZZ1 Scope	This Appendix lists the normative variations to IEC 62368-1:2014 (ED. 2.0)		—
ZZ2 Variations	The following modifications are required for Australian/New Zealand conditions:		—
2	*Add* the following to the list of normative references: The following normative documents are referenced in Appendix ZZ: -AS/NZS 3112, *Approval and test specification—Plugs and socket-outlets* -AS/NZS 3123, *Approval and test specification—Plugs, socket-outlets and couplers for general industrial application* -AS/NZS 3191, *Electric flexible cords* -AS/NZS 60065, *Audio, video and similar electronic apparatus—Safety requirements (IEC 60065:2015 (ED.8.0) MOD)* -AS/NZS 60320.1, *Appliance couplers for household and similar general purposes, Part 1: General requirements (IEC 60320-1, Ed.2.1 (2007) MOD)* -AS/NZS 60320.2.2, *Appliance couplers for household and similar general purposes Part 2.2: Interconnection couplers for household and similar equipment (IEC 60320-2-2, Ed.2.0 (1998) MOD)* -AS/NZS 60695.2.11, *Fire hazard testing, Part*	Considered.	P

IEC 62368_1B ATTACHMENT			
Clause	Requirement + Test	Result - Remark	Verdict
	2.11: Glowing/hot wire based test methods—Glow-wire flammability test method for end-products -AS/NZS 60695.11.5, *Fire hazard testing, Part 11.5: Test flames—Needle-flame test method—Apparatus, confirmatory test arrangement and guidance* -AS/NZS 60695.11.10, *Fire hazard testing, Part 11.10: Test flames—50 W horizontal and vertical flame test methods* -AS/NZS 60884.1, *Plugs and socket-outlets for household and similar purposes, Part 1: General requirements* -AS/NZS 60950.1:2015, *Information technology equipment—Safety*, Part 1: *General requirements (IEC 60950-1, Ed.2.2 (2013), MOD)* IEC 61032:1997, *Protection of persons and equipment by enclosures—Probes for verification* -AS/NZS 61558.1:2008 (including Amendment 2:2015), *Safety of Power Transformers, Power Supplies, Reactors and Similar Products, Part 1: General requirements and tests (IEC 61558-1 Ed 2.1, MOD)* -AS/NZS 61558.2.16, *Safety of transformers, reactors, power supply units and similar products for voltages up to 1 100 V, Part 2.16: Particular requirements and tests for switch mode power supply units and transformers for switch mode power supply units.*		
4.1.1	**Application of requirements and acceptance of materials, components and subassemblies** 1 *Replace* the text 'IEC 60950-1' with 'AS/NZS 60950.1:2015'. 2 *Replace* the text 'IEC 60065' with 'AS/NZS 60065'.	Considered.	P
4.7	**Equipment for direct insertion into mains socket-outlets**		N/A
4.7.2	**Requirements** *Delete* the text of the second paragraph and *replace* with the following: Equipment with a plug portion, suitable for insertion into a 10 A 3-pin flat-pin socket-outlet complying with AS/NZS 3112 shall comply with the requirements in AS/NZS 3112 for equipment with integral pins for insertion into socket-outlets.		N/A
4.7.3	**Compliance Criteria** *Delete* the first paragraph and Note 1 and Note 2 and *replace* with the following: *Compliance is checked by inspection and, if necessary, by the tests in AS/NZS 3112.*		N/A
4.8	*Delete* existing clause title and *replace* with the following: **4.8 Products containing coin/button cell batteries**		N/A

IEC 62368_1B ATTACHMENT			
Clause	Requirement + Test	Result - Remark	Verdict
4.8.1	**General** 1 Second dashed point, *delete* the text and *replace* with the following: – include coin/button cell batteries with a diameter of 32 mm or less. 2 After the second dashed point, *insert* the following Note: NOTE 1: Batteries are specified in IEC 60086-2. 3 After the third dashed point, *renumber* the existing Note as 'NOTE 2'. 4 Fifth dashed point, *delete* the word 'lithium'.		N/A
4.8.2	**Instructional Safeguard** First line, *delete* the word 'lithium'.		N/A
4.8.3	**Construction** First line, after the word 'Equipment' *insert* the words 'containing one or more coin/button batteries and'		N/A
4.8.5	**Compliance criteria** *Delete* the first paragraph and *replace* with the following: *Compliance is checked by applying a force of 30 N +/-1 N for 10 s to the battery compartment door/cover by a rigid test finger according to test probe 11 of IEC 61032:1997 at the most unfavourable place and in the most unfavourable direction. The force shall be applied in one direction at a time.*		N/A
5.4.10.2	**Test methods**		N/A
5.4.10.2.1	**General** *Delete* the first paragraph and *replace* with the following: In Australia only, the separation is checked by the test of both Clause 5.4.10.2.2 and Clause 5.4.10.2.3. In New Zealand, the separation is checked by the test of either Clause 5.4.10.2.2 or Clause 5.4.10.2.3.		N/A
Table 29	*Replace* the table with the following:		N/A

Parts	Impulse test		Steady state test	
	New Zealand	Australia	New Zealand	Australia
Parts indicated in Clause 5.4.10.1 a) [a]	2.5 kV 10/700 µs	7.0 kV for hand-held telephones and headsets, 2.5 kV for other equipment. 10/700 µs	1.5 kV	3 kV
Parts indicated in Clause 5.4.10.1 b) and c) [b]	1.5 kV 10/700 µs [c]		1.0 kV	1.5 kV

[a] Surge suppressors shall not be removed.
[b] Surge suppressors may be removed, provided that such devices pass the impulse test of Clause 5.4.10.2.2 when tested as components outside the equipment.
[c] During this test, it is allowed for a surge suppressor to operate and for a sparkover to occur in a GDT.

IEC 62368_1B ATTACHMENT			
Clause	Requirement + Test	Result - Remark	Verdict
5.4.10.2.2	After the first paragraph, *insert* new Notes 201 and 202 as follows: NOTE 201 For Australia, the 7 kV impulse simulates lightning surges on typical rural and semi-rural network lines. NOTE 202 For Australia, the value of 2.5 kV for Clause 5.4.10.1 a) was chosen to ensure the adequacy of the insulation concerned and does not necessarily simulate likely overvoltages.		N/A
5.4.10.2.3	After the first paragraph, *insert* new Notes 201 and 202 as follows: NOTE 201 For Australia, where there are capacitors across the insulation under test, it is recommended that d.c. test voltages are used. NOTE 202 The 3 kV and 1.5 kV values for Australia have been determined considering the low frequency induced voltages from the power supply distribution system.		N/A
6	**Electrically-caused fire**		P
6.1	**General** After the first paragraph, *insert* the following new paragraph: Alternatively, the requirements of Clauses 6.2 to 6.5.2 are considered to be fulfilled if the equipment complies with the requirements of Clause 6.202		P
6.6	After Clause 6.6, *add* the new Clauses 6.201 and 6.202 as follows: **6.201 External power supplies, docking stations and other similar devices** and **6.202 Resistance to fire—Alternative tests** (see special national conditions)		P
8.5.4	**Special categories of equipment comprising moving parts**		N/A
8.5.4.1	**Large data storage equipment** In the first dashed row and the second dashed rows *replace* 'IEC 60950-1:2005' with 'AS/NZS 60950.1:2015'.		N/A
8.6	**Stability of equipment**		N/A

IEC 62368_1B ATTACHMENT			
Clause	Requirement + Test	Result - Remark	Verdict
8.6.1 and Table 36	**Requirements** 1. Table 36, *insert* Footnote c at the end of the 'Glass slide' heading, and *add* a new Footnote c after the text of Footnote b in the last row of Table 36 as follows: [c] The glass slide test is not applicable to floor standing equipment, even though the equipment may have controls or a display. 2. Table 36, fifth row, *insert* '[201]' at the end of 'No stability requirements' 3. Table 36, ninth row, *insert* '[201]' at the end of 'No stability requirements' 4. Table 36, *add* the following new footnote: [201] MS2 and MS3 television sets and display devices, designed only for fixing to a wall, ceiling or equipment rack, are not subjected to stability requirements only if the instructional safeguard of Clause 8.6.1.201 is provided. Otherwise, the glass slide requirements of Clause 8.6.4 and horizontal force requirements of Clause 8.6.5 apply. 5. Second paragraph beneath Table 36, *delete* the words 'MS2 and MS3 television sets' and *replace* with 'MS2 and MS3 television sets and display devices'		N/A
8.6.1	After Clause 8.6.1 *add* the following new clauses: **8.6.1.201 Instructional safeguard for fixed-mount television sets** (see special national conditions)		N/A
Annex F **Paragraph F.3.5.1**	**Mains appliance outlet and socket-outlet markings** *Replace* 'IEC 60320-2-2' with 'AS/NZS 60320.2.2'.		N/A
Annex G **Paragraph G.4.2**	**Mains connectors** 1 In the second line *insert* 'or AS/NZS 3123' after 'IEC 60906-1'. 2 In the second line *insert* 'or AS/NZS 60320 series' after 'IEC 60320 series' 3 *Add* the following new paragraph: 10 A or 15 A 250 V flat pin plugs for the connection of equipment to mains-powered socket-outlets for household or similar general use shall comply with AS/NZS 3112 or AS/NZS 60884.1.		N/A
Paragraph G.5.3.1	**Transformers, General** 1 In the third dashed point *replace* 'IEC 61558-1 and the relevant parts of IEC 61558-2' with 'AS/NZS 61558-1 and the relevant parts of AS/NZS 61558.2' 2 In the fourth dashed point *replace* 'IEC 61558-2-16' with 'AS/NZS 61558.2.16'.		P
Paragraph G.7.1	**Mains supply cords, General** *In the fourth dashed paragraph, replace 'IEC 60320-1' with 'AS/NZS 60320.1'*		N/A

IEC 62368_1B ATTACHMENT			
Clause	Requirement + Test	Result - Remark	Verdict
Table G.5	**Sizes of conductors** 1 In the second row, first column, *delete* ‘6’ and *replace* with ‘7.5’ 2 In the second row, second column, *delete* ‘0,75’ and *replace* with ‘0.75[b] 3 *Delete* Note 1. 4 *Replace* ‘NOTE 2’ with ‘NOTE:’. 5 *Delete* the text of ‘Footnote b’ and *replace* with the following: [b] This nominal cross-sectional area is only allowed for Class II appliances if the length of the power supply cord, measured between the point where the cord, or cord guard, enters the appliance, and the entry to the plug does not exceed 2 m (0.5 mm2 three-core supply flexible cords are not permitted; see AS/NZS 3191). 6 In Footnote c *replace* ‘IEC 60320-1’ with ‘AS/NZS 60320.1’ 7 In Footnote d *replace* ‘IEC 60320-1’ with ‘AS/NZS 60320.1’		N/A
Annex M **Paragraph M.3.2**	**Protection circuits for batteries provided within the equipment, Test method** After the first dashed point *add* the following Note: NOTE 201: In cases where the voltage source is provided by power from an unassociated power source, consideration should be given to the effects of possible single fault conditions in the unassociated equipment. If the power source is unknown then it should be assumed that the maximum limit of SELV may be applied to the source input under assumed single fault conditions in the source when assessing the charging circuit in the equipment under test.		N/A
	Special national conditions (if any)		N/A

IEC 62368_1B ATTACHMENT			
Clause	Requirement + Test	Result - Remark	Verdict
6.201	**External power supplies, docking stations and other similar devices** For external power supplies, docking stations and other similar devices, during and after abnormal operating conditions and during single fault conditions the output voltage— – at all ES1 outlets or connectors shall not increase by more than 10% of its rated output voltage under normal operating condition; and – of a USB outlet or connector shall not increase by more than 3 V or 10% of its rated output voltage under normal operating conditions, whichever is higher. For equipment with multiple rated output voltages, the requirements apply with the equipment configured for each rated output voltage in turn. NOTE: This is intended to reduce the possibility of battery fire or explosion in attached equipment or accessories when charging secondary lithium batteries. *Compliance shall be checked by measurement, taking into account the abnormal* *operating conditions of Annex B.3 and the simulated single-fault conditions of Annex B.4*		P
6.202	**Resistance to fire—Alternative tests**		N/A
6.202.1	**General** Parts of non-metallic material shall be resistant to ignition and spread of fire. This requirement does not apply to decorative trims, knobs and other parts unlikely to be ignited or to propagate flames from inside the equipment, or the following: a) Components that are contained in an enclosure having a flammability category of V-0 according to AS/NZS 60695.11.10 and having openings only for the connecting wires filling the openings completely, and for ventilation not exceeding 1 mm in width regardless of length. b) The following parts which would contribute negligible fuel to a fire: – small mechanical parts, the mass of which does not exceed 4 g, such as mounting parts, gears, cams, belts and bearings; – small electrical components, such as capacitors with a volume not exceeding 1 750 mm3, integrated circuits, transistors and optocoupler packages, if these components are mounted on material of flammability category V-1, or better, according to AS/NZS 60695.11.10. NOTE: In considering how to minimize propagation of fire and what ‘small parts’ are, account should be taken of the cumulative effect of small parts adjacent to each other for the possible effect of propagating the fire from one part to another.		N/A

IEC 62368_1B ATTACHMENT			
Clause	Requirement + Test	Result - Remark	Verdict
	Compliance shall be checked by the tests of Clauses 6.202.2, 6.202.3 and 6.202.4. For the base material of printed boards, compliance shall be checked by the test of Clause 6.202.5. The tests shall be carried out on parts of non-metallic material which have been removed from the equipment. When the glow-wire test is carried out, the parts shall be placed in the same orientation as they would be in normal use. These tests are not carried out on internal wiring.		N/A
6.202.2	**Testing of non-metallic materials** Parts of non-metallic material shall be subject to the glow-wire test of AS/NZS 60695.2.11 which shall be carried out at 550°C. Parts for which the glow-wire test cannot be carried out, such as those made of soft or foamy material, shall meet the requirements specified in ISO 9772 for category FH-3 material. The glow-wire test shall be not carried out on parts of material classified at least FH-3 according to ISO 9772 provided that the relevant part is not thinner than the sample tested.		N/A
6.202.3	**Testing of insulating materials** Parts of insulating material supporting Potential Ignition Sources shall be subject to the glow-wire test of AS/NZS 60695.2.11 which shall be carried out at 750°C. The test shall be also carried out on other parts of insulating material which are within a distance of 3 mm of the connection. NOTE: Contacts in components such as switch contacts are considered to be connections		N/A
	For parts which withstand the glow-wire test but produce a flame, other parts above the connection within the envelope of a vertical cylinder having a diameter of 20 mm and a height of 50 mm shall be subjected to the needle-flame test. However, parts shielded by a barrier which meets the needle-flame test need not be tested		N/A
	The needle-flame test shall be made in accordance with AS/NZS 60695.11.5 with the following modifications: **Clause of AS/NZS 60695.11.5** — Change **9 Test procedure** **9.2 Application of needle-flame** — *Delete* the first and second paragraphs and *replace* with the following: The specimen shall be arranged so that		N/A

IEC 62368_1B ATTACHMENT			
Clause	Requirement + Test	Result - Remark	Verdict
	the flame can be applied to a vertical or horizontal edge as shown in the examples of Figure 1. If possible the flame shall be applied at least 10 mm from a corner. The duration of application of the test flame shall be 30 s □1 s. **9.3 Number of test specimens** *Replace* with the following: The test shall be made on one specimen. If the specimen does not withstand the test, the test may be repeated on two further specimens, both of which shall withstand the test. **11 Evaluation of test results** *Replace* with the following: The duration of burning (tb) shall not exceed 30 s. However, for printed circuit boards, it shall not exceed 15 s. The needle-flame test shall not be carried out on parts of material classified as V-0 or V-1 according to AS/NZS 60695.11.10, provided that the relevant part is not thinner than the sample tested.		
6.202.4	**Testing in the event of non-extinguishing material** If parts, other than enclosures, do not withstand the glow wire tests of Clause 6.202.3, by failure to extinguish within 30 s after the removal of the glow wire tip, the needle-flame test detailed in Clause 6.202.3 shall be made on all parts of non-metallic material which are within a distance of 50 mm or which are likely to be impinged upon by flame during the tests of Clause 6.202.3. Parts shielded by a separate barrier which meets the needle-flame test need not be tested. NOTE 1: If the enclosure does not withstand the glow-wire test the equipment is considered to have failed to meet the requirements of Clause 6.202 without the need for consequential testing.		N/A

IEC 62368_1B ATTACHMENT			
Clause	Requirement + Test	Result - Remark	Verdict
	NOTE 2: If other parts do not withstand the glow-wire test due to ignition of the tissue paper and if this indicates that burning or glowing particles can fall onto an external surface underneath the equipment, the equipment is considered to have failed to meet the requirements of Clause 6.202 without the need for consequential testing. NOTE 3: Parts likely to be impinged upon by the flame are considered to be those within the envelope of a vertical cylinder having a radius of 10 mm and a height equal to the height of the flame, positioned above the point of the material supporting, in contact with, or in close proximity to, connections.		
6.202.5	**Testing of printed boards** The base material of printed boards shall be subjected to the needle-flame test of Clause 6.202.3. The flame shall be applied to the edge of the board where the heat sink effect is lowest when the board is positioned as in normal use. The flame shall not be applied to an edge, consisting of broken perforations, unless the edge is less than 3 mm from a potential ignition source. The test is not carried out if— – the printed board does not carry any potential ignition source; – the base material of printed boards, on which the available apparent power at a connection exceeds 15 VA operating at a voltage exceeding 50 V and equal or less than 400 V (peak) a.c. or d.c. under normal operating conditions, is of flammability category V-1 or better according to AS/NZS 60695.11.10, or the printed boards are protected by an enclosure meeting the flammability category V-0 according to AS/NZS 60695.11.10, or made of metal, having openings only for connecting wires which fill the openings completely; or – the base material of printed boards, on which the available equipment power at a connection exceeds 15 VA operating at a voltage exceeding 400 V (peak) a.c. or d.c. under normal operating conditions, and base material of printed boards supporting spark gaps which provides protection against overvoltages, is of flammability category V-0 according to AS/NZS 60695.11.10 or the printed boards are contained in a metal enclosure, having openings only for connecting wires which fill the openings completely. *Conformance shall be determined using the smallest thickness of the material.* NOTE: Available apparent power is the maximum apparent power which can be drawn from the supplying circuit through a resistive load whose value is chosen to maximize the apparent power for more than 2 min when the circuit supplied is disconnected.		N/A
6.202.6	**For open circuit voltages greater than 4 kV** Potential ignition sources with open circuit voltages exceeding 4 kV (peak) a.c. or d.c. under normal operating conditions shall be contained in a FIRE ENCLOSURE which shall comply with		N/A

IEC 62368_1B ATTACHMENT			
Clause	Requirement + Test	Result - Remark	Verdict
	flammability category V-1 or better according to AS/NZS 60695.11.10.		
8.6.1.201	**8.6.1.201 Instructional safeguard for fixed-mount television sets** MS2 and MS3 television sets and display devices designed only for fixed mounting to a wall of ceiling or equipment rack shall, where required in Table 36, footnote 201, have an instructional safeguard in accordance with Clause F.5 which may be on the equipment or included in the installation instructions or equivalent document accompanying the equipment. The elements of the instructional safeguard shall be as follows: – element 1a: not available; – element 2: ‘Stability Hazard’ or equivalent wording; – element 3: ‘The television set may fall, causing serious personal injury or death’ or equivalent text; – element 4: the following or equivalent text: To prevent injury, this television set must be securely attached to the floor/wall in accordance with the installation instructions		N/A
8.6.1.202	**Restraining device** MS2 and MS3 television sets and display devices that are not solely fixed-mounted should be provided with a restraining device such as a fixing point to facilitate restraining the equipment from toppling forward. The restraining device shall be capable of withstanding a pull of 100 N in all directions without damage. Where a restraining device is provided, instructions shall be provided in the instructions for installation or instructions for use to ensure correct and safe installation.		N/A

Country	Canada
IECEE Member NCB	CSA International
IEC Standard	IEC 62368-1:2014 (Ed. 2.0)
Corresponding National Standard	CAN/CSA C22.2 No. 62368-1-14
Regulatory Requirements	N/A

CANADA NATIONAL DIFFERENCES			
Clause	Requirement + Test	Result - Remark	Verdict
1DV.1	Battery backup systems that are not an integral part of stationary equipment, such as provided in separate cabinets, are subject to the appropriate standard for battery backup systems, such as UL 1973, Batteries for Use in Light Electric Rail (LER) Applications and Stationary Applications.		N/A
1DV.2	For equipment intended for outdoor installation, additional requirements for Information and communication technology equipment are covered by CSA/UL 60950-22 and for Audio/video equipment are covered by the relevant requirements in CSA C22.2 No. 60065 or UL 60065.		N/A
1DV.3.1	Standard is applicable to equipment designed to be installed in accordance with the Canadian Electrical Code, Part I, C22.1-12; Canadian Electrical Code, Part II, General Requirements, CAN/CSA C22.2 No. 0-10; the National Electrical Code, NFPA 70-2014; and the National Electrical Safety Code, IEEE C2-2012.		P
1DV.3.2	For equipment designed to be installed in accordance with Article 645 of the National Electrical Code, NFPA 70-2014, and the Standard for the Protection of Information Technology Equipment, NFPA 75-2013, identification by a marking or instruction [see Annex DVK (Annex DVA, Clause 1)] is required.		N/A
1DV.3.3	Additional regulatory requirements that apply to this equipment per Annex DVA, as applicable.		N/A
1DV.4.1	Additional requirements for equipment used for entertainment purposes intended for installation in general patient care areas of health care facilities per Annex DVB.		N/A
1DV.4.2	This standard includes additional requirements for equipment intended for mounting under kitchen cabinets. See Annex DVC.		N/A

CANADA NATIONAL DIFFERENCES			
Clause	Requirement + Test	Result - Remark	Verdict
1DV.4.3	This standard does not apply to equipment having Remote Feeding Telecommunication (RFT) circuits. Equipment having RFT circuits is covered by CSA/UL 60950-21.		N/A
1DV.4.4	Additional requirements may apply to large data storage equipment. Refer to CSA/UL 60950-23.		N/A
1DV.4.5	Does not cover Modular Data Centers (MDCs) but only the information and communication technology equipment contained within.		N/A
1DV.5.1	Power Distribution Equipment and Sub-Assemblies		N/A
1DV.5.1.1	Power distribution sub-assemblies connected to a mains used to distribute power entirely within a system of equipment, such as power distribution units (PDUs), cord-connected power strips, shelves with multiple power outlets (receptacles) etc., and intended to be installed in system racks, cabinets, home entertainment centers, etc. are covered by this standard		N/A
1DV.5.1.2	For equipment covered by this standard that incorporates components and sub-assemblies that perform a power distribution and control function covered by other standards, such as panelboards, load transfer equipment, or uninterruptible power systems utilized in power conditioners and computer power centers, this standard only may be used for investigation of safety for those aspects not covered by the other standards.		N/A
1DV.5.1.3	This standard also does not apply to stand-alone equipment used for distribution of mains power that is covered by individual power distribution equipment standards.		N/A
1DV.5.1.4	Based on the specific function, the following requirements are applicable to the stand-alone distribution equipment, or apply additionally to power distribution sub-assemblies and components of equipment covered by this standard, as described in 1DV.5.1.2 and 1DV.5.1.3:		N/A
	– For Industrial Control Equipment, see CSA C22.2 No. 14 and UL 508.		N/A
	– For Panelboards, see CSA C22.2 No. 29 and UL 67.		N/A
	– For Switchboards, see CSA C22.2 No 244 and UL 891.		N/A

CANADA NATIONAL DIFFERENCES			
Clause	Requirement + Test	Result - Remark	Verdict
	– For Transfer Switch Equipment, see CSA C22.2 No 178.1 and UL 1008.		N/A
	– For Uninterruptible Power Systems, see CSA C22.2 No. 107.3 and UL 1778.		N/A
	– For Power Distribution Centers for Communications Equipment, see UL Subject 1801.		N/A
	– Other forms of power distribution units for general applications, such as, • Relocatable Power Taps, CSA-C22.2 No. 21, Cord Sets and Power Supply Cords, and UL 1363, Relocatable Power Taps. • Cord connected Surge Protective Devices, CSA Technical Information Letter No. A-24, Interim Certification Requirements for AC Line Connected Wiring Devices with Varistors, and UL 1449, Surge Protective Devices. • Furniture Power Distribution Units, CSA-C22.2 No. 21, Cord Sets and Power Supply Cords and UL 962A, Furniture Power Distribution Units.		N/A
3.3.1.2DV D2	For additional information regarding low voltage d.c. mains (centralized d.c. power systems) equipment, refer to Annex DVD. This standard covers high voltage d.c. mains up to 600 Vdc.		N/A
3.3.1.3DV. 1	New definition: telecommunication network – metallically terminated transmission medium intended for communication between equipment that may be located in separate buildings, excluding: – the mains system for supply, transmission and distribution of electrical power, if used as a telecommunication transmission medium; – cable distribution systems; – ES1 circuits connecting units of audio/video, information and communication technology equipment.		N/A

CANADA NATIONAL DIFFERENCES			
Clause	Requirement + Test	Result - Remark	Verdict
4.1.1DV.1 D2	In the U.S. and Canada, components and subassemblies that comply with the standards referenced in Annex DVE are required in addition to or as a replacement for the requirements in this standard. Components complying with these standards are considered acceptable as part of equipment covered by this standard without further evaluation other than to give consideration to the appropriate use of the component or subassembly in the end product.		P
4.1.1DV.2 DC	In the U.S. and Canada, components and subassemblies that comply with the standards referenced in Annex DVG are acceptable as an alternative to requirements as part of equipment covered by this standard without further evaluation other than to give consideration to the appropriate use of the component or subassembly in the end product.		P
4.1.2DV DC	In the U.S. and Canada, some UL/CSA component standards may be used as alternatives to referenced IEC standards for the purposes of North America certifications or surveillance programs. Components and subassemblies that comply with the standards referenced in Annex DVF are acceptable as part of equipment covered by this standard without further evaluation other than to give consideration to the appropriate use of the component or subassembly in the end product.		P
4.1.16DV.1	Mains connections		P
4.1.16DV.1 .1 DE, 4.1.16DV.1 .2 DR	Requirements for Mains Supply Cords for Pluggable (Cord Connected) Equipment (Canadian and U.S. regulatory based requirements) - Annex G.7 and G.7ADV	Supply cord not part of the product.	N/A
4.1.16DV.1 .3 D2, 4.1.16DV.1 .4 DR	Requirements for Permanently Connected Equipment. (Canadian and U.S. regulatory-based requirements) – Annex DVH		N/A
4.1.17DV.1	External interconnecting cable and wiring		P

CANADA NATIONAL DIFFERENCES			
Clause	Requirement + Test	Result - Remark	Verdict
4.1.17DV.1.1	General External interconnecting cable and wiring are investigated to the requirements of 6.5 and either 4.1.17DV.1.2 or 4.1.17DV.1.3, as appropriate.	Output cable complies with VW-1 or FT-1.	P
	– External interconnecting cable and wiring 3,05 m or less may be investigated as part of the equipment (system) to the requirements of this standard. See 4.1.17DV.1.2.		P
	– External interconnect cable and wiring longer than 3,05 m are regulated by the Canadian Electrical Code, C22.1, and the National Electrical Code, NFPA 70, and are subject to associated requirements. See 4.1.17DV.1.3.		N/A
	– External interconnect cable longer than 3,05 m designed to carry audio and/or video signals only, and that is not specified by the manufacturer to be routed inside the building structure (e.g., walls, ceilings, etc.), is subject to the applicable requirements of 4.1.17DV.1.2. For purposes of 4.1.17DV.1.2, it is assumed such cables are connected to PS1 circuits.		N/A
	Alternatively, detachable external interconnecting cable and wiring (with terminations) may be excluded from the equipment evaluation if specified by the manufacturer.		N/A
4.1.17DV.1.2	Equipment (system) interconnecting cable and wiring		P
	The following requirements apply to detachable and nondetachable external interconnecting cable and wiring investigated as part of the equipment (system).		N/A
	– The length of the external interconnecting cable or wiring shall not exceed 3,05 m;		N/A
	– For external interconnecting cable and wiring connected to PS2 and PS3 circuits, see 6.5 for fire (flammability) considerations;		P
	– There are no fire (flammability) considerations for external interconnecting cable and wiring specified by the manufacturer for connection to circuits that are PS1.		N/A
	– External interconnecting cable and wiring intended to be connected to an ES3 or PS3 circuit require a jacket for mechanical protection in accordance with Table G.7ADV.2, or equivalent;		N/A

CANADA NATIONAL DIFFERENCES			
Clause	Requirement + Test	Result - Remark	Verdict
	– Detachable external interconnecting cable and wiring (with terminations) intended to be connected to a PS2, PS3, ES2 or ES3 circuit and furnished as part of the equipment shall be either marked, or similarly identified in the installation instructions with (a) the name, trademark or trade name of the organization that is responsible for the equipment, and (b) the organization's identifying number or equivalent designation for the cable. See Annex DVK. – The marking may be applied on the cable and wiring at any location – This marking is not required to comply with the test for permanence of markings, F.3.9	Not detachable.	N/A
	Optical fiber interconnecting cables 3,05 m or less are not subject to the above requirements		N/A
4.1.17DV.1.3	External interconnecting cable and wiring considered part of the building installation.		N/A
	External interconnecting cables and wiring longer than 3,05 m are regulated by the Canadian Electrical Code, C22.1, and the National Electrical Code, NFPA 70. See Annex DVA(Annex Q entry).		N/A
4.6.2DVD2	Additional examples of compliance: - wire-wrap terminals used for the connection of ES1 and ES2 that are: • provided on equipment that forms part of the telecommunication network, up to and including the demarcation point, and are located in service access areas only. (This equipment is generally considered Central Office Equipment, although it may be deployed elsewhere in similarly controlled environments.) and • provided with a guard or cover that prevents unintentional contact during normal operation. are tested with a steady force of 2,5 N ± 0,25 N.	No wire-wrap terminal used.	N/A
4.8.3DVD2	If screws or similar fasteners are used to secure the door/cover providing access to the battery compartment, the fasteners shall be captive to ensure that they remain with the door/cover. This does not apply to side panel doors on larger devices which are necessary for the functioning of the equipment and which are not likely to be discarded or left off the equipment	No battery compartment.	N/A

CANADA NATIONAL DIFFERENCES			
Clause	Requirement + Test	Result - Remark	Verdict
4.8.4.5DV D2	0,5 J impact test deleted.		N/A
4.8.5DV.1 D2	Replace 30 N battery compartment door/cover test with 45 N		N/A
4.8.5DV.2 D2	Additional compliance criteria replaced with: - the battery compartment door/cover shall not open; and - the battery shall not become accessible		N/A
5.4.4.1DV D1	For printed boards, see Clause G.13		P
	For antenna terminals, see Clause 5.4.5		N/A
	For solid insulation on internal and external wiring, see Clause G.6.		P
	Additionally, for internal wiring accessible to an ordinary person, see Clause 5.4.6.	No internal wiring accessible to ordinary person.	N/A
5.6.3DV.1 DR to 5.6.3DV.3 DR	Protective earthing conductors shall comply with the minimum conductor sizes in Table G.5, except as required by • Table G.7ADV.1 for cord connected equipment; or • Annex DVH for permanently connected equipment.	Power supply cord not part of the unit.	N/A
5.6.4.1DV DR	Minimum conductor size alternative compliance to Table G.5 or Table G.7ADV.1 as applicable, or Table 31 Minimum protective bonding conductor size of copper conductors	For Class I model only. N/A for Class II model.	P
5.6.4.4DV DR	Protective bonding conductor sizes alternative compliance to Table G.7ADV.1 in addition to Table 31 or Table G.5		N/A
Table 32 DV DR	Include alternative conductor size compliance with Table G.7ADV.1 in the first column heading for protective conductor terminals.		N/A
5.6.6.1 DV DR	Protective bonding conductors that meet the minimum conductor sizes in Table G.5 or Table G.7ADV.1 as applicable, throughout their length and whose terminals all meet the minimum sizes in Table 32 are considered to comply without test.		N/A
5.7.6.2DV DE	Clause title modified to read “Prospective touch voltage and touch current to external circuits”		N/A
5.7.7DV.1 D2	Clause 5.7.7 to apply to stationary pluggable equipment type A or pluggable equipment type B		N/A

CANADA NATIONAL DIFFERENCES			
Clause	Requirement + Test	Result - Remark	Verdict
5.7.7DV.2 D2	Summation of touch currents not exceeding the limits of ES2 exception per Clause 5.7.7(a)(1)		N/A
5.7.7DV.3 D2	Clause 5.7.7(a)(2) replaced with: Such equipment shall comply with Clause 5.7.5. The value of S(I1) shall be added to the measured protective conductor current to determine compliance with the 5 % input current limit per phase specified in Clause 5.7.5.		N/A
5.7.7.1DV D2	Limitation of touch current due to ringing signals Equipment containing input telecommunication network leads over which ringing voltages are applied to the equipment shall be tested using the circuit of Figure 5.7.7.1DV.1 for mains-connected equipment or Figure 5.7.7.1DV.2 for other equipment. For any position of the selector switches, the total touch current including consideration of 5.7.7 shall not exceed the relevant limits for ES2 specified in Table 4, unless the equipment complies with 5.7.7(a) with the protective conductor current due to ringing signal taken into account. An EUT that receives ringing voltages on up to three telecommunication network connection ports shall have simulated ringing applied to each network connection. For four or more ports receiving ringing, simulated ringing shall be applied to three ports and an additional 3 % (rounding down) of the remaining ports. Compliance is checked by the following tests, which are conducted using the measuring network described in IEC 60990, Figure 4. Simulated ringing at 120 V, 50 to 60 Hz, shall be applied to ringing input telecommunication network leads, either one lead at a time or connected together. Other telecommunication network leads shall be left disconnected. Equipment shall be evaluated in each operating state, including ground start. The general test methods of 5.7 shall apply, checking touch current for all positions of switches S1, S2, and S3 in Figure 5.7.7.1DV.1. In case the total touch current exceeds the ES2 limits, the protective conductor current is measured using the test set up of Figure 5.7.7.1DV.1 or Figure 5.7.7.1DV.2 with the measuring instrument replaced with an ammeter having negligible impedance.		N/A

CANADA NATIONAL DIFFERENCES			
Clause	Requirement + Test	Result - Remark	Verdict
6.5.1DV.1 DC	Add the following text to the end of the second, third and fourth paragraphs: or the insulation of the conductor or cable assembly shall be rated VW-1 or FT-1.		P
6.5.1DV.2 D2	Add the following after the third paragraph: PS3 wiring outside a fire enclosure shall comply with single fault testing in B.4. Alternatively, the following constructions are considered to comply: – conductors provided with overcurrent protection in accordance with Article 240 of the National Electrical Code, NFPA 70, and the Canadian Electrical Code, Part I, C22.1, Section 14; – internal conductors supplied by a power source that is limited to the output voltage and current values specified in Table Q.1 or is limited to the output voltage values and provided with an overcurrent protective device with a rated current value as specified in Table Q.2; – interconnecting cables supplied by a limited power source (see Q.1); – a 20-A protective device used with any size wire in the primary.		N/A
6.7DV.1	Safeguards against electrically-caused fire due to overvoltage from power line crosses		N/A
6.7DV.1.1	Equipment with external circuits intended for connection to a telecommunication network that uses outside cable subject to overvoltage from power line failures shall comply with Annex DVI.		N/A
10.6.1DV D2	For telecommunication-network connected equipment, see Annex DVJ.		N/A
F.1DV DR	F.1DV.1 See Annex DVK for U.S. and Canadian markings and instructions.		N/A
F.3.3.9DV. 1	Equipment with output terminals Output terminals provided for supply of other equipment except mains supply shall be marked with the nominal output voltage and frequency, and, in addition, the maximum output current or power, unless the terminals are marked with the type references of the equipment which are permitted to be connected. When intended to be installed or interconnected in the field by a skilled person, the Class of wiring shall be marked adjacent to the terminals.		N/A
G.4.3DV D2	Delete the 2nd sentence reference to “banana plug” of the EXAMPLE.		N/A

CANADA NATIONAL DIFFERENCES			
Clause	Requirement + Test	Result - Remark	Verdict
G.7.2DV DR	In the second paragraph, replace the reference to Table G.4 with a reference to Table G.7ADV.1.		N/A
G.7ADV DR	Additional requirements: Power supply cords – detachable and non-detachable		N/A
G.7ADV.1	General Flexible cords and plugs are permitted for movable equipment, hand-held equipment, stationary equipment and transportable equipment, and for fixed equipment where the fastening means and mechanical connections of the equipment are designed to permit removal for maintenance and repair.		N/A
G.7ADV.2	Methods of connection Flexible cords shall be provided with an attachment plug for connection to the branch circuit.		N/A
G.7ADV.3	Sizing and ratings The attachment plug configuration shall be one that is rated not less than 125 percent of the current rating of the equipment.		N/A
	Power supply cords shall have conductors with cross-sectional areas sufficient for the rated current of the equipment. Conductors shall be sized based on the requirements in the National Electrical Code (NEC), NFPA 70, and the Canadian Electrical Code, Part I, C22.1.		N/A
	Table G.7ADV.1 provides allowable ampacity for flexible cords and cables based on Table 400.5(a)(1) of the NEC. See Table 400.5(a)(2) of the NEC for ampacity information on portable power cables.		N/A
	For equipment with a rated current up to and including 2 A, 20 AWG is acceptable provided that the mains plug is provided with a 2 A fuse maximum and the equipment is not provided with a socket outlet.		N/A
G.7ADV.4	Serviceability Power supply cords and cord sets shall incorporate flexible cords suitable for the particular application or shall be of a type at least as serviceable for the particular application. Table G.7ADV.2 lists common applications and associated suitable cord types.		N/A

CANADA NATIONAL DIFFERENCES			
Clause	Requirement + Test	Result - Remark	Verdict
G.7ADV.5.1	Minimum length The minimum length of a power supply cord shall be 1,5 m unless it is intended for a special installation, such as dedicated equipment intended to be mounted near a mains socket-outlet.		N/A
	For equipment provided with an external power supply, the minimum length of the power supply cord shall be 0,5 m, provided that the total length of the conductive path from the receptacle to the equipment is 1,5 m or greater.		N/A
G.7ADV.5.2	Maximum length For equipment intended for installation in ITE Rooms, the length of a power supply cord shall not exceed 4,5 m. For other intended installations, see Table G.7ADV.2.		N/A
H.2DV D2	item a: Continuous ringing signals shall: • be located only in areas where a skilled person has access during servicing; • be so located and guarded that unintentional contact with such parts is unlikely during servicing by a skilled person, or be provided with a marking to warn a skilled person of the presence of continuous ringing signals; and • not become accessible to an ordinary person under single fault conditions.		N/A
H.4DV.1	Other telecommunication signals: Telecommunication signaling systems (e.g., some message waiting systems) using voltages or current, or both, greater than those specified in 5.2.1.1 and 5.2.1.2 shall be permitted if they comply with the following:		N/A
	– continuous signal: For a signal of duration greater than 5 s, the current through the relevant measuring instrument described in IEC 60990:1999, Figure 4, shall be not greater than 7.1 mA peak a.c., or 30 mA d.c., or the limit shown in Figure H.4DV.1 for combinations of a.c. and d.c., when measured in accordance with 5.7.		N/A

CANADA NATIONAL DIFFERENCES			
Clause	Requirement + Test	Result - Remark	Verdict
	– intermittent signal: For a signal of duration less than 5 s, the current through the relevant measuring instrument described in IEC 60990:1999, Figure 4, shall be not greater than the limit specified in Figure H.4DV.2. The signal shall be followed by a quiet interval of at least 1 s before the next intermittent signal. During the quiet interval, either the voltage is less than 56,6 V d.c., or the current measured is less than 0,5 mA.		N/A
M.2.1DV DC	Battery packs with sealed secondary cells and batteries (other than button) containing alkaline or other non-acid electrolyte and used in stationary equipment shall comply with either IEC 62133, UL 2054 or UL 1973. Additionally, such battery packs that rely on solid-state circuits and software controls as safeguards shall comply with either the requirements in UL 1973 for System Safety Analysis (5.7) and Protective Circuit and Controls (5.8), or similar requirements in an appropriate standard for electronic safety-related controls that are suitable for investigation of such protection of secondary cells and batteries.		N/A
P.4.1DV DE	Additional text added to correct for editing error: For metalized coatings, clearances and creepage distances for pollution degree 3 shall be maintained instead of the tests of P.4.2DV.1.		N/A
P.4.2DV DE	Added test requirements text from Clause P.5 as new Clause P.4.2DV DE to correct for editing error.		N/A
P.5DV DE	Clause P.5 relocated to P.4.1 and P.4.2		N/A
U.1DV D1	Added the following text: The outer enclosure housing a CRT shall have no opening that exceeds 130 mm2 unless the minor dimension of the opening is 10 mm or less.		N/A

CANADA NATIONAL DIFFERENCES			
Clause	Requirement + Test	Result - Remark	Verdict
Table W.3DV DE	Modify Table W.3 by replacing the entry for 1.2.8.14 in the first column with the following to correct a typographical error: **TNV-3 CIRCUIT** **TNV CIRCUIT** **– whose normal operating voltages exceed the limits for an SELV circuit under normal operating conditions and** **– on which overvoltages from telecommunication networks and cable distribution systems are possible**		N/A
Annex DVA	(normative) Canadian and U.S. regulatory-based requirements		N/A
Annex DVB	(normative) Equipment used in health care facilities		N/A
Annex DVC	(normative) Under kitchen cabinet equipment		N/A
Annex DVD	(informative) D.C. powered equipment and centralized d.c. power systems (DC mains)		N/A
Annex DVE	(normative) UL and CSA component requirements (mandatory)		N/A
Annex DVF	(normative) UL and CSA component requirements (alternative to IEC standards)		N/A
Annex DVG	(normative) UL and CSA component requirements (alternative)		N/A
Annex DVH	(normative) Permanently connected equipment – mains connections		N/A
Annex DVI	(normative) Safeguards against electrically-caused fire due to overvoltage from power line crosses		N/A
Annex DVJ	(normative) Acoustic tests for telecommunications equipment		N/A
Annex DVK	(normative) Canadian and U.S. marking and instructions		N/A

Country	Denmark
IECEE Member NCB	UL (Demko)
IEC Standard	IEC 62368-1:2014 (Ed. 2.0)
Corresponding National Standard	DS/EN 62368-1:2014
Regulatory Requirements	N/A

DENMARK NATIONAL DIFFERENCES			
Clause	Requirement + Test	Result - Remark	Verdict
Various	Please see the EN version of the standard where the Denmark National and Special National Deviations are stated.		—

Country	European Group Differences and National Differences
IECEE Member NCB	--
IEC Standard	IEC 62368-1:2014 (Ed. 2.0)
Corresponding National Standard	EN 62368:2014 + A11:2017
Regulatory Requirements	N/A

GROUP DIFFERENCES (CENELEC common modifications EN)			
Clause	Requirement + Test	Result - Remark	Verdict
Contents	Add the following annexes: Annex ZA (normative) — Normative references to international publications with their corresponding European publications Annex ZB (normative) — Special national conditions Annex ZD (informative) — A-deviations Annex ZD (informative) — IEC and CENELEC code designations for flexible cords		P
General	**Delete** all the "country" notes in the reference document according to the following list:		P

0.2.1	Note	1	Note 3	4.1.15	Note
4.7.3	Note 1 and 2	5.2.2.2	Note	4.5.2.3.2.2 Table 13	Note c
5.4.2.3.2.4	Note 1 and 3	5.4.2.5	Note 2	5.4.5.1	Note
5.5.2.1	Note	5.5.6	Note	5.6.4.2.1	Note 2 and 3
5.7.5	Note	5.7.6.1	Note 1 and 2	10.2.1 Table 39	Note 2,3 and 4
10.5.3	Note 2	10.6.2.1	Note 3	F3.3.6	Note 3

For special national conditions, see Annex ZB.

1	**Add** the following note: NOTE Z1 The use of certain substances in electrical and electronic equipment is restricted within the EU: see Directive 2011/65/EU.		P
4.Z1	**Add** the following new subclause after 4.9: To protect against excessive current, short-circuits and earth faults in circuits connected to an a.c. mains, protective devices shall be included either as integral parts of the equipment or as parts of the building installation, subject to the following, a), b) and c): a) except as detailed in b) and c), protective devices necessary to comply with the requirements of B.3.1 and B.4 shall be included as parts of the equipment;		P
	b) for components in series with the mains input		N/A

GROUP DIFFERENCES (CENELEC common modifications EN)			
Clause	Requirement + Test	Result - Remark	Verdict
	to the equipment such as the supply cord, appliance coupler, r.f.i. filter and switch, short-circuit and earth fault protection may be provided by protective devices in the building installation;		
	c) it is permitted for **pluggable equipment type B** or **permanently connected** equipment, to rely on dedicated overcurrent and short-circuit protection in the building installation, provided that the means of protection, e.g. fuses or circuit breakers, is fully specified in the installation instructions.		N/A
	If reliance is placed on protection in the building installation, the installation instructions shall so state, except that for **pluggable equipment type A** the building installation shall be regarded as providing protection in accordance with the rating of the wall socket outlet.		N/A
5.4.2.3.2.4	**Add** the following to the end of this subclause: The requirement for interconnection with external circuit is in addition given in EN 50491-3:2009.		N/A
10.2.1	**Add** the following to c) and d) in Table 39: For additional requirements, see 10.5.1.		N/A
10.5.1	Add the following after the first paragraph: For RS 1 compliance is checked by measurement under the following conditions: In addition to the normal operating conditions, all controls adjustable from the outside by hand, by any object such as a tool or a coin, and those internal adjustments or presets which are not locked in a reliable manner, are adjusted so as to give maximum radiation whilst maintaining an intelligible picture for 1 h, at the end of which the measurement is made. NOTE Z1 Soldered joints and paint lockings are examples of adequate locking. The dose-rate is determined by means of a radiation monitor with an effective area of 10 cm², at any point 10 cm from the outer surface of the apparatus. Moreover, the measurement shall be made under fault conditions causing an increase of the high-voltage, provided an intelligible picture is maintained for 1 h, at the end of which the measurement is made. For RS1, the dose-rate shall not exceed 1 µSv/h taking account of the background level. NOTE Z2 These values appear in Directive		N/A

GROUP DIFFERENCES (CENELEC common modifications EN)			
Clause	Requirement + Test	Result - Remark	Verdict
	96/29/Euratom of 13 May 1996.		
10.6.2.1	Add the following paragraph to the end of the subclause: EN 71-1:2011, 4.20 and the related tests methods and measurement distances apply.		N/A
10.Z1	**Add** the following new subclause after 10.6.5. **10.Z1 Non-ionizing radiation from radio frequencies in the range 0 to 300 GHz** The amount of non-ionizing radiation is regulated by European Council Recommendation 1999/519/EC of 12 July 1999 on the limitation of exposure of the general public to electromagnetic fields (0 Hz to 300 GHz). For intentional radiators, ICNIRP guidelines should be taken into account for Limiting Exposure to Time-Varying Electric, Magnetic, and Electromagnetic Fields (up to 300 GHz). For hand-held and body-mounted devices, attention is drawn to EN 50360 and EN 50566.		N/A
G.7.1	**Add** the following note: NOTE Z1 The harmonized code designations corresponding to the IEC cord types are given in Annex ZD.		N/A
Bibliography	Additional EN standards.		—

ZA	**Normative references to international publications with their corresponding European publications**	—

ZB	**Special National Conditions**		—
4.1.15	**Denmark, Finland, Norway and Sweden** To the end of the subclause the following is added: **Class I pluggable equipment type A** intended for connection to other equipment or a network shall, if safety relies on connection to reliable earthing or if surge suppressors are connected between the network terminals and **accessible** parts, have a marking stating that the equipment shall be connected to an earthed **mains** socket-outlet. The marking text in the applicable countries shall be as follows: In **Denmark**: “Apparatets stikprop skal tilsluttes en stikkontakt med jord som giver forbindelse til		N/A

GROUP DIFFERENCES (CENELEC common modifications EN)			
Clause	Requirement + Test	Result - Remark	Verdict
	stikproppens jord.” In **Finland**: "Laite on liitettävä suojakoskettimilla varustettuun pistorasiaan" In **Norway**: “Apparatet må tilkoples jordet stikkontakt” In **Sweden**: “Apparaten skall anslutas till jordat uttag”		
4.7.3	**United Kingdom** To the end of the subclause the following is added: The torque test is performed using a socket-outlet complying with BS 1363, and the plug part shall be assessed to the relevant clauses of BS 1363. Also see Annex G.4.2 of this annex		N/A
5.2.2.2	**Denmark** After the 2nd paragraph add the following: A warning (marking **safeguard**) for high **touch current** is required if the **touch current** exceeds the limits of 3,5 mA a.c. or 10 mA d.c.		N/A
5.4.11.1 And Annex G	**Finland and Sweden** To the end of the subclause the following is added: For separation of the telecommunication network from earth the following is applicable: If this insulation is solid, including insulation forming part of a component, it shall at least consist of either • two layers of thin sheet material, each of which shall pass the electric strength test below, or • one layer having a distance through insulation of at least 0,4 mm, which shall pass the electric strength test below. If this insulation forms part of a semiconductor component (e.g. an optocoupler), there is no distance through insulation requirement for the insulation consisting of an insulating compound completely filling the casing, so that clearances and creepage distances do not exist, if the component passes the electric strength test in accordance with the compliance clause below and in addition • passes the tests and inspection criteria of 5.4.8 with an electric strength test of 1,5 kV multiplied by 1,6 (the electric strength test of 5.4.9 shall be performed using 1,5 kV), and		N/A

GROUP DIFFERENCES (CENELEC common modifications EN)			
Clause	Requirement + Test	Result - Remark	Verdict
	• is subject to routine testing for electric strength during manufacturing, using a test voltage of 1,5 kV. It is permitted to bridge this insulation with a capacitor complying with EN 60384-14:2005, subclass Y2. A capacitor classified Y3 according to EN 60384-14:2005, may bridge this insulation under the following conditions: • the insulation requirements are satisfied by having a capacitor classified Y3 as defined by EN 60384-14, which in addition to the Y3 testing, is tested with an impulse test of 2,5 kV defined in 5.4.11; • the additional testing shall be performed on all the test specimens as described in EN 60384-14; the impulse test of 2,5 kV is to be performed before the endurance test in EN 60384-14, in the sequence of tests as described in EN 60384-14.		
5.5.2.1	**Norway** After the 3rd paragraph the following is added: Due to the IT power system used, capacitors are required to be rated for the applicable line-to-line voltage (230 V).		N/A
5.5.6	**Finland, Norway** and **Sweden** To the end of the subclause the following is added: Resistors used as **basic safeguard** or bridging **basic insulation** in c**lass I pluggable equipment type A** shall comply with G.10.1 and the test of G.10.2.		N/A
5.6.1	**Denmark** **Add** to the end of the subclause Due to many existing installations where the socket-outlets can be protected with fuses with higher rating than the rating of the socket-outlets the protection for pluggable equipment type A shall be an integral part of the equipment. *Justification:* In Denmark an existing 13 A socket outlet can be protected by a 20 A fuse.		N/A
5.6.4.2.1	**Ireland and United Kingdom** After the indent for **pluggable equipment type**		N/A

GROUP DIFFERENCES (CENELEC common modifications EN)			
Clause	Requirement + Test	Result - Remark	Verdict
	A, the following is added: – the **protective current rating** is taken to be 13 A, this being the largest rating of fuse used in the **mains** plug.		
5.6.5.1	To the second paragraph the following is added: The range of conductor sizes of flexible cords to be accepted by terminals for equipment with a rated current over 10 A and up to and including 13 A is: 1,25 mm^2 to 1,5 mm^2 in cross-sectional area.		N/A
5.7.5	**Denmark** To the end of the subclause the following is added: The installation instruction shall be affixed to the equipment if the **protective conductor current** exceeds the limits of 3,5 mA a.c. or 10 mA d.c.		N/A
5.7.6.1	**Norway and Sweden** To the end of the subclause the following is added: The screen of the television distribution system is normally not earthed at the entrance of the building and there is normally no equipotential bonding system within the building. Therefore the protective earthing of the building installation needs to be isolated from the screen of a cable distribution system. It is however accepted to provide the insulation external to the equipment by an adapter or an interconnection cable with galvanic isolator, which may be provided by a retailer, for example. The user manual shall then have the following or similar information in Norwegian and Swedish language respectively, depending on in what country the equipment is intended to be used in: “Apparatus connected to the protective earthing of the building installation through the mains connection or through other apparatus with a connection to protective earthing – and to a television distribution system using coaxial cable, may in some circumstances create a fire hazard. Connection to a television distribution system therefore has to be provided through a device providing electrical isolation below a certain frequency range (galvanic isolator, see EN 60728-11)” NOTE In Norway, due to regulation for CATV-installations, and in Sweden, a galvanic isolator shall provide electrical		N/A

GROUP DIFFERENCES (CENELEC common modifications EN)			
Clause	Requirement + Test	Result - Remark	Verdict
	insulation below 5 MHz. The insulation shall withstand a dielectric strength of 1,5 kV r.m.s., 50 Hz or 60 Hz, for 1 min. Translation to Norwegian (the Swedish text will also be accepted in Norway): “Apparater som er koplet til beskyttelsesjord via nettplugg og/eller via annet jordtilkoplet utstyr – og er tilkoplet et koaksialbasert kabel-TV nett, kan forårsake brannfare. For å unngå dette skal det ved tilkopling av apparater til kabel-TV nett installeres en galvanisk isolator mellom apparatet og kabel-TV nettet.” Translation to Swedish: ”Apparater som är kopplad till skyddsjord via jordat vägguttag och/eller via annan utrustning och samtidigt är kopplad till kabel-TV nät kan i vissa fall medfőra risk főr brand. Főr att undvika detta skall vid anslutning av apparaten till kabel-TV nät galvanisk isolator finnas mellan apparaten och kabel-TV nätet.”.		
5.7.6.2	**Denmark** To the end of the subclause the following is added: The warning (marking safeguard) for high touch current is required if the touch current or the protective current exceed the limits of 3,5 mA.		N/A
B.3.1 and B.4	**Ireland and United Kingdom** The following is applicable: To protect against excessive currents and short-circuits in the primary circuit of **direct plug-in equipment**, tests according to Annexes B.3.1 and B.4 shall be conducted using an external miniature circuit breaker complying with EN 60898-1, Type B, rated 32A. If the equipment does not pass these tests, suitable protective devices shall be included as an integral part of the **direct plug-in equipment**, until the requirements of Annexes B.3.1 and B.4 are met		N/A
G.4.2	**Denmark** To the end of the subclause the following is added: Supply cords of single phase appliances having a rated current not exceeding 13 A shall be provided with a plug according to DS 60884-2-D1:2011. CLASS I EQUIPMENT provided with socket-outlets with earth contacts or which are intended		N/A

GROUP DIFFERENCES (CENELEC common modifications EN)			
Clause	Requirement + Test	Result - Remark	Verdict
	to be used in locations where protection against indirect contact is required according to the wiring rules shall be provided with a plug in accordance with standard sheet DK 2-1a or DK 2-5a. If a single-phase equipment having a RATED CURRENT exceeding 13 A or if a poly-phase equipment is provided with a supply cord with a plug, this plug shall be in accordance with the standard sheets DK 6-1a in DS 60884-2-D1 or EN 60309-2. Mains socket outlets intended for providing power to Class II apparatus with a rated current of 2,5 A shall be in accordance DS 60884-2-D1:2011 standard sheet DKA 1-4a. Other current rating socket outlets shall be in compliance with Standard Sheet DKA 1-3a or DKA 1-1c. Mains socket-outlets with earth shall be in compliance with DS 60884-2-D1:2011 Standard Sheet DK 1-3a, DK 1-1c, DK1-1d, DK 1-5a or DK 1-7a *Justification:* Heavy Current Regulations, Section 6c		
G.4.2	**United Kingdom** To the end of the subclause the following is added: The plug part of direct plug-in equipment shall be assessed to BS 1363: Part 1, 12.1, 12.2, 12.3, 12.9, 12.11, 12.12, 12.13, 12.16, and 12.17, except that the test of 12.17 is performed at not less than 125 °C. Where the metal earth pin is replaced by an Insulated Shutter Opening Device (ISOD), the requirements of clauses 22.2 and 23 also apply.		N/A
G.7.1	**United Kingdom** To the first paragraph the following is added: Equipment which is fitted with a flexible cable or cord and is designed to be connected to a mains socket conforming to BS 1363 by means of that flexible cable or cord shall be fitted with a 'standard plug' in accordance with the Plugs and Sockets etc (Safety) Regulations 1994, Statutory Instrument 1994 No. 1768, unless exempted by those regulations. NOTE "Standard plug" is defined in SI 1768:1994 and essentially means an approved plug conforming to BS 1363 or an approved conversion plug.		N/A

GROUP DIFFERENCES (CENELEC common modifications EN)			
Clause	Requirement + Test	Result - Remark	Verdict
G.7.1	**Ireland** To the first paragraph the following is added: Apparatus which is fitted with a flexible cable or cord shall be provided with a plug in accordance with Statutory Instrument 525: 1997, “13 A Plugs and Conversion Adapters for Domestic Use Regulations: 1997. S.I. 525 provides for the recognition of a standard of another Member State which is equivalent to the relevant Irish Standard		N/A
G.7.2	**Ireland and United Kingdom** To the first paragraph the following is added: A power supply cord with a conductor of 1,25 mm^2 is allowed for equipment which is rated over 10 A and up to and including 13 A.		N/A
ZC	**A-deviations**		—
	A-deviation: National deviation due to regulations, the alteration of which is for the time being outside the competence of the CEN/CENELEC national member. This European Standard falls under Directive 2006/95/EC. NOTE (from CEN/CENELEC IR Part 2:2011, 2.17): Where standards fall under EU Directives, it is the view of the Commission of the European Communities (OJ No C 59; 1982-03-09) that the effect of the decision of the Court of Justice in case 815/79 Cremonini/Vrankovich (European Court Reports 1980, p. 3583) is that compliance with A-deviations is no longer mandatory and that the free movement of products complying with such a standard should not be restricted except under the safeguard procedure provided for in the relevant Directive. A-deviations in an EFTA-country are **valid instead** of the relevant provisions of the European Standard in that country until they have been removed.		—
10.5.2	**Germany** The following requirement applies: For the operation of any cathode ray tube intended for the display of visual images operating at an acceleration voltage exceeding 40 kV, authorization is required, or application of type approval (Bauartzulassung) and marking. *Justification:* German ministerial decree against ionizing radiation (Röntgenverordnung), in force since 2002-07-01, implementing the European Directive 96/29/EURATOM. NOTE Contact address: Physikalisch-Technische Bundesanstalt, Bundesallee 100, D-38116 Braunschweig, Tel.: Int+49-531-592-6320, Internet: http://www.ptb.de		N/A

Annex ZD (informative) IEC and CENELEC code designations for flexible cords		
Type of flexible cord	Code designations	
	IEC	CENELEC
PVC insulated cords		
Flat twin tinsel cord	60227 IEC 41	H03VH-Y
Light polyvinyl chloride sheathed flexible cord	60227 IEC 52	H03VV-F H03VVH2-F
Ordinary polyvinyl chloride sheathed flexible cord	60277 IEC 53	H05VV-F H05VVH2-F
Rubber insulated cords		
Braided cord	60245 IEC 51	H03RT-F
Ordinary tough rubber sheathed flexible cord	60245 IEC 53	H05RR-F
Ordinary polychloroprene sheathed flexible cord	60245 IEC 57	H05RN-F
Heavy polychloroprene sheathed flexible cord	60245 IEC 66	H07RN-F
Cords having high flexibility		
Rubber insulated and sheathed cord	60245 IEC 86	H03RR-H
Rubber insulated, crosslinked PVC sheathed cord	60245 IEC 87	H03RV4-H
Crosslinked PVC insulated and sheathed cord	60245 IEC 88	H03V4V4-H
Cords insulated and sheathed with halogen-free thermoplastic compounds		
Light halogen-free thermoplastic insulated and sheathed flexible cords		H03Z1Z1-F H03Z1Z1H2-F
Ordinary halogen-free thermoplastic insulated and sheathed flexible cords		H05Z1Z1-F H05Z1Z1H2-F

Country	Italy
IECEE Member NCB	IMQ S.p.A.
IEC Standard	IEC 62368-1:2014 (Ed. 2.0)
Corresponding National Standard	CEI EN 62368-1:2016
Regulatory Requirements	N/A

ITALY NATIONAL DIFFERENCES			
Clause	Requirement + Test	Result - Remark	Verdict
Various	Please see the EN version of the standard where the Italian National and Special National Deviations are stated.		—

Country	Japan
IECEE Member NCB	IECEE-JP
IEC Standard	IEC 62368-1:2014 (Ed. 2.0)
Corresponding National Standard	J62368-1 (H30)
Regulatory Requirements	Electrical Appliances and Materials Safety Act Article 8, 9 and Appendix 12

Clause and Sub-clause	**Exact wording** Requirement + Test	Result - Remark	Verdict
3.3.15.1	Add the following new note after Note 2 to entry. Note 3 to entry: See 3.3.15.4A for class I equipment, when 2-pin adaptor with earthing lead wire or cord set having 2-pin plug with earthing lead wire is provided or recommended.		N/A
3.3.15.4A	Add the following new clause after 3.3.15.4. 3.3.15.4A Class 0I equipment Equipment having attachment plug without earthing blade, where protection against electric shock is achieved by using basic insulation and providing the protective earthing terminal or earthing lead wire in order to connect accessible conductive parts to the protective earthing conductor in the building wiring as supplementary safeguard. The above includes the equipment provided with, or recommend user to use the accessory of 2-pin plug adaptor with protective earthing lead wire that adapts class I (earthed) plug into 2-pin		N/A

	plug or power supply cord set having 2-pin plug with earthing lead wire. Note 1 to entry: Class 0I equipment may have a part constructed with Class II.		
4.1.2	Modify the first paragraph as follows: Where the component, or a characteristic of a component, is a safeguard or a part of a safeguard, components shall comply with the requirements of this standard or, where specified in a requirements clause, with the safety aspects of the relevant JIS component standards or IEC component standards, or components shall have properties equivalent to or better than these. Add the following Note before Note 1 NOTE 0A Components complying with the interpretation of Ministerial Ordinance on stipulating technical requirements for the Electrical Appliance is regarded to have equivalent to or better properties.		N/A
4.1.3	Add the following Note before the compliance statement: NOTE Considering the wiring circumstance in Japan, transportable or similar type of equipment that is frequently moved for intended usage, or equipment intended to be installed where the provision for earthing connection is unlikely should not be designed as class I or class 0I equipment unless it is intended to be installed by skilled persons or instructed persons.		N/A
5.4.1.4.3	Add the following as a note to Table 10: NOTE In case no data for the material is available, Appendix 4, 1.(1).b. 3 of the Interpretation on the Ministerial Ordinance stipulating Technical Specifications for Electrical Appliances is regarded as maximum temperature limit of the material.		N/A
5.4.9.2	Add the following text to the NOTE:		N/A

	Alternatively, routine test in production-line may be in accordance with 5.2 (electric strength test) of IEC 62911.		
5.6.1	Add the following: Mains socket-outlet and appliance outlet shall comply with Clause G.4.2A if they are incorporated as part of the equipment.		N/A
5.6.2.1	Add the following to the third paragraph: Mains connection of class 0I equipment provided with instructional safeguard in accordance with Clause F.3.6.1A is considered to meet this requirement. Add the following at the end of the subclause: Mains plug having a lead wire for protective earthing connection of class 0I equipment shall comply with all of the following: – Not to be used for equipment having a rated voltage of 150 V or more – The lead wire for earthing is not connected to the earth by means of clip – The lead wire for earthing is at least 10 cm long If class 0I equipment provides an independent main protective earthing terminal and is intended to be installed by ordinary person, earthing wire shall be provided within the package for the equipment.		N/A
5.6.2.2	Add the following after the first sentence. However, this requirement does not apply to internal conductor of the cord set that is covered by the sheath of mains cord and is formed together with mains plug and appliance connector.		N/A
5.6.3	Add the following after NOTE 2. In addition, for class 0I equipment using power supply cord having two conductors (no earthing conductor), the conductor of protective earthing lead wire shall also comply with either of the following: – use of annealed copper wire with 1.6 mm diameter or corrosion-inhibiting metal wire having size and strength that are equivalent to or more than the above copper wire – single core cord or single core cab tire cable with 1.25 mm^2 or more cross-sectional area		N/A

	Replace NOTE 3 with the following NOTE 3 Heavy duty is defined in IEC 62440.		
5.6.4.2.1	Add NOTE 4 as follows: NOTE 4 In Japan, 20 A is widely used as protective current rating for mains circuit in case of mains outlet rated 20 A or less.		N/A
5.7.3	Change present NOTE to NOTE 1, and add the following paragraph after the NOTE 1: For class 0I equipment that is provided with mains socket-outlet in the configuration as specified in JIS C 8282 series or JIS C 8303, or otherwise being considered to comply with relevant regulations, or that is provided with mains appliance outlet as specified in JIS C 8283-2-2 for the purpose of interconnection, the measurement is conducted on the system of the interconnected equipment having a single connection to the mains. NOTE 2 Limits for class 0I equipment is specified in 5.7.4 NOTE 3 It is regarded as being in compliance with the relevant regulations if a connector complies with Appendix 4 of the interpretation of Ministerial Ordinance on stipulating technical requirements for the Electrical Appliances.		N/A
5.7.4	Add the following paragraph at the end of the first paragraph: In case of class 0I equipment, touch current shall not exceed 1.41 mA peak or for sinusoidal wave, 1.0 mA r.m.s. when measured using the network specified in Figure 4 of IEC 60990.		N/A
6.4.3.3	Replace the first dash paragraph with following: − a fuse complying with JIC C 6575 series or a fuse having equivalent characteristics shall open within 1 s; or NOTE 3 A fuse is considered to have equivalent characteristics to those complying with JIS C 6575 series if it complies with appendix 3 of the Ministerial Ordinance on stipulating technical requirements for the Electrical Appliance and Material. Add the following before the last paragraph: A fuse having time/current characteristics other than those specified in IEC 60127 shall be		N/A

	tested with the characteristics taken into account. In case of Class A fuse of JIS C 6575, replace “2.1 times” by “1.35 times” and in case of Class B fuse of JIS C 6575, replace “2.1 times” by “1.6 times”. NOTE 4 The above replacements apply also to fuses having equivalent characteristics to those specified in JIS C 6575 series.		
8.5.4.2.1	Add the following before NOTE 2: However, only stationary equipment that is directly connected to the three-phase supply rated more than 200 V ac can be considered for use in locations where children are not likely to be present, when complying with Clause F.4.		N/A
8.5.4.2.2	Replace the first paragraph with the following: For equipment installed where children may be present, an instructional safeguard shall be provided by easily understandable wording in accordance with Clause F.5, except that element 3 is optional. Replace the first dash with the following: − element 1a and element 2:  IEC 60417-6057 (2011-05) or  (JIS S 0101:2000, 6.2.1) and the following precautions • “The use by infants/children may cause a hazard of injury.” or equivalent 子供が使用することによって，傷害などの危害が発生するおそれがある。 Example in Japanese: • “A hand can be drawn into the mechanical section for shredding when touching the document-slot.” or equivalent Example in Japanese: 文書投入口に手を触れることによって，細断機構に引き込まれるおそれがある。 • “Clothing can be drawn into the mechanical section for shredding when touching the document-slot.” or equivalent Example in Japanese: 文書投入口に衣類が触れることによって，細断機構に引き込まれるおそれがある。 • “Hairs can be drawn into the mechanical section for shredding when touching the		N/A

	document-slot.” or equivalent Example in Japanese: 文書投入口に髪の毛が触れることによって，細断機構に引き込まれるおそれがある。 In case of equipment incorporating a commutator motor: • “The equipment may catch fire or explode by spraying of flammable gas.” or equivalent Example in Japanese: 可燃性ガスを噴射することによって引火又は爆発するおそれがある。 Delete the second dash.		
8.5.4.2.4	Replace the first statement with the following: The media destruction device is tested according to Clause V.1.2 with applicable jointed test probes to the opening. And then, tested with the wedge probe of Figure V.4 applied in any direction relative to the opening:		N/A
8.5.4.2.5	Replace the second sentence in the first paragraph with the following: The wedge probe of Figure V.4 and applicable jointed test probes specified in Clause V.1.2 shall not contact any moving part. Add the following after the second paragraph: Instructional safeguard shall not substitute an equipment safeguard for preventing access to hazardous moving parts.		N/A
9.2.6, Table 38	Replace the top row of TS2 in column of “Accessible parts” with the following: Handles, Knobs, grips, etc. and external surfaces either held, touched or worn against the body in normal use (> 1 min) [b,c]		N/A
Annex F F.3.5.1	Add the following after the second paragraph. Class 0I equipment shall be provided with an instructional safeguard in accordance with Clause F.5 when a mains socket-outlet as specified in JIS C 8282 series, JIS C 8303 or relevant regulation to which class I equipment can be connected is provided in accordance with Clause G.4.2A except for the cases where the socket-outlet is accessible only to skilled persons. NOTE Appendix 4 of the Ministerial Ordinance on stipulating technical requirements for the Electrical Appliance is an example of the relevant regulation.		N/A

	The elements of the instructional safeguard shall be as follows: – element 1a: not applicable – element 2: “Only for (equipment name)” or equivalent text Example in Japanese: (equipment name)専用コンセント – element 4: “This socket-outlet is for use only with (manufacturer's name), (model number or series), (equipment name)” or equivalent text Example in Japanese: このコンセントは, (manufacturer's name), (model number or series), (equipment name)だけが接続することを意図しています。 – element 3: “Use with other equipment may result in electric shock” or equivalent text Example in Japanese: その他の機器を接続すると感電の危険があります。 The elements shall be in the order 2, 4, and 3. The element 2 shall be marked adjacent to the mains socket-outlet. The rated voltage and assigned current or power of a mains socket-outlet need not be marked on the equipment provided with this instructional safeguard.		
Annex F F.3.5.3	Replace the third dashed paragraph with the following. – if the fuse is necessary for the safeguard function, the symbols indicating pre-arcing time-current characteristic. Example F: Fast blow T: Time-delay Ⓐ: Class A Ⓑ: Class B		N/A
Annex F F.3.6.1A	Add the following new clause after F.3.6.1.3. F.3.6.1A Marking for class 0I equipment The requirements of Clauses F.3.6.1.1 and F.3.6.1.3 also apply to class 0I equipment. For class 0I equipment, the following or equivalent instructions shall be marked on the mains plug or on the visible place of the main body.		N/A

	"Provide an earthing connection" Example in Japanese: "必ず接地接続を行ってください。" In addition to the above, for class 0I equipment, the following instructional safeguard shall be marked on the visible place of the main body or shall be in the text of an accompanying document. "Provide an earthing connection before the mains plug is connected to the mains. And, when disconnecting the earthing connection, be sure to disconnect after pulling out the mains plug from the mains." Example in Japanese: 接地接続は必ず，電源プラグを電源につなぐ前に行ってください。 また，接地接続を外す場合は，必ず電源プラグを電源から切り離してから行ってください。		
Annex F F.3.6.2.1	Replace the third paragraph with the following: The above symbols shall not be used for class I equipment or class 0I equipment.		N/A
Annex F F.4	Replace the fourth dashed paragraph with the following: - For audio equipment with terminals classified as ES3 in accordance with Table E.1, and for other equipment with terminals marked in accordance with F.3.6.1 and F.3.6.1A, the instructions shall require that the external wiring connected to these terminals shall be installed by a skilled person, or shall be connected by means of ready-made leads or cords that are constructed in a way that would prevent contact with any ES3 circuit. Add the following after the ninth dashed paragraph. – For class 0I equipment provided with independent main protective earthing terminal, where the cord for the protective earthing connection is not provided within the package for the equipment, if the protective earthing connection is made by instructed person or skilled person, the suitable installation instruction for the protective earthing connection shall be provided.		N/A
Annex G G.3.2.1	Replace the paragraph a) with the following. a) The thermal link when tested as a separate component, shall comply with the requirements of JIS C 6691 or have properties equivalent to or better than that.		N/A

	NOTE Thermal links complying with appendix 3 of the Ministerial Ordinance on stipulating technical requirements for the Electrical Appliance and Material are considered to have equivalent or better properties.		
Annex G G.3.4	Replace the first paragraph by the following. Except for devices covered by Clause G.3.5, overcurrent protective devices used as a safeguard shall comply with the relevant JIS harmonizing with IEC standard, or shall have equivalent or better properties. If there are no applicable JIS, they shall comply with relevant IEC standard. NOTE Fuses complying with appendix 3, or circuit breakers or residual current circuit breakers complying with appendix 4 of Ministerial Ordinance on stipulating technical requirements for the Electrical Appliance and Material are considered to have equivalent or better properties.		N/A
Annex G G.4.1	Add the following sentence at the end of this clause. This requirement is not applicable to Clauses G.4.2 and G.4.2A.		N/A
Annex G G.4.2	Replace with the following. G.4.2 Mains connectors (including mains plug and socket-outlet) Mains connector shall comply with JIS C 8282 series, JIS C 8283 series, JIS C 8285, JIS C 8303 or IEC 60309 series. Mains plugs and socket-outlets shall comply with JIS C 8282 series, JIS C 8303, IEC 60309 series, or have equivalent or better properties. NOTE Mains plug complying with appendix 4 of the interpretation of Ministerial Ordinance on stipulating technical requirements for the Electrical Appliance is regarded to have equivalent or better properties. A power supply cord set provided with appliance connector that can fit appliance inlet complying with JIS C 8283-1 shall comply with JIS C 8286. Equipment shall be constructed so that mechanical stress does not transmit to the soldering part of inlet terminal during insertion or removal of the connector. Construction that the body of the inlet is secured and the securement not relied on soldering only is considered to		P

	comply. When an equipment is rated not more than 125 V and complies with all the following requirements, Type C14 and C18 appliance coupler complying with JIS C 8283 series can be considered as rated 15 A – The temperature of appliance coupler does not exceed the value specified in JIS C 8283-1 under the most unfavorable normal operating condition. – " Use only designated cord set attached in this equipment " or equivalent text is described in the operating instruction. If the cord set is not provided within the package for the equipment, suitable information regarding to the cord set is described in the operating instruction. Example in Japanese: “この機器に同こん(梱)した指定の電源コードセットだけを使用して下さい。”		
Annex G G.4.2A	Add the following new clause after G.4.2. G.4.2A Mains socket-outlet and interconnection coupler provided with the equipment The equipment provided with mains socket-outlet configured in accordance with JIS C 8282 series, JIS C 8303 or relevant standards or with interconnection coupler configured in accordance with JIS C 8283-2-2 shall comply with the following: – Socket-outlet and interconnection coupler provided in class II equipment can connect other class II equipment only. – Socket-outlet and interconnection coupler provided in class I equipment can connect other class II equipment only, or is provided with protective earthing pole that is reliably connected to protective earthing terminal or point of the equipment. –Interconnection coupler provided in class 0I equipment can connect other class II equipment only. If the all the followings are met, class I equipment can be connected. • The interconnection coupler is provided with a protective earthing pole that is reliably connected to the protective earthing point or terminal of the equipment. • Touch current measured according to 5.7.3 as a system of interconnected equipment with one connection to the mains does not exceed the limit for class 0I equipment specified in 5.7.4. – Socket-outlet provided in class 0I equipment can connect other class II equipment only. If the socket-outlet is provided for interconnection and		N/A

	the all the followings are met, class I equipment can be connected. • Socket-outlet is provided with protective earthing pole that is reliably connected to protective earthing point or terminal of the equipment. • Except for socket-outlet which only skilled person can access, instructional safeguard specified in Clause F.3.5.1 is provided so that only equipment intended by the manufacturer is connected. • Touch current measured according to 5.7.3 as a system of interconnected equipment with one connection to the mains does not exceed the limited for class 0I equipment specified in 5.7.4. – Cord set for interconnection provided within the package for the equipment providing the interconnection coupler complying with JIS C 8283-2-2 complies with JIS C 8286. NOTE 1 Considering the wiring circumstance in Japan, transportable or similar type of equipment that is frequently moved for intended usage, class 0I equipment should not be provided with mains socket-outlet configured in accordance with JIS C 8282 series, JIS C 8303 or relevant regulation unless it is intended to be installed by skilled person. NOTE 2 Acceptable configuration of relevant regulation refers to appendix 4 of the interpretation of Ministerial Ordinance on stipulating technical requirements for the Electrical Appliance.		
Annex G G.4.3	Add following NOTE after EXAMPLE. NOTE The statement, “An example of a connector not meeting the requirements of this subclause is the so called “banana” plug” is deleted from above EXAMPLE.		N/A
Annex G G.7.1	Replace the third dashed paragraph with the following. – other types of cords may be used if they have equivalent electro-mechanical and fire safety properties as above. Add the following after NOTE 3. NOTE 3A Sheathed mains cords complying with appendix 1 of the interpretation of Ministerial Ordinance on stipulating technical requirements for the Electrical Appliance are considered to		N/A

	have equivalent or better electro-mechanical and fire safety properties. Add the following after the first sentence in the paragraph after present NOTE 3: However, a mains supply cord need not include the protective earthing conductor for class 0I equipment provided with independent protective earthing conductor.		
Annex G G.7.2	Add the following new NOTE 0A after the first sentence. NOTE 0A The cross-sectional area of mains cords may comply with relevant Japanese wiring regulation if it complies with appendix 1 of the interpretation of Ministerial Ordinance on stipulating technical requirements for the Electrical Appliance that is referenced in Clause G.7.1 as having equivalent or better electro-mechanical and safety properties.		N/A
Annex G G.7.6.1	Add the following new NOTE 0A to end of this sub-clause. NOTE 0A The cross-sectional area of mains cords may comply with relevant Japanese wiring regulation if it complies with appendix 1 of the interpretation of Ministerial Ordinance on stipulating technical requirements for the Electrical Appliance that is referenced in Clause G.7.1 as having equivalent or better electro-mechanical and safety properties.		N/A
Annex G G.8.3.3	Replace the first dotted paragraph in the first dashed paragraph with the following: • withstand 1,71 × 1.1 × U_0 for 5 s. Replace the NOTE 2 with the following. NOTE 2 For different power distribution systems, the temporary overvoltages are defined in Table B.3 of JIS C 5381-11 (TOV test parameters for Japanese systems)		N/A

Country	Sweden
IECEE Member NCB	Intertek Semko AB
IEC Standard	IEC 62368-1:2014 (Ed. 2.0)
Corresponding National Standard	SS-EN 62368-1:2014
Regulatory Requirements	N/A

SWEDEN NATIONAL DIFFERENCES			
Clause	Requirement + Test	Result - Remark	Verdict
Various	Please see the EN version of the standard where the Swedish National and Special National Deviations are stated.		—

ATTACHMENT TO TEST REPORT IEC 62368-1 2th Ed. U.S.A. NATIONAL DIFFERENCES Audio/video, information and communication technology equipment – Part 1: Safety requirements	
Differences according to.....:	CSA/UL 62368-1:2014
Attachment Form No.....:	US&CA_ND_IEC623681B
Attachment Originator .....:	UL(US)
Master Attachment.....:	Date 2015-06
Copyright © 2015 IEC System for Conformity Testing and Certification of Electrical Equipment (IECEE), Geneva, Switzerland. All rights reserved.	

Clause	Requirement + Test	Result - Remark	Verdict
IEC 62368-1 - US and Canadian National Differences Special National Conditions based on Regulations and Other National Differences			
1.1	All equipment is to be designed to allow installation according to the National Electrical Code (NEC), ANSI/NFPA 70, the Canadian Electrical Code (CEC), Part I, CAN/CSA C22.1, and when applicable, the National Electrical Safety Code, IEEE C2. Also, for such equipment marked or otherwise identified, installation is allowed per the Standard for the Protection of Information Technology Equipment, ANSI/NFPA 75.		P
1.4	Additional requirements apply to some forms of power distribution equipment, including sub-assemblies.		P
4.1.17	For lengths exceeding 3.05 m, external interconnecting flexible cord and cable assemblies are required to be a suitable cable type (e.g., DP, CL2) specified in the NEC.		N/A
	For lengths 3.05 m or less, external interconnecting flexible cord and cable assemblies that are not types specified in the NEC generally are required to have special construction features and identification markings.		P
4.8	Lithium coin / button cell batteries have modified special construction and performance requirements.		N/A
5.6.3	Protective earthing conductors comply with the minimum conductor sizes in Table G.5, except as required by Table G.7ADV.1 for cord connected equipment, or Annex DVH for permanently connected equipment		N/A
5.7.7	Equipment intended to receive telecommunication ringing signals complies with a special touch current measurement tests.		N/A

Clause	Requirement + Test	Result - Remark	Verdict
6.5.1	PS3 wiring outside a fire enclosure complies with single fault testing in B.4, or be current limited per one of the permitted methods.		P
Annex F (F.3.3.8)	Output terminals provided for supply of other equipment, except mains, supply are marked with a maximum rating or references to which equipment it is permitted to be connected.		P
Annex G (G.7.1)	Permanent connection of equipment to the mains supply by a power supply cord is not permitted, except for certain equipment, such as ATMs.		N/A
Annex G (G.7.3)	Power supply cords are required to have attachment plugs rated not less than 125 percent of the rated current of the equipment.		N/A
	Flexible power supply cords are required to be compatible with Article 400 of the NEC, and Tables 11 and 12 of the CEC.		N/A
Annex G (G.7.5)	Minimum cord length is required to be 1.5 m, with certain constructions such as external power supplies allowed to consider both input and output cord lengths into the requirement. Power supply cords are required to be no longer than 4.5 m in length if used in ITE Rooms.		N/A
Annex H.2	Continuous ringing signals under normal operating conditions up to 16 mA only are permitted if the equipment is subjected to special installation and performance restrictions.		N/A
Annex H.4	For circuits with other than ringing signals and with voltages exceeding 42.4 V_{peak} or 60 V d.c., the maximum acceptable current through a 2000 ohm resistor (or greater) connected across the voltage source with other loads disconnected is 7.1 mA peak or 30 mA d.c. under normal operating conditions.		N/A
Annex M	Battery packs for stationary applications comply with special component requirements.		N/A
Annex DVA (1)	Equipment intended for use in spaces used for environmental air are subjected to special flammability requirements for heat and visible smoke release.		N/A
	For ITE room applications, automated information storage systems with combustible media greater than 0.76 m^3 (27 cu ft) have a provision for connection of either automatic sprinklers or a gaseous agent extinguishing system with an extended discharge.		N/A
	Consumer products designed or intended primarily for children 12 years of age or younger are subject to additional requirements in accordance with U.S. & Canadian Regulations.		N/A

Clause	Requirement + Test	Result - Remark	Verdict
	Baby monitors additionally comply with ASTM F2951, Consumer Safety Specification for Baby Monitors.		N/A
Annex DVA (5.6.3)	For Pluggable Equipment Type A, the protection in the installation is assumed to be 20A.		P
Annex DVA (6.3)	The maximum quantity of flammable liquid stored in equipment complies with NFPA 30.		N/A
Annex DVA (6.4.8)	For ITE room applications, enclosures with combustible material measuring greater than 0.9 m^2 (10 sq ft) or a single dimension greater than 1.8 m (6 ft) have a flame spread rating of 50 or less. For equipment with the same dimensions for other applications, an external surface that is not a fire enclosure requires a min. flammability classification of V-1.		N/A
Annex DVA (10.3.1)	Equipment with lasers meets the U.S. Code of Federal Regulations 21 CFR 1040 (and the Canadian Radiation Emitting Devices Act, REDR C1370).		N/A
Annex DVA (10.5.1)	Equipment that produces ionizing radiation complies with the U.S. Code of Federal Regulations, 21 CFR 1020 (and the Canadian Radiation Emitting Devices Act, REDR C1370).		N/A
Annex DVA (F.3.3.3)	Equipment for use on a.c. mains supply systems with a neutral and more than one phase conductor (e.g. 120/240 V, 3-wire) require a special marking format for electrical ratings. Additional considerations apply for voltage ratings that exceed the attachment cap rating or are lower than the “Normal Operating Condition” in Table 2 of CAN/CSA C22.2 No. 235.”		N/A
Annex DVA (F.3.3.5)	Equipment identified for ITE (computer) room installation is marked with the rated current		N/A
Annex DVA (G.1)	Vertically-mounted disconnect switches and circuit breakers have the "on" position indicated by the handle in the up position		N/A
Annex DVA (G.3.4)	Suitable NEC/CEC branch circuit protection rated at the maximum circuit rating is required for all standard supply outlets and receptacles (such as supplied in power distribution units) if the supply branch circuit protection is not suitable.		N/A
Annex DVA (G.4.2)	Equipment with isolated ground (earthing) receptacles complies with NEC 250.146(D) and CEC 10-112 and 10-906(8).		N/A
Annex DVA (G.4.3)	Where a fuse is used to provide Class 2 or Class 3 current limiting, it is not operator-accessible unless it is non- interchangeable.		N/A

Clause	Requirement + Test	Result - Remark	Verdict
Annex DVA (G.5.3)	Power distribution transformers distributing power at 100 volts or more, and rated 10 kVA or more, require special transformer overcurrent protection.		N/A
Annex DVA (G.5.4)	Motor control devices are required for cord-connected equipment with a mains-connected motor if the equipment is rated more than 12 A, or if the equipment has a nominal voltage rating greater than 120 V, or if the motor is rated more than 1/3 hp (locked rotor current over 43 A).		N/A
Annex DVA (Annex M)	For ITE room applications, equipment with battery systems capable of supplying 750 VA for five minutes have a battery disconnect means that may be connected to the ITE room remote power-off circuit.		N/A
Annex DVA (Q)	Wiring terminals intended to supply Class 2 outputs according to the NEC or CEC Part 1are marked with the voltage rating and “Class 2” or equivalent; marking is located adjacent to the terminals and visible during wiring.		N/A
Annex DVB (1)	Additional requirements apply for equipment used for entertainment purposes intended for installation in general patient care areas of health care facilities.		N/A
Annex DVC (1)	Additional requirements apply for equipment intended for mounting under kitchen cabinets.		N/A
Annex DVE (4.1.1)	Some equipment, components, sub-assemblies and materials associated with the risk of fire, electric shock, or personal injury have component or material ratings in accordance with the applicable national (U.S. and Canadian) component or material requirements. Components required to comply include: appliance couplers, attachment plugs, battery back-up systems, battery packs, circuit breakers, communication circuit accessories, connectors (used for current interruption of non-LPS circuits), power supply cords, direct plug-in equipment, electrochemical capacitor modules (energy storage modules with ultra-capacitors), enclosures (outdoor), flexible cords and cables, fuses (branch circuit), ground-fault current interrupters, interconnecting cables, data storage equipment, printed wiring, protectors for communications circuits, receptacles, surge protective devices, vehicle battery adapters, wire connectors, and wire and cables.		N/A
Annex DVH	Equipment for permanent connection to the mains supply is subjected to additional requirements.		N/A
Annex DVH (DVH.1)	Wiring methods (terminals, leads, etc.) used for the connection of the equipment to the mains are in accordance with the NEC/CEC.		N/A

Clause	Requirement + Test	Result - Remark	Verdict
Annex DVH (DVH.3.2)	Terminals for permanent wiring, including protective earthing terminals, are suitable for U.S./Canadian wire gauge sizes, rated 125 percent of the equipment rating, and are specially marked when specified.		N/A
Annex DVH (DVH.3.2)	Wire binding screws are not permitted to attach conductors larger than 10 AWG (5.3 mm^2).		N/A
Annex DVH (DVH.4)	Permanently connected equipment is required to have a suitable wiring compartment and wire bending space.		N/A
Annex DVH (DVH 5.5)	Equipment connected to a centralized d.c. power system, and having one pole of the DC mains input terminal connected to the main protective earthing terminal in the equipment, complies with special earthing, wiring, marking and installation instruction requirements.		N/A
Annex DVI (6.7)	Equipment intended for connection to telecommunication network outside plant cable is required to be protected against overvoltage from power line crosses.		N/A
Annex DVJ (10.6.1)	Equipment connected to a telecommunication and cable distribution networks and supplied with an earphone intended to be held against, or in the ear is required to comply with special acoustic pressure requirements.		N/A

Enclosure No. 2

Pictures of the unit

(9 pages including this cover page)

Class II model


GlobTek, Inc.
www.globtek.com
ITE POWER SUPPLY
P/N(料号): TR9KB3000LCP-N(R6B)
MODEL(型号): GT-46200-1806-0.05-T2
INPUT(输入): 100-240V~ 50-60Hz 0.5A
OUTPUT(输出): 5.95V ⎓ 3A
GlobTek, Inc.
LPS
EFFICIENCY LEVEL VI
IP40
RoHS 2
MADE IN CHINA
3615

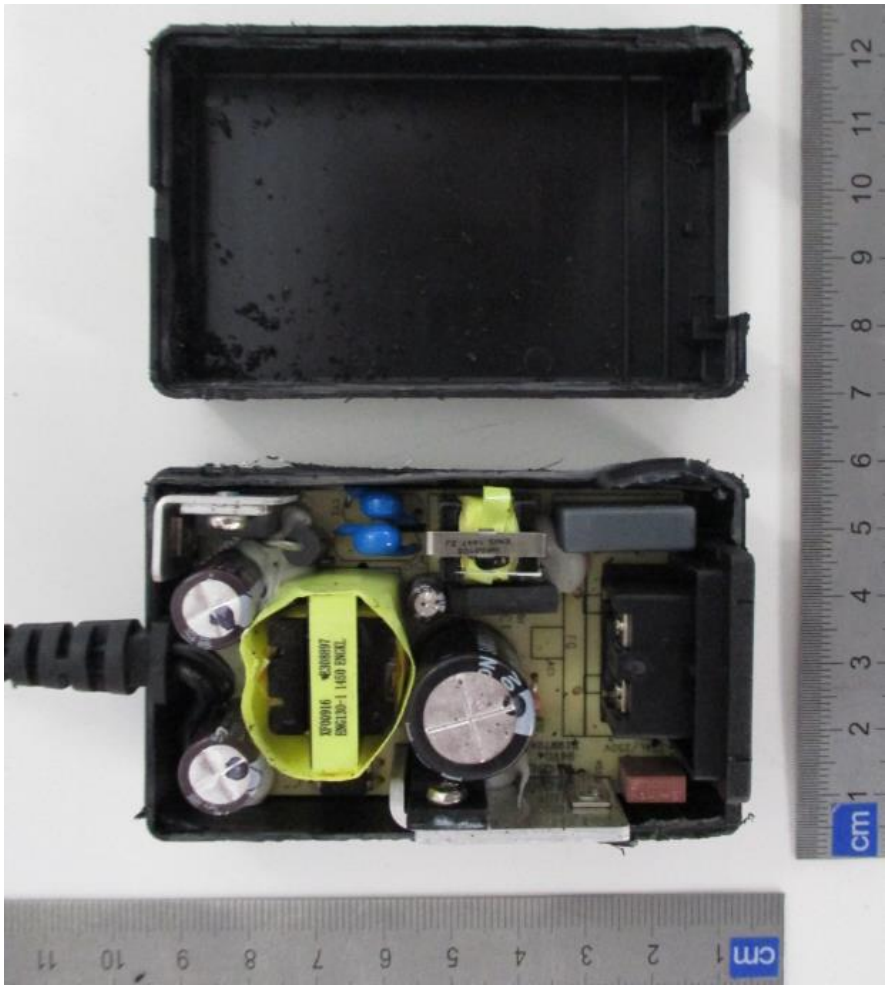

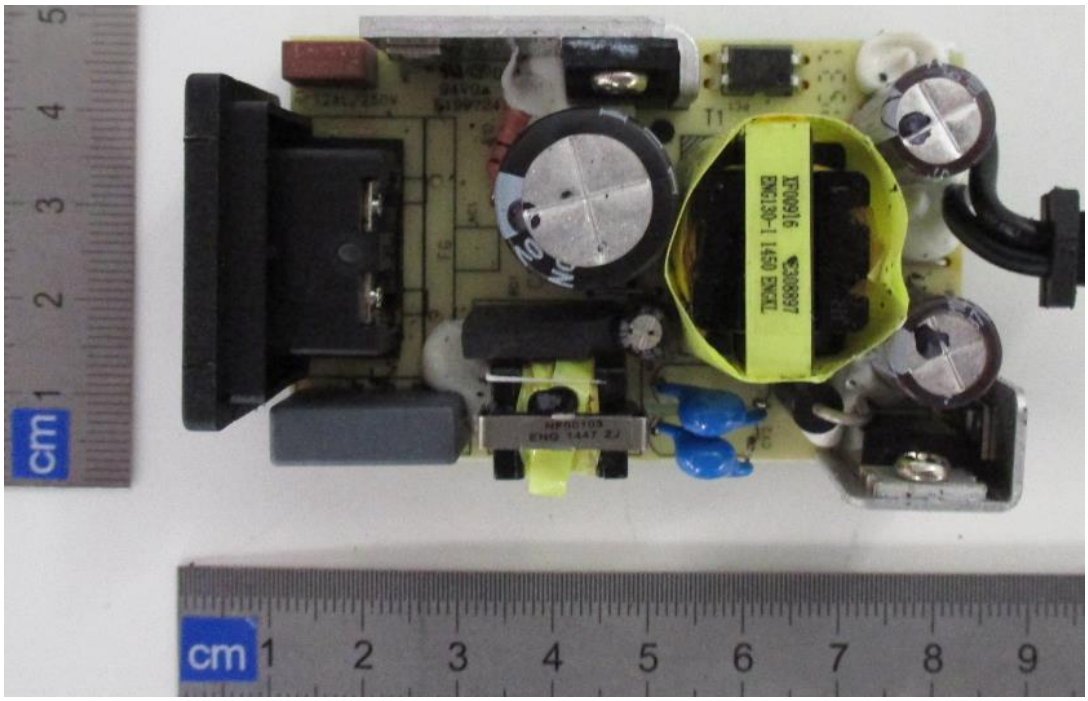

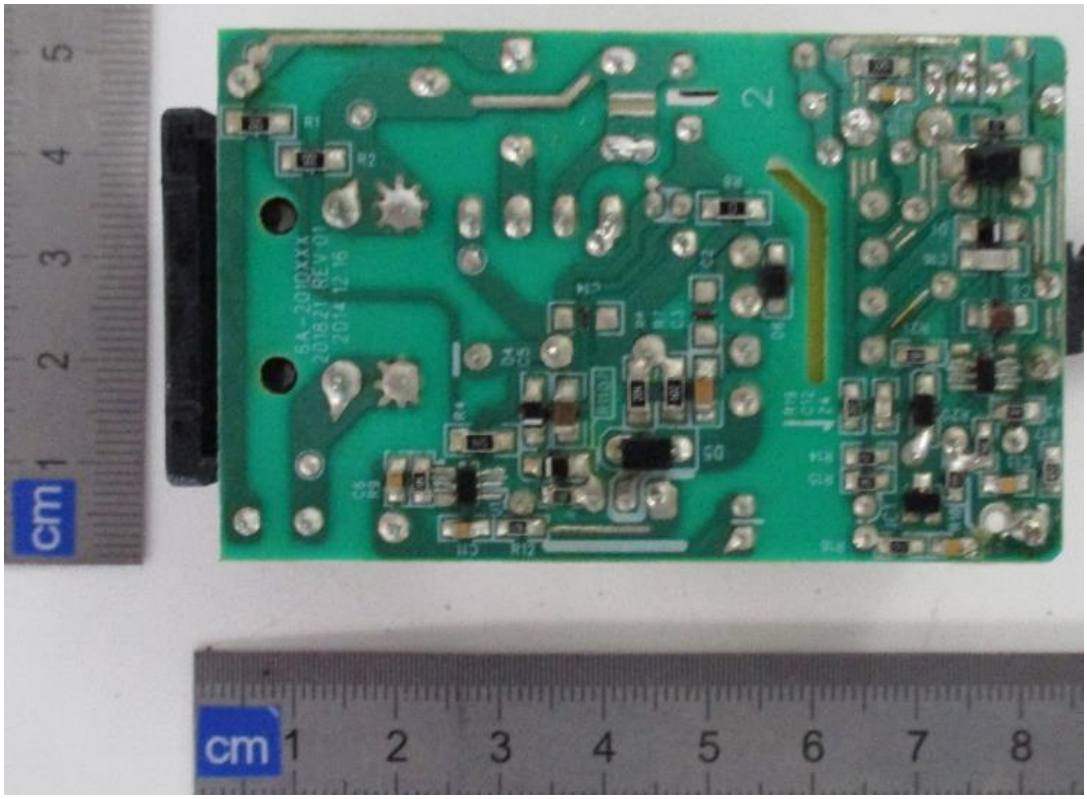

Class I model


GlobTek, Inc.
www.globtek.com
ITE POWER SUPPLY
P/N: TR9CB3000LCP-N(R6B)
MODEL: GT-46200-1806-0.05-T3
INPUT: 100-240V~ 50-60Hz 0.5A
OUTPUT: 5.95V 3A
GlobTek, Inc.
LPS
EFFICIENCY LEVEL VI
IP40
RoHS 2
MADE IN CHINA
3815

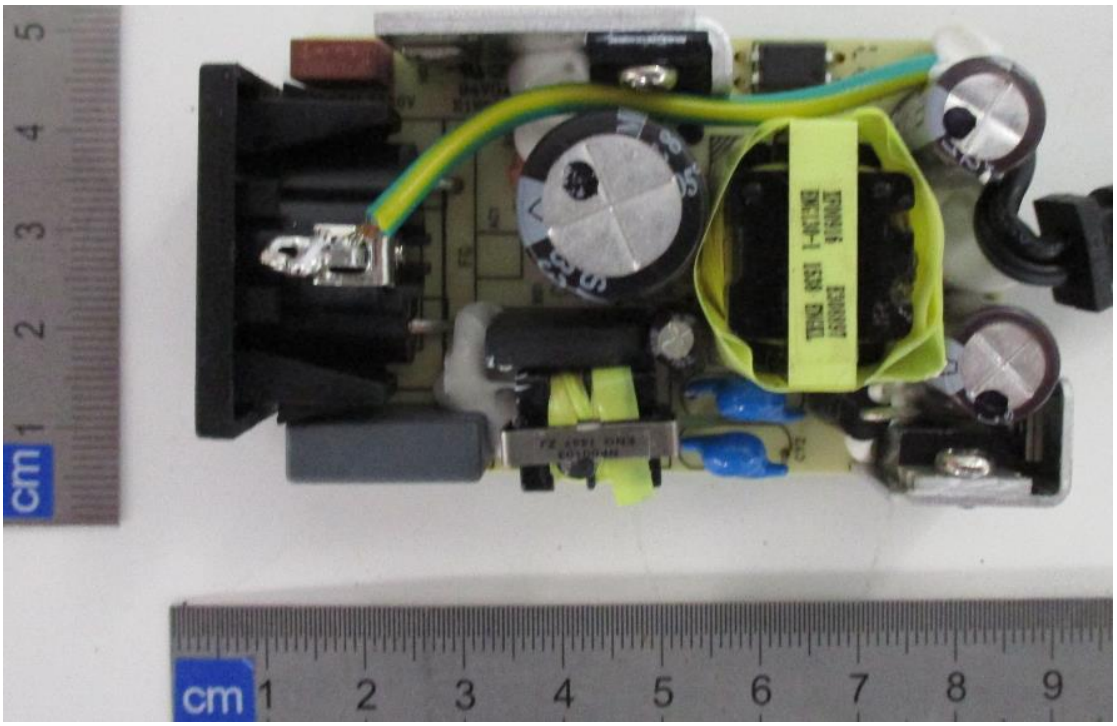

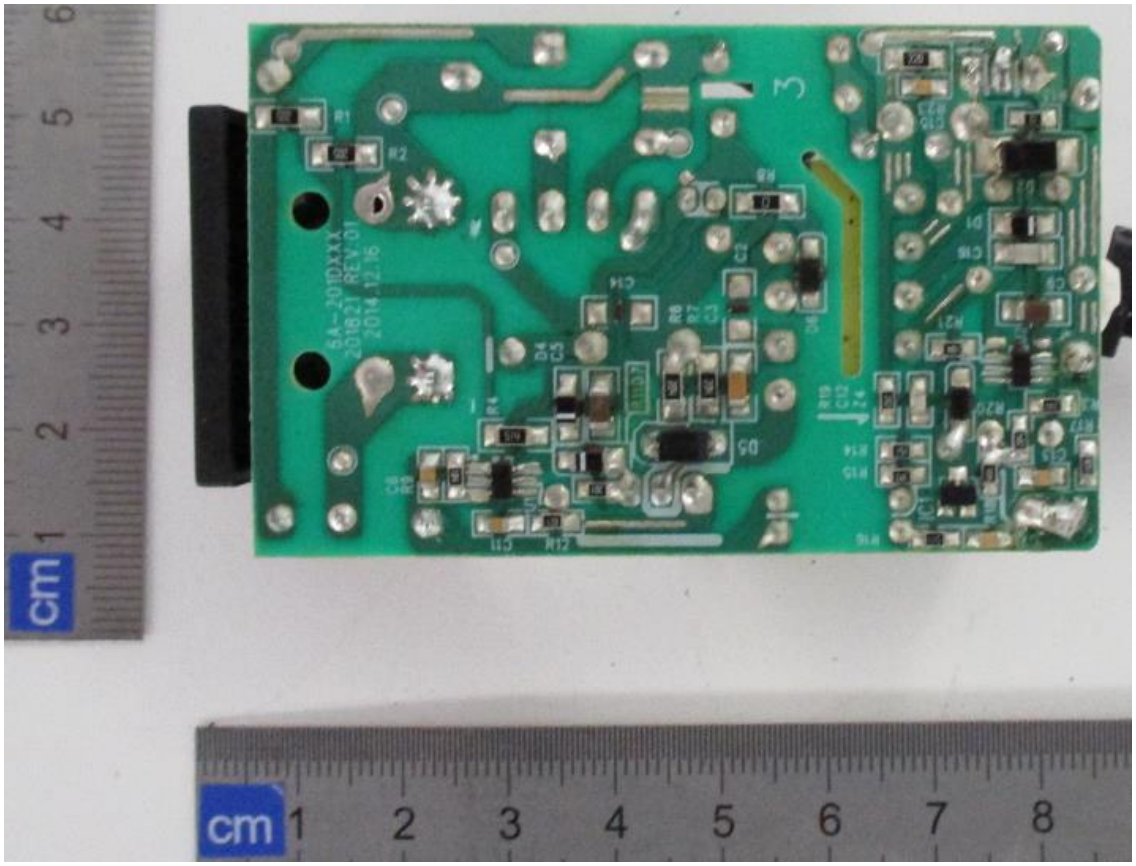

Final sample will be provided with tubing (see marked red below and refer to table 4.2.1 for details)

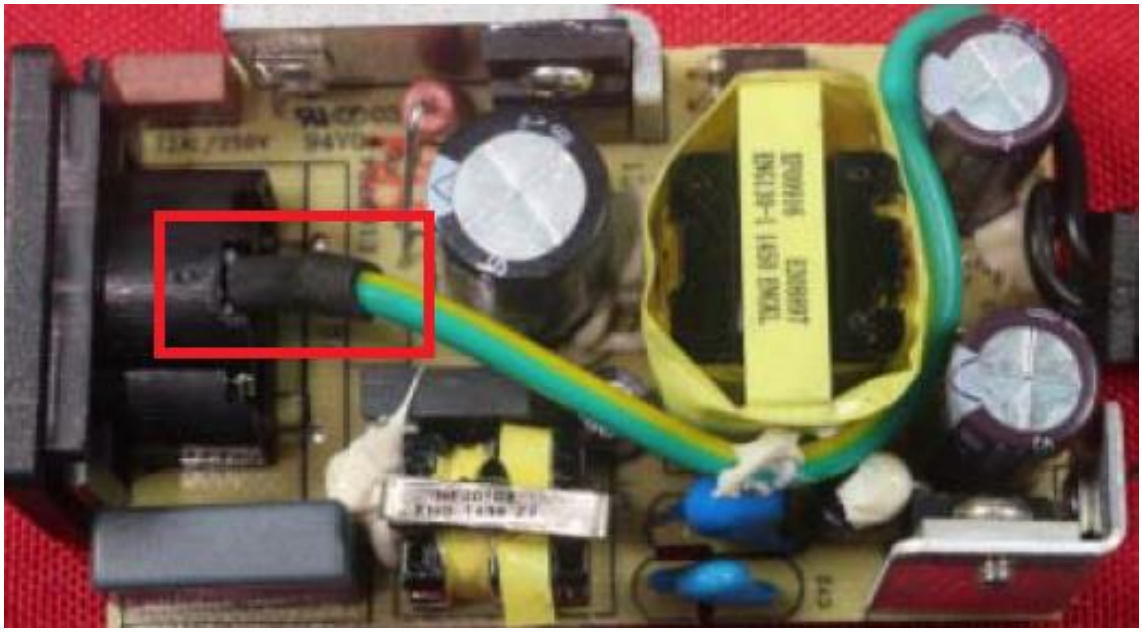

Enclosure No. 3

Technical documentation – schematics, layouts, transformer data (31 pages including this cover page)

GlobTek, Inc. www.globtek.com 186 Veterans Drive, Northvale, NJ 07647 Tel. (201) 784-1000 Fax (201) 784-0111	Drawing Title: GT-46200-2005-T3, ITE Power Supply, Efficiency Level: VI, Case Color/Style: GlobTek Black, Desktop/External, Regulated Switchmode AC-DC, Input Rating: 100-240V~, 50-60 Hz, IEC 60320/C14 , Output Rating: 20W, 5V@4A, Output Configuration: 1200 mm, 16/1C + Shield Cond, UL 1185, Female Barrel 5.5 * 2.5 * 11mm with internal Spring Clip and Locking Notch or Equal, Ferrite: Core Size: 14.2*28.5*8.2, GlobTek Black, GT Cord # C2224, Pin Out: Center Positive (+V), Blades/Input Cord: Not Applicable, Approvals: CE China RoHS GOST-R IP40 Level VI LPS PSE RoHS 2 Ukraine VCCI WEEE Class I	
	Model No. GT-46200-2005-T3	
	Part No. TR9CA4000LCP-N(R6B)	Rev C

REVISION HISTORY

REV	DESCRIPTION	SUB	DATE	APPROVED
C	Change model to GT-46200-2005-T3 and change CQC PSE to TUV PSE	QA	08/06/2015	QA
B	Update O/P cord from 18AWG/1830 mm to 16AWG/1200 mm	QA	06/01/2015	QA
A	Initial release	QA	05/13/2015	QA

In Addition to GlobTek Inc.'s renewed ISO9001:2008 - Quality Management System Certification, GlobTek Inc. is now certified to:

ISO13485:2003 - Medical Devices Quality Management System Certification
ISO14001:2004 - Environmental Management System Certification

ISO Certificates are available online at http://www.globtek.com/iso-certificates/

Customer Approval of Specification:

Please approve, sign and send back to GlobTek so we can complete order processing.
A delay in receipt of this form will delay delivery schedule.
Company Name:
Customer P/N:
Quote Number:
Date:
Authorized Representative Name:

Authorized Representative Signature:

The acceptance of this specification and use of the product described in this document indicates the acceptance and binding of the customer to Globtek terms and conditions, which supersede all other agreements, terms, and conditions (http://en.globtek.com/terms-and-conditions/).

Footnote:

GlobTek Inc. will not be liable for the safety and performance of these power supplies if unauthorized access and repair occurs. End user should consult applicable UL, CSA or EN standards for proper installation instruction.

Limitation of Use:

GlobTek product are not authorized for use as mission critical components in life support hazardous environment, nuclear or aircraft applications without prior written approval from the CEO of GlobTek Inc.
Contents of this document are subject to change without prior notice.

RELEASED
By N.Frost at 11:15 am, Aug 10, 2015

GlobTek, Inc. www.globtek.com 186 Veterans Drive, Northvale, NJ 07647 Tel. (201) 784-1000 Fax (201) 784-0111	Drawing Title: GT-46200-2005-T3, ITE Power Supply, Efficiency Level: VI, Case Color/Style: GlobTek Black, Desktop/External, Regulated Switchmode AC-DC, Input Rating: 100-240V~, 50-60 Hz, IEC 60320/C14 , Output Rating: 20W, 5V@4A, Output Configuration: 1200 mm, 16/1C + Shield Cond, UL 1185, Female Barrel 5.5 * 2.5 * 11mm with internal Spring Clip and Locking Notch or Equal, Ferrite: Core Size: 14.2*28.5*8.2, GlobTek Black, GT Cord # C2224, Pin Out: Center Positive (+V), Blades/Input Cord: Not Applicable, Approvals: CE China RoHS GOST-R IP40 Level VI LPS PSE RoHS 2 Ukraine VCCI WEEE Class I	
	Model No. GT-46200-2005-T3	
	Part No. TR9CA4000LCP-N(R6B)	Rev C

POWER SUPPLY INFORMATION

TYPE:	Desktop/External
TECHNOLOGY:	Regulated Switchmode AC-DC
CASE COLOR:	GlobTek Black
NAMEPLATE RATED INPUT:	100-240V~, 50-60 Hz, 0.5 A
INPUT CONFIG:	IEC 60320/C14
WATTS:	20.0
VOLTS OUT:	5
CURRENT OUT (Amps):	4
BLADE/CORD INCLUDED:	N/A: Not Applicable
BLADE/CORD INSTALLED:	N/A: Not Applicable
EFFICIENCY LEVEL:	VI
OUTPUT CONFIGURATION	1200 mm, 16/1C + Shield Cond, UL 1185, Female Barrel 5.5 * 2.5 * 11mm with internal Spring Clip and Locking Notch or Equal, Ferrite: Core Size: 14.2*28.5*8.2, GlobTek Black, GT Cord # C2224
CONNECTOR PIN OUT:	Center Positive (+V)
LABEL SPECS:	Standard GT,L-1186
PACK SPEC:	Packing for GT-43090

NOTES / DEVIATIONS:

DIMENSIONS ARE IN MM UNLESS SPECIFIED OTHERWISE.

ELECTRICAL SPECIFICATIONS

A) ELECTRICAL SPECIFICATIONS:
01. Input Voltage: Specified 90-264 Vac, Nameplate rated: 100-240Vac
02. Input Frequency: Specified 47-63 Hz, Nameplate rated 50-60Hz
03. Inrush Current: 50A Max. at 115VAC cold start, 100A Max. at 230VAC cold start
04. Average Efficiency: 82.44% Min (CEC & DOE LEVEL VI Compliant), 82.97% Min (ErP Tier2 Compliant)
05. Input power(no load): <0.1W (CEC & DOE LEVEL VI Compliant), <0.075W (ErP Tier2 Compliant)
07. Output Voltage toterance: ±5%
08.Load regulation: ±5%
09. Output Voltage: Tolerance ± 5%
10. Turn On Delay: 3000 mS MAX at 115 VAC Full Load
11. Hold Up Time: 10 mS Min at 100 VAC Full Load
12. Ripple Voltage: 150mV (p-p): Input :(100V-240VAC), Output:full load
Measuring is done by 20MHz bandwidth oscilloscope and terminated each output with a 10uF aluminum electrolytic capacitor and 0.1uF ceramic capacitor.

B) PROTECTION
01. Over voltage protection: protection zener
02. Short circuit protection: Output shut down and auto- recover
03.Over Load Protection: Output shut down and auto restart

C) SAFETY
01. HI-POT : Input to output : 1500VAC or 2121VDC 10mA 1 minute
02.Leakage Current: <0.35mA
03. Insulation resistance: Input to output: 500vdc to test the input to output resistance not be less 100M ohm

D) OTHER:
01. MTBF: 200,000 Hours @ 25°C ambient temperature
02. Operating Temperature: 0°C to 40°C ambient temperature
03. Humidity Operating : 20% to 80%. 0% to 90% relative humidity
04. Storage Temperature: -10°C to 70°C
Humidity Storage: 10% to 90%

GlobTek, Inc. www.globtek.com 186 Veterans Drive, Northvale, NJ 07647 Tel. (201) 784-1000 Fax (201) 784-0111	Drawing Title: GT-46200-2005-T3, ITE Power Supply, Efficiency Level: VI, Case Color/Style: GlobTek Black, Desktop/External, Regulated Switchmode AC-DC, Input Rating: 100-240V~, 50-60 Hz, IEC 60320/C14 , Output Rating: 20W, 5V@4A, Output Configuration: 1200 mm, 16/1C + Shield Cond, UL 1185, Female Barrel 5.5 * 2.5 * 11mm with internal Spring Clip and Locking Notch or Equal, Ferrite: Core Size: 14.2*28.5*8.2, GlobTek Black, GT Cord # C2224, Pin Out: Center Positive (+V), Blades/Input Cord: Not Applicable, Approvals: CE China RoHS GOST-R IP40 Level VI LPS PSE RoHS 2 Ukraine VCCI WEEE Class I	
	Model No. GT-46200-2005-T3	
	Part No. TR9CA4000LCP-N(R6B)	Rev C

05. RoHS 2: Complies with EU 2011/65/EU andChina SJ/T 11364-2014

E) ENCLOSURE
01. Housing: High impact plastic, 94V0 polycarbonate, non-vented
02. Size: 80.0 x 50.0 x 310 +/-1.0 mm
03. Markings: Label and/or Pad Printed and/or Molded in the case

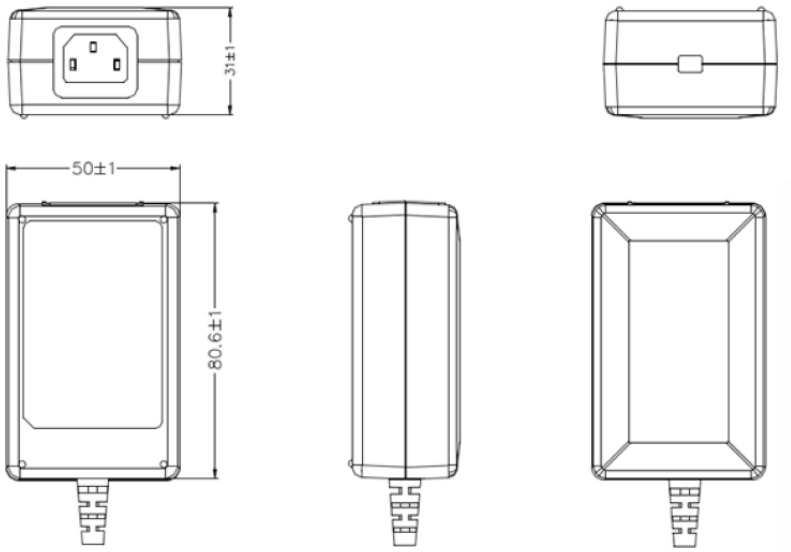

DERATING CURVE

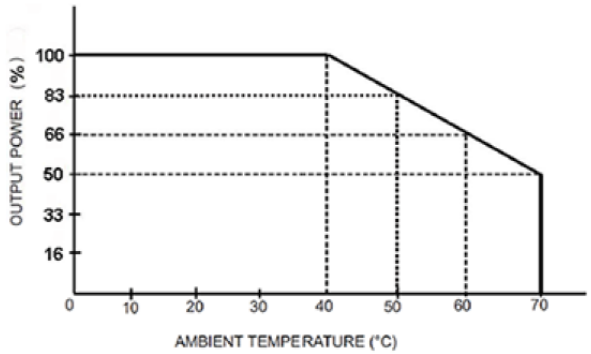

QA /08/10/2015 7:35:36 AM
Page 3 of 9

GlobTek, Inc. www.globtek.com 186 Veterans Drive, Northvale, NJ 07647 Tel. (201) 784-1000 Fax (201) 784-0111	Drawing Title: GT-46200-2005-T3, ITE Power Supply, Efficiency Level: VI, Case Color/Style: GlobTek Black, Desktop/External, Regulated Switchmode AC-DC, Input Rating: 100-240V~, 50-60 Hz, IEC 60320/C14 , Output Rating: 20W, 5V@4A, Output Configuration: 1200 mm, 16/1C + Shield Cond, UL 1185, Female Barrel 5.5 * 2.5 * 11mm with internal Spring Clip and Locking Notch or Equal, Ferrite: Core Size: 14.2*28.5*8.2, GlobTek Black, GT Cord # C2224, Pin Out: Center Positive (+V), Blades/Input Cord: Not Applicable, Approvals: CE China RoHS GOST-R IP40 Level VI LPS PSE RoHS 2 Ukraine VCCI WEEE Class I	
	Model No. GT-46200-2005-T3	
	Part No. TR9CA4000LCP-N(R6B)	Rev C

INPUT CONFIGURATION

Blades/Cord Included: N/A: Not Applicable
Blades/Cord Installed: N/A: Not Applicable

IEC 60320/C14 AC Inlet Connector, Class I, Earth Ground

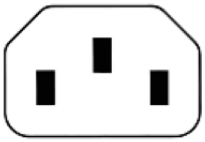

Mates with IEC 60320/C13 Plug

Standard International IEC 320/C13 Cordsets

Below are standard cordsets which are "not included" (unless stated above); these can be purchased separately or packaged with the power supply. Contact your Sales Engineer if the style required is not shown below. Many more available in different lengths, colors or cable material.

GlobTek P/N	Length	Country	Description
1191063F0701(R)	3 FT	North American Hospital	3 CONDUCTOR: SJT 18/3, 3 Ft., BLACK, UL/CSA, HOSPITAL NEMA 5-15P to IEC 320/C13
1191068F0701(R)	8 FT	North American Hospital	3 CONDUCTOR: SJT 18/3, 8 Ft., BLACK, UL/CSA, HOSPITAL NEMA 5-15P to IEC 320/C13
3021453F701(R)	3 FT	North American	3 CONDUCTOR: SVT 18/3, 3', BLACK, UL/CSA, NEMA 5-15P to IEC 320/C13
3021457F701(R)	**7 FT**	**North American**	**3 CONDUCTOR: SVT 18/3, 7', BLACK, UL/CSA, NEMA 5-15P to IEC 320/C13**
3021876F7701(R)	7 FT	North American	3 CONDUCTOR: SVT, Shielded, 18/3, 6' 7", BLACK, UL/CSA, NEMA 5-15P to IEC 320/C13
23144272M5701-T(R)	2.5 M	European	3 CONDUCTOR H05VVF, 3x1.00, 2.5M, CEE 7/7 to IEC 320/C13
PZ0800100-2M5BK13-H(R)	2.5 M	UK / Ireland	3 CONDUCTOR: H05VVF, 3x1.0, 2.5M, BSI, BS1363 to IEC 320/C13
5502022M5701A(R)	2.5 M	Australia	3 CONDUCTOR: GTSA 3x1.0, 2.5M, SAA, AS3112 to IEC 320/C13
3003068F2701-HK(R)	2.5 M	Japan	3 CONDUCTOR: VCTF, 3x 2.0, 2.5M, PSE, JIS8303 to IEC 320/C13
23214272M5701(R)	2.5 M	Swiss	3 CONDUCTOR: H05VVF 3x1.0, 2.5M, SEV, SEV 1011 to IEC 320/C13
23024272M5701(R)	2.5 M	Italy	3 CONDUCTOR: H05VVF 3x 1.00, 2.5M, IMQ, CEI 23-16/VII to IEC 320/C13
G8014272M5701(R)	2.5 M	Demark	3 CONDUCTOR: H05VVF 3x 1.00, 2.5M, D, AFSNIT 107-2-D1 to IEC 320/C13
2084272M5701(R)	2.5 M	India/ Africa	3 CONDUCTOR: H05VVF 3x1.0, 2.5M, BS546 to IEC 320/C13
6023602M5701(R)	2.5 M	China	3 CONDUCTOR: RVV, 3X1.0mm2, 2.5M, CCC, GB2099.1 (1996) to IEC 320/C13
377C4272M5701(R)	2.5 M	Israel	3 CONDUCTOR: H05VVF 3x 1.00, 2.5M, ISRAEL SI-32 to IEC 320/C13
7055002M5701(R)	2.5 M	International	3 CONDUCTOR: H05VVF 3x 1.00, 2.5M, IEC320/C14 to IEC 320/C13

GlobTek, Inc. www.globtek.com 186 Veterans Drive, Northvale, NJ 07647 Tel. (201) 784-1000 Fax (201) 784-0111	Drawing Title: GT-46200-2005-T3, ITE Power Supply, Efficiency Level: VI, Case Color/Style: GlobTek Black, Desktop/External, Regulated Switchmode AC-DC, Input Rating: 100-240V~, 50-60 Hz, IEC 60320/C14 , Output Rating: 20W, 5V@4A, Output Configuration: 1200 mm, 16/1C + Shield Cond, UL 1185, Female Barrel 5.5 * 2.5 * 11mm with internal Spring Clip and Locking Notch or Equal, Ferrite: Core Size: 14.2*28.5*8.2, GlobTek Black, GT Cord # C2224, Pin Out: Center Positive (+V), Blades/Input Cord: Not Applicable, Approvals: CE China RoHS GOST-R IP40 Level VI LPS PSE RoHS 2 Ukraine VCCI WEEE Class I	
	Model No. GT-46200-2005-T3	
	Part No. TR9CA4000LCP-N(R6B)	Rev C

OUTPUT CORD AND CONNECTOR: LCL/C2224

ACTUAL CONNECTORS, OVERMOLDS, FERRITES MAY VARY SLIGHTLY FROM THE PICTURE BELOW

CABLE TYPE	UL 1185
CABLE LENGTH (mm)	1200
CABLE TOLERANCE (mm)	+100-0
WIRE GAUGE (AWG)	16
CONDUCTORS	1C + Shield
HANK DIMENSION (mm)	80 ± 10
CABLE / CONNECTOR OVERMOLD COLOR	GlobTek Black
FERRITE TYPE / DIMENSION	Core Size: 14.2*28.5*8.2
FERRITE # OF TURNS (Definition)	2 Pass thru core (1 turns)
FERRITE DIMENSION FROM STRAIN RELIEF	50 ±10
FERRITE DIMENSION FROM PLUG	N/A
PLUG TYPE	Female Barrel 5.5 * 2.5 * 11mm with internal Spring Clip and Locking Notch or Equal
OVER MOLD ORIENTATION	Straight
CONNECTOR PIN OUT:	Center Positive (+V)
ADDITIONAL REQUIREMENTS	

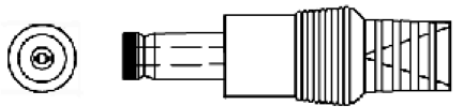

ADDITIONAL OUTPUT PLUG OPTIONS ARE AVAILABLE AT http://www.globtek.com/connectors.php
STANDARD PLUGS AND CONNECTORS CAN BE SEEN ONLINE AT http://www.globtek.com/connectors.php

GlobTek, Inc. www.globtek.com 186 Veterans Drive, Northvale, NJ 07647 Tel. (201) 784-1000 Fax (201) 784-0111	Drawing Title: GT-46200-2005-T3, ITE Power Supply, Efficiency Level: VI, Case Color/Style: GlobTek Black, Desktop/External, Regulated Switchmode AC-DC, Input Rating: 100-240V~, 50-60 Hz, IEC 60320/C14 , Output Rating: 20W, 5V@4A, Output Configuration: 1200 mm, 16/1C + Shield Cond, UL 1185, Female Barrel 5.5 * 2.5 * 11mm with internal Spring Clip and Locking Notch or Equal, Ferrite: Core Size: 14.2*28.5*8.2, GlobTek Black, GT Cord # C2224, Pin Out: Center Positive (+V), Blades/Input Cord: Not Applicable, Approvals: CE China RoHS GOST-R IP40 Level VI LPS PSE RoHS 2 Ukraine VCCI WEEE Class I	
	Model No. GT-46200-2005-T3	
	Part No. TR9CA4000LCP-N(R6B)	Rev C

LABEL:L-1186

LABEL P/N: Standard GT
MATERIAL: Flat Thermal Transfer, Imprintable, Polyester Label and/or Pad Printed and/or Molded, and/or Laser Engraved in the case
BACKGROUND COLOR: Black
TEXT COLOR: White or Silver or Gray
LABEL WIDTH (mm): 59.6
LABEL HEIGHT (mm): 39.6

Below is the minimum information which will appear on the label. NOTE: in the logo area additional/actual positioning of symbols and text is subjected to change as per agency updates/requirements or additional model approvals become available.

Regulatory certifications/label markings may be in logo area on the label or molded into the case housing outside the label area.
Information will be shown via label and/or pad printed and/or molded and/or laser engraved in the case. * Date code markings at GlobTek option.

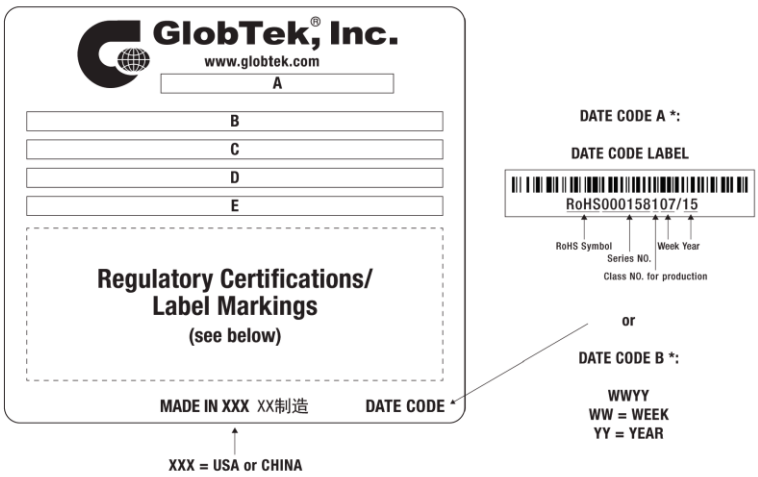

A=ITE Power Supply
B=P/N: (料号) TR9CA4000LCP-N(R6B)
C=Model (型号) GT-46200-2005-T3
D=Input (输入) 100-240V~, 50-60 Hz, 0.5 A
E=Output (產出) 5 V ⎓ 4 A

AGENCY ONLINE DOCUMENTS
IPXY rating is based on 3rd party testing and customers should check suitability and test system level IPXY rating before ordering.

Regulatory Certifications/Label Markings

Logo	Description
CE	CE Mark: tested to comply with EN55022:2006/A1:2007 Class B, EN610003-2, EN610003-3 including EN61000-4-2, EN61000-4-3, EN61000-4-4, EN61000-4-5, EN61000-4-6N EN61000-4-11; EMI: Complies with EN55011 CLASS B and FCC Part 15B - On label or Molded in case
30	CHINA SJ/T 11364-2014, China RoHS Chart: http://en.globtek.com/globtek-rohs.php

GlobTek, Inc. www.globtek.com 186 Veterans Drive, Northvale, NJ 07647 Tel. (201) 784-1000 Fax (201) 784-0111	Drawing Title: GT-46200-2005-T3, ITE Power Supply, Efficiency Level: VI, Case Color/Style: GlobTek Black, Desktop/External, Regulated Switchmode AC-DC, Input Rating: 100-240V~, 50-60 Hz, IEC 60320/C14 , Output Rating: 20W, 5V@4A, Output Configuration: 1200 mm, 16/1C + Shield Cond, UL 1185, Female Barrel 5.5 * 2.5 * 11mm with internal Spring Clip and Locking Notch or Equal, Ferrite: Core Size: 14.2*28.5*8.2, GlobTek Black, GT Cord # C2224, Pin Out: Center Positive (+V), Blades/Input Cord: Not Applicable, Approvals: CE China RoHS GOST-R IP40 Level VI LPS PSE RoHS 2 Ukraine VCCI WEEE Class I	
	Model No. GT-46200-2005-T3	
	Part No. TR9CA4000LCP-N(R6B)	Rev C

	Class I Earth Ground
	GOST-R mark for Russia(Document: http://www.globtek.com/html/iso_certificates/GT_GOST-R.pdf). February 10 2016. Due to lack of demand, GlobTek will not be renewing it's GOST certification. Please contact your sales engineer for pricing on EAC.
	Indoor Use Only - Mark is on the label or Molded in the case
IP40	Ingress Protection: IP40 to IEC60529:2001 Protection against granular foreign bodies
EFFICIENCY LEVEL VI	Efficiency: complies to section 301 of Energy Independence and Security Act (EISA) complies with Energy Star tier 2 (North America), ECP tier 2 (China), MEPS tier 2 (Australia), Code of Conduct (Europe)
LPS	Limited Power Source
GlobTek, Inc.	JAPAN TUV Rheinland-PSE GlobTek Inc to J60950-1(H26) , J55022(H22),J3000(H25).Please follow the procedure listed in the following link forproper import to Japan: http://en.globtek.com/importing-to-japan.php.
RoHS 2	RoHS 2: Complies with EU 2011/65/EU and CHINA SJ/T 11363-2006 http://www.ce-mark.com/Rohs%20final.pdf
1O139	Ukraine UKRSepro (Document: www.globtek.com/html/iso_certificates/GT_Ukraine.pdf)
	Japan: Voluntary Control Council for Interference (VCCI)
	WEEE: Complies with EU 2012/19/EU (http://ec.europa.eu/environment/waste/weee/index_en.htm) Mark is on the label or Molded in the case

Center Positive (+V)

GlobTek, Inc. www.globtek.com 186 Veterans Drive, Northvale, NJ 07647 Tel. (201) 784-1000 Fax (201) 784-0111	Drawing Title: GT-46200-2005-T3, ITE Power Supply, Efficiency Level: VI, Case Color/Style: GlobTek Black, Desktop/External, Regulated Switchmode AC-DC, Input Rating: 100-240V~, 50-60 Hz, IEC 60320/C14 , Output Rating: 20W, 5V@4A, Output Configuration: 1200 mm, 16/1C + Shield Cond, UL 1185, Female Barrel 5.5 * 2.5 * 11mm with internal Spring Clip and Locking Notch or Equal, Ferrite: Core Size: 14.2*28.5*8.2, GlobTek Black, GT Cord # C2224, Pin Out: Center Positive (+V), Blades/Input Cord: Not Applicable, Approvals: CE China RoHS GOST-R IP40 Level VI LPS PSE RoHS 2 Ukraine VCCI WEEE Class I	
	Model No. GT-46200-2005-T3	
	Part No. TR9CA4000LCP-N(R6B)	Rev C

PACKAGING

Packing Spec P/N:	Packing for GT-43090
Box Qty:	80
Gift Box Size (mm):	Egg Crate
Gift Box Color:	White
Master Carton Size (mm):	510*350*272
Master GW (Kg):	15.4 kg
BLADES INCLUDED:	N/A: Not Applicable
BLADE/CORD INSTALLED:	N/A: Not Applicable

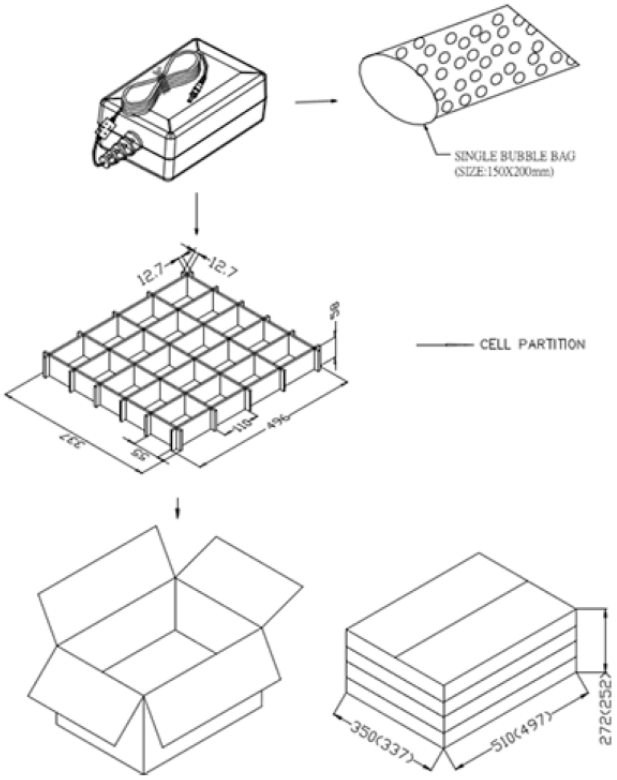

GlobTek, Inc. www.globtek.com 186 Veterans Drive, Northvale, NJ 07647 Tel. (201) 784-1000 Fax (201) 784-0111	Drawing Title: GT-46200-2005-T3, ITE Power Supply, Efficiency Level: VI, Case Color/Style: GlobTek Black, Desktop/External, Regulated Switchmode AC-DC, Input Rating: 100-240V~, 50-60 Hz, IEC 60320/C14 , Output Rating: 20W, 5V@4A, Output Configuration: 1200 mm, 16/1C + Shield Cond, UL 1185, Female Barrel 5.5 * 2.5 * 11mm with internal Spring Clip and Locking Notch or Equal, Ferrite: Core Size: 14.2*28.5*8.2, GlobTek Black, GT Cord # C2224, Pin Out: Center Positive (+V), Blades/Input Cord: Not Applicable, Approvals: CE China RoHS GOST-R IP40 Level VI LPS PSE RoHS 2 Ukraine VCCI WEEE Class I	
	Model No. GT-46200-2005-T3	
	Part No. TR9CA4000LCP-N(R6B)	Rev C

INSTRUCTION SHEET

N/A

GlobTek, Inc. www.globtek.com 186 Veterans Drive, Northvale, NJ 07647 Tel. (201) 784-1000 Fax (201) 784-0111	Drawing Title: GT-46200-2005-T2, ITE Power Supply, Efficiency Level: VI, Case Color/Style: GlobTek Black, Desktop/External, Regulated Switchmode AC-DC, Input Rating: 100-240V~, 50-60 Hz, IEC 60320/C14 , Output Rating: 20W, 5V@4A, Output Configuration: 1200 mm, 16/1C + Shield Cond, UL 1185, Female Barrel 5.5 * 2.5 * 11mm with internal Spring Clip and Locking Notch or Equal, Ferrite: Core Size: 14.2*28.5*8.2, GlobTek Black, GT Cord # C2224, Pin Out: Center Positive (+V), Blades/Input Cord: Not Applicable, Approvals: CE China RoHS GOST-R IP40 Level VI LPS PSE RoHS 2 Ukraine VCCI WEEE Double Insulation	
	Model No. GT-46200-2005-T2	
	Part No. TR9KA4000LCP-N(R6B)	Rev C

REVISION HISTORY

REV	DESCRIPTION	SUB	DATE	APPROVED
C	Update O/P cord from 18AWG/1830 mm to 16/1200 mm	QA	06/01/2015	QA
B	Change approval: ground to double box	QA	05/22/2015	QA
A	Initia release	QA	05/13/2015	QA

In Addition to GlobTek Inc.'s renewed ISO9001:2008 - Quality Management System Certification, GlobTek Inc. is now certified to:

ISO13485:2003 - Medical Devices Quality Management System Certification
ISO14001:2004 - Environmental Management System Certification

ISO Certificates are available On-Line at http://www.globtek.com/iso-certificates.php

Customer Approval of Specification:

Please approve, sign and send back to GlobTek so we can complete order processing.
A delay in receipt of this form will delay delivery schedule.
Company Name:
Customer P/N:
Quote Number:
Date:
Authorized Representative Name:

Authorized Representative Signature:

The acceptance of this specification and use of the product described in this document indicates the acceptance and binding of the customer to Globtek terms and conditions, which supersede all other agreements, terms, and conditions (http://en.globtek.com/terms-and-conditions/).

Footnote:

GlobTek Inc. will not be liable for the safety and performance of these power supplies if unauthorized access and repair occurs. End user should consult applicable UL, CSA or EN standards for proper installation instruction.

Limitation of Use:

GlobTek product are not authorized for use as mission critical components in life support hazardous environment, nuclear or aircraft applications without prior written approval from the CEO of GlobTek Inc.
Contents of this document are subject to change without prior notice.

RELEASED
By N.Frost at 9:25 am, Jul 10, 2015

GT-46200-2005-T2, 20W, 5V@4A, Desktop/External, Regulated Switchmode AC-DC

GlobTek, Inc. www.globtek.com 186 Veterans Drive, Northvale, NJ 07647 Tel. (201) 784-1000 Fax (201) 784-0111	Drawing Title: GT-46200-2005-T2, ITE Power Supply, Efficiency Level: VI, Case Color/Style: GlobTek Black, Desktop/External, Regulated Switchmode AC-DC, Input Rating: 100-240V~, 50-60 Hz, IEC 60320/C14 , Output Rating: 20W, 5V@4A, Output Configuration: 1200 mm, 16/1C + Shield Cond, UL 1185, Female Barrel 5.5 * 2.5 * 11mm with internal Spring Clip and Locking Notch or Equal, Ferrite: Core Size: 14.2*28.5*8.2, GlobTek Black, GT Cord # C2224, Pin Out: Center Positive (+V), Blades/Input Cord: Not Applicable, Approvals: CE China RoHS GOST-R IP40 Level VI LPS PSE RoHS 2 Ukraine VCCI WEEE Double Insulation	
	Model No. GT-46200-2005-T2	
	Part No. TR9KA4000LCP-N(R6B)	Rev C

POWER SUPPLY INFORMATION

TYPE:	Desktop/External
TECHNOLOGY:	Regulated Switchmode AC-DC
CASE COLOR:	GlobTek Black
NAMEPLATE RATED INPUT:	100-240V~, 50-60 Hz, 0.5 A
INPUT CONFIG:	IEC 60320/C14
WATTS:	20.0
VOLTS OUT:	5
CURRENT OUT (Amps):	4
BLADE/CORD INCLUDED:	N/A: Not Applicable
BLADE/CORD INSTALLED:	N/A: Not Applicable
EFFICIENCY LEVEL:	VI
OUTPUT CONFIGURATION	1200 mm, 16/1C + Shield Cond, UL 1185, Female Barrel 5.5 * 2.5 * 11mm with internal Spring Clip and Locking Notch or Equal, Ferrite: Core Size: 14.2*28.5*8.2, GlobTek Black, GT Cord # C2224
CONNECTOR PIN OUT:	Center Positive (+V)
LABEL SPECS:	Standard GT,L-1186
PACK SPEC:	Packing for GT-43090

NOTES / DEVIATIONS:

DIMENSIONS ARE IN MM UNLESS SPECIFIED OTHERWISE.

ELECTRICAL SPECIFICATIONS

A) ELECTRICAL SPECIFICATIONS:
01. Input Voltage: Specified 90-264 Vac, Nameplate rated: 100-240Vac
02. Input Frequency: Specified 47-63 Hz, Nameplate rated 50-60Hz
03. Inrush Current: 50A Max. at 115VAC cold start, 100A Max. at 230VAC cold start
04. Average Efficiency: 82.44% Min (CEC & DOE LEVEL VI Compliant), 82.97% Min (ErP Tier2 Compliant)
05. Input power(no load): <0.1W (CEC & DOE LEVEL VI Compliant), <0.075W (ErP Tier2 Compliant)
07. Output Voltage toterance: ±5%
08.Load regulation: ±5%
09. Output Voltage: Tolerance ± 5%
10. Turn On Delay: 3000 mS MAX at 115 VAC Full Load
11. Hold Up Time: 10 mS Min at 100 VAC Full Load
12. Ripple Voltage: 150mV (p-p): Input :(100V-240VAC), Output:full load
Measuring is done by 20MHz bandwidth oscilloscope and terminated each output with a 10uF aluminum electrolytic capacitor and 0.1uF ceramic capacitor.

B) PROTECTION
01. Over voltage protection: protection zener
02. Short circuit protection: Output shut down and auto- recover
03.Over Load Protection: Output shut down and auto restart

C) SAFETY
01. HI-POT : Input to output : 1500VAC or 2121VDC 10mA 1 minute
02.Leakage Current: <0.35mA
03. Insulation resistance: Input to output: 500vdc to test the input to output resistance not be less 100M ohm

D) OTHER:
01. MTBF: 200,000 Hours @ 25°C ambient temperature
02. Operating Temperature: 0°C to 40°C ambient temperature
03. Humidity Operating : 20% to 80%. 0% to 90% relative humidity
04. Storage Temperature: -10°C to 70°C
Humidity Storage: 10% to 90%

GlobTek, Inc. www.globtek.com 186 Veterans Drive, Northvale, NJ 07647 Tel. (201) 784-1000 Fax (201) 784-0111	Drawing Title: GT-46200-2005-T2, ITE Power Supply, Efficiency Level: VI, Case Color/Style: GlobTek Black, Desktop/External, Regulated Switchmode AC-DC, Input Rating: 100-240V~, 50-60 Hz, IEC 60320/C14 , Output Rating: 20W, 5V@4A, Output Configuration: 1200 mm, 16/1C + Shield Cond, UL 1185, Female Barrel 5.5 * 2.5 * 11mm with internal Spring Clip and Locking Notch or Equal, Ferrite: Core Size: 14.2*28.5*8.2, GlobTek Black, GT Cord # C2224, Pin Out: Center Positive (+V), Blades/Input Cord: Not Applicable, Approvals: CE China RoHS GOST-R IP40 Level VI LPS PSE RoHS 2 Ukraine VCCI WEEE Double Insulation	
	Model No. GT-46200-2005-T2	
	Part No. TR9KA4000LCP-N(R6B)	Rev C

05. RoHS 2: Complies with EU 2011/65/EU andChina SJ/T 11364-2014

E) ENCLOSURE
01. Housing: High impact plastic, 94V0 polycarbonate, non-vented
02. Size: 80.0 x 50.0 x 310 +/-1.0 mm

04. Markings: Label and/or Pad Printed and/or Molded in the case

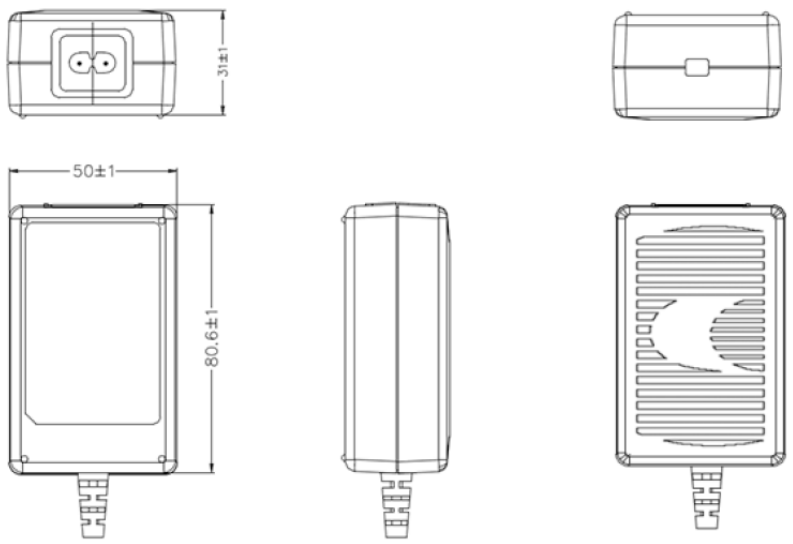

DERATING CURVE

N/A

GlobTek, Inc. www.globtek.com 186 Veterans Drive, Northvale, NJ 07647 Tel. (201) 784-1000 Fax (201) 784-0111	Drawing Title: GT-46200-2005-T2, ITE Power Supply, Efficiency Level: VI, Case Color/Style: GlobTek Black, Desktop/External, Regulated Switchmode AC-DC, Input Rating: 100-240V~, 50-60 Hz, IEC 60320/C14 , Output Rating: 20W, 5V@4A, Output Configuration: 1200 mm, 16/1C + Shield Cond, UL 1185, Female Barrel 5.5 * 2.5 * 11mm with internal Spring Clip and Locking Notch or Equal, Ferrite: Core Size: 14.2*28.5*8.2, GlobTek Black, GT Cord # C2224, Pin Out: Center Positive (+V), Blades/Input Cord: Not Applicable, Approvals: CE China RoHS GOST-R IP40 Level VI LPS PSE RoHS 2 Ukraine VCCI WEEE Double Insulation	
	Model No. GT-46200-2005-T2	
	Part No. TR9KA4000LCP-N(R6B)	Rev C

INPUT CONFIGURATION

Blades/Cord Included: N/A: Not Applicable
Blades/Cord Installed: N/A: Not Applicable

IEC 60320/C8 AC Inlet connector, Class II, Non-Earth Ground (aka "Figure-8")

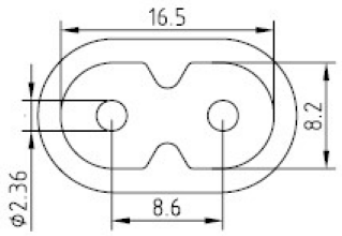

Mates with IEC 60320/C7 Plug

Standard International IEC 320/C7 Cordsets

Below are standard cordsets which are "not included" (unless stated above); these can be purchased separately or packaged with the power supply. Contact your Sales Engineer if the style required is not shown below. Many more available in different lengths, colors or cable material.

GlobTek P/N	Length	Country	Description
4511116F703A(R)	**6 FT**	**North American**	**2 COND: SPT-2, 18/2, 6', BLACK, UL/CSA, NEMA 1-15P to IEC 320/C7**
2074112M8703A(R)	2 M	European	2 COND: H05VVH2F, 2X0.75, 1.8M, VDE, S, N, D, ect., CEE 7/16 to IEC 320/C7
5014112M703A(R)	2 M	Australia	2 COND: H05VVH2F, 2X0.75, 2M, SAA, AS3112 to IEC 320/C7
451J3401M8703A(R)	2 M	Japan	2 COND: VFF, 2X0.75mm2, 1.8M, PSE, JIS8303 to IEC 320/C7
6104112M703A(R)	2 M	UK/Ireland	2 COND: H03VVH2F, 2X0.75, 2M, BSI, BS1363 to IEC 320/C7
2074112M8703A(R)	2 M	Swiss	2 COND: H03VVH2F, 2X0.75, 1.8M, SEV, CEE 7/16 to IEC 320/C7
2074112M8703A(R)	2 M	Italy	2 COND: H03VVH2F, 2X0.75, 1.8M, IMQ, CEE 7/16 to IEC 320/C7
2074112M8703A(R)	2 M	Demark	2 COND: H03VVH2F, 2X0.75,1.8M, D, CEE 7/16 to IEC 320/C7
2084111M8703(R)	2 M	India/ Africa	2 COND: H05VVF 3x0.75, 1.8M, BS546 to IEC 320/C7 (YL-H03VVH2-F)
4533501M8703(R)	2 M	China	2 COND: RVV (227IEC52), 2X0.75mm2, 1.8M, CCC, GB2099.1 (1996) to IEC 320/C7

GlobTek, Inc. www.globtek.com 186 Veterans Drive, Northvale, NJ 07647 Tel. (201) 784-1000 Fax (201) 784-0111	Drawing Title: GT-46200-2005-T2, ITE Power Supply, Efficiency Level: VI, Case Color/Style: GlobTek Black, Desktop/External, Regulated Switchmode AC-DC, Input Rating: 100-240V~, 50-60 Hz, IEC 60320/C14 , Output Rating: 20W, 5V@4A, Output Configuration: 1200 mm, 16/1C + Shield Cond, UL 1185, Female Barrel 5.5 * 2.5 * 11mm with internal Spring Clip and Locking Notch or Equal, Ferrite: Core Size: 14.2*28.5*8.2, GlobTek Black, GT Cord # C2224, Pin Out: Center Positive (+V), Blades/Input Cord: Not Applicable, Approvals: CE China RoHS GOST-R IP40 Level VI LPS PSE RoHS 2 Ukraine VCCI WEEE Double Insulation	
	Model No. GT-46200-2005-T2	
	Part No. TR9KA4000LCP-N(R6B)	Rev C

OUTPUT CORD AND CONNECTOR: LCL/C2224

ACTUAL CONNECTORS, OVERMOLDS, FERRITES MAY VARY SLIGHTLY FROM THE PICTURE BELOW

CABLE TYPE	UL 1185
CABLE LENGTH (mm)	1200
CABLE TOLERANCE (mm)	+100-0
WIRE GAUGE (AWG)	16
CONDUCTORS	1C + Shield
HANK DIMENSION (mm)	80 ± 10
CABLE / CONNECTOR OVERMOLD COLOR	GlobTek Black
FERRITE TYPE / DIMENSION	Core Size: 14.2*28.5*8.2
FERRITE # OF TURNS (Definition)	2 Pass thru core (1 turns)
FERRITE DIMENSION FROM STRAIN RELIEF	50 ±10
FERRITE DIMENSION FROM PLUG	N/A
PLUG TYPE	Female Barrel 5.5 * 2.5 * 11mm with internal Spring Clip and Locking Notch or Equal
OVER MOLD ORIENTATION	Straight
CONNECTOR PIN OUT:	Center Positive (+V)
ADDITIONAL REQUIREMENTS	

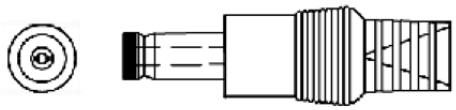

ADDITIONAL OUTPUT PLUG OPTIONS ARE AVAILABLE AT http://www.globtek.com/connectors.php
STANDARD PLUGS AND CONNECTORS CAN BE SEEN ONLINE AT http://www.globtek.com/connectors.php

GlobTek, Inc. www.globtek.com 186 Veterans Drive, Northvale, NJ 07647 Tel. (201) 784-1000 Fax (201) 784-0111	Drawing Title: GT-46200-2005-T2, ITE Power Supply, Efficiency Level: VI, Case Color/Style: GlobTek Black, Desktop/External, Regulated Switchmode AC-DC, Input Rating: 100-240V~, 50-60 Hz, IEC 60320/C14 , Output Rating: 20W, 5V@4A, Output Configuration: 1200 mm, 16/1C + Shield Cond, UL 1185, Female Barrel 5.5 * 2.5 * 11mm with internal Spring Clip and Locking Notch or Equal, Ferrite: Core Size: 14.2*28.5*8.2, GlobTek Black, GT Cord # C2224, Pin Out: Center Positive (+V), Blades/Input Cord: Not Applicable, Approvals: CE China RoHS GOST-R IP40 Level VI LPS PSE RoHS 2 Ukraine VCCI WEEE Double Insulation	
	Model No. GT-46200-2005-T2	
	Part No. TR9KA4000LCP-N(R6B)	Rev C

LABEL:L-1186

LABEL P/N: Standard GT
MATERIAL: Flat Thermal Transfer, Imprintable, Polyester Label and/or Pad Printed and/or Molded, and/or Laser Engraved in the case
BACKGROUND COLOR:Black
TEXT COLOR: White or Silver or Gray
LABEL WIDTH (mm): 59.6
LABEL HEIGHT (mm): 39.6

Below is the minimum information which will appear on the label. NOTE: in the logo area additional/actual positioning of symbols and text is subjected to change as per agency updates/requirements or additional model approvals become available.

Agency logos may be in Logo area on the label or molded into the case housing outside the label area.
Information will be shown via Label and/or Pad Printed and/or Molded, and/or Laser Engraved in the case.

A=ITE Power Supply
B=P/N: (料号) TR9KA4000LCP-N(R6B)
C=Model : (型号) GT-46200-2005-T2
D=Input : (输入) 100-240V~, 50-60 Hz, 0.5 A
E=Output : (输出) 5 V ⎓ 4 A

AGENCY ONLINE DOCUMENTS
IPXY rating is based on 3rd party testing and customers should check suitability and test system level IPXY rating before ordering.

Logo Approvals

Logo	Description
CE	CE Mark: tested to comply with EN55022:2006/A1:2007 Class B, EN610003-2, EN610003-3 including EN61000-4-2, EN61000
30	CHINA SJ/T 11364-2014, China RoHS Chart: http://en.globtek.com/globtek-rohs.php

QA /07/10/2015 7:29:46 AM
Page 6 of 9

GlobTek, Inc. www.globtek.com 186 Veterans Drive, Northvale, NJ 07647 Tel. (201) 784-1000 Fax (201) 784-0111	Drawing Title: GT-46200-2005-T2, ITE Power Supply, Efficiency Level: VI, Case Color/Style: GlobTek Black, Desktop/External, Regulated Switchmode AC-DC, Input Rating: 100-240V~, 50-60 Hz, IEC 60320/C14 , Output Rating: 20W, 5V@4A, Output Configuration: 1200 mm, 16/1C + Shield Cond, UL 1185, Female Barrel 5.5 * 2.5 * 11mm with internal Spring Clip and Locking Notch or Equal, Ferrite: Core Size: 14.2*28.5*8.2, GlobTek Black, GT Cord # C2224, Pin Out: Center Positive (+V), Blades/Input Cord: Not Applicable, Approvals: CE China RoHS GOST-R IP40 Level VI LPS PSE RoHS 2 Ukraine VCCI WEEE Double Insulation	
	Model No. GT-46200-2005-T2	
	Part No. TR9KA4000LCP-N(R6B)	Rev C

Double Insulation - Mark is on the label or Molded in the case

GOST-R mark for Russia(Document: http://www.globtek.com/html/iso_certificates/GT_GOST-R.pdf)

Indoor Use Only - Mark is on the label or Molded in the case

IP40 Ingress Protection: IP40 to IEC60529:2001 Protection against granular foreign bodies (with I/P cord)

EFFICIENCY LEVEL VI Efficiency: complies to section 301 of Energy Independence and Security Act (EISA) complies with Energy Star tier 2 (North Am

LPS Limited Power Source

GlobTek, Inc. JAPAN TUV Rheinland-PSE GlobTek Inc to J60950-1(H26) , J55022(H22),J3000(H25).

RoHS 2 RoHS 2: Complies with EU 2011/65/EU and CHINA SJ/T 11363-2006 http://www.ce-mark.com/Rohs%20final.pdf

1O139 Ukraine UKRSepro (Document: www.globtek.com/html/iso_certificates/GT_Ukraine.pdf)

Japan: Voluntary Control Council for Interference (VCCI)

WEEE: Complies with EU 2012/19/EU (http://ec.europa.eu/environment/waste/weee/index_en.htm)
Mark is on the label or Molded in the case

Center Positive (+V)

GlobTek, Inc. www.globtek.com 186 Veterans Drive, Northvale, NJ 07647 Tel. (201) 784-1000 Fax (201) 784-0111	Drawing Title: GT-46200-2005-T2, ITE Power Supply, Efficiency Level: VI, Case Color/Style: GlobTek Black, Desktop/External, Regulated Switchmode AC-DC, Input Rating: 100-240V~, 50-60 Hz, IEC 60320/C14 , Output Rating: 20W, 5V@4A, Output Configuration: 1200 mm, 16/1C + Shield Cond, UL 1185, Female Barrel 5.5 * 2.5 * 11mm with internal Spring Clip and Locking Notch or Equal, Ferrite: Core Size: 14.2*28.5*8.2, GlobTek Black, GT Cord # C2224, Pin Out: Center Positive (+V), Blades/Input Cord: Not Applicable, Approvals: CE China RoHS GOST-R IP40 Level VI LPS PSE RoHS 2 Ukraine VCCI WEEE Double Insulation	
	Model No. GT-46200-2005-T2	
	Part No. TR9KA4000LCP-N(R6B)	Rev C

PACKAGING

Packing Spec P/N:	Packing for GT-43090
Box Qty:	80
Gift Box Size (mm):	Egg Crate
Gift Box Color:	White
Master Carton Size (mm):	510*350*272
Master GW (Kg):	15.4 kg
BLADES INCLUDED:	N/A: Not Applicable
BLADE/CORD INSTALLED:	N/A: Not Applicable

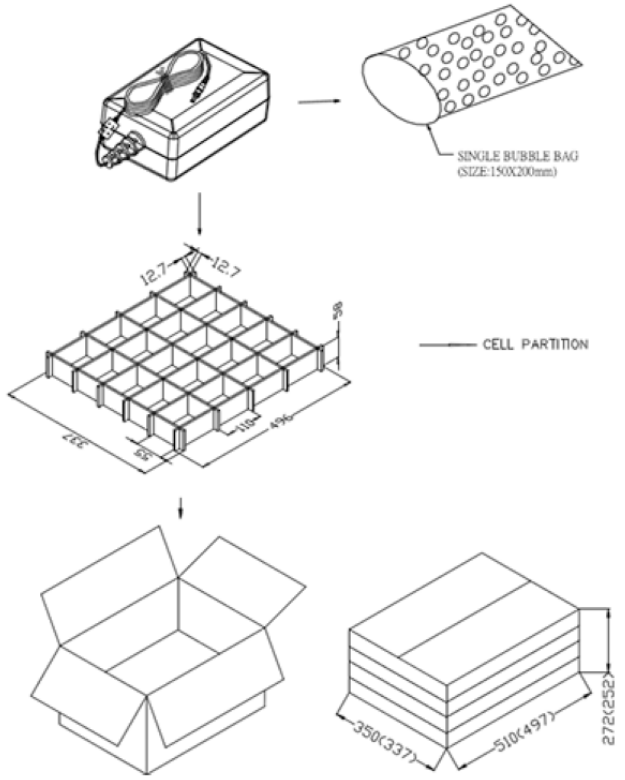

GlobTek, Inc. www.globtek.com 186 Veterans Drive, Northvale, NJ 07647 Tel. (201) 784-1000 Fax (201) 784-0111	Drawing Title: GT-46200-2005-T2, ITE Power Supply, Efficiency Level: VI, Case Color/Style: GlobTek Black, Desktop/External, Regulated Switchmode AC-DC, Input Rating: 100-240V~, 50-60 Hz, IEC 60320/C14 , Output Rating: 20W, 5V@4A, Output Configuration: 1200 mm, 16/1C + Shield Cond, UL 1185, Female Barrel 5.5 * 2.5 * 11mm with internal Spring Clip and Locking Notch or Equal, Ferrite: Core Size: 14.2*28.5*8.2, GlobTek Black, GT Cord # C2224, Pin Out: Center Positive (+V), Blades/Input Cord: Not Applicable, Approvals: CE China RoHS GOST-R IP40 Level VI LPS PSE RoHS 2 Ukraine VCCI WEEE Double Insulation	
	Model No. GT-46200-2005-T2	
	Part No. TR9KA4000LCP-N(R6B)	Rev C

INSTRUCTION SHEET

N/A