TEST REPORT EN 50075
Especially for plug-in adaptors

Product	Plug for power adapter (Standard sheet I of EN 50075)
Name and address of the applicant	GlobTek, Inc. 186 Veterans Dr. Northvale, NJ 07647 USA
Name and address of the manufacturer	GlobTek, Inc. 186 Veterans Dr. Northvale, NJ 07647 USA
Rating and principal characteristics	2.5A, 250V~ Cl.II
Trade mark (If any)	GlobTek
Model/type	Q-EU (adapter model: GT-41060ZWWVV-X.X)
Additional information	--
Tested according to	EN 50075 : 1990
Name and address of the testing laboratory	Nemko Nemko Shanghai Ltd 7th Floor, Building 1, No.2007 Hongmei Road Xuhui Disctrict, Shanghai, China Telephone +86 21 5445 3132 Fax +86 21 5445 3215
Test sample(s) received Tested in period	2011-06-10 2011-07-04 to 2011-07-12. The test results relate only to the sample(s) tested.
Tested by	Signature: Lance Lei Date: 2011-07-14 Name in block letters
Verified by	Signature: Willy Ong Date: 2011-07-14 Name in block letters

General remarks:	
Description of equipment under test:	
Type of accessory:	Removable plug of AC adapter
Standard sheet:	Standard Sheet I (EN50075)

Copy of marking plate:

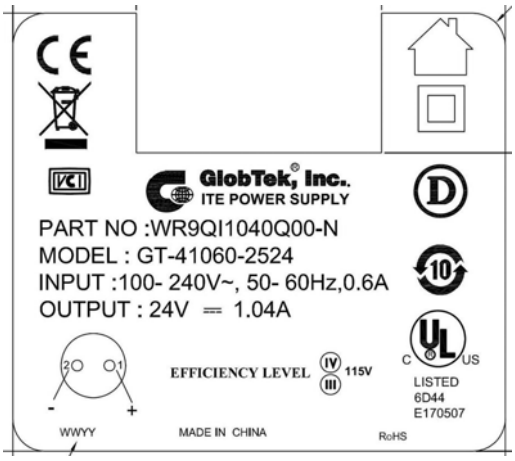

Photo:

Throughout this report a comma is used as the decimal separator.

Possible test case verdicts:
P = Pass, **F** = Fail, **N** = Not applicable. Placed in the column to the right (Verdict)

Tested according to additional information:

Additional information:

This test report always as an appended report of IEC/EN 60950-1, report no. 175959.

Name and address production-sites (factories):

GlobTek, Inc.
186 Veterans Dr. Northvale, NJ 07647 USA

GlobTek (Suzhou) Co., Ltd
Building 4, No. 76, Jin Ling East Rd., Suzhou Industrial Park, Suzhou,JiangSu 215021, China

List of appendixes / enclosures to the test report:

Measurement of Dimensions

Clause	Requirement - Test	Result - Remark	Verdict
6	**MARKING**		
6.1	– Rated current	2.5A (0.6A marked on the marking plate of power adapter)	**P**
	– Rated voltage	250V (100-240V marked on the marking plate of power adapter)	**P**
	– Nature of supply	~	**P**
	– Maker's name or trade mark or responsible vendor	GlobTek	**P**
	– Type reference	Q-EU	**P**
6.4	Marking shall be indelible and easily legible		
	- 15s water	The marking withstands required tests.	**P**
	- 15s hexane	The marking withstands required tests.	**P**
7	**DIMENSIONS**		
	Compliance with Standard Sheet 1	See page 7 for detail	**P**
	Gauges of figures 1 and 2		**P**
8	**PROTECTION AGAINST ELECTRIC SHOCK**		
8.1	Applying a force of 75N for 60s on insulating material could impair the safety of plug		**P**
	Plug shall not deform and no live part shall be accessible		**P**
8.2	Not possible to make connection between a pin of plug and a live socket contact of a socket-outlet while the other pin shall be accessible		**P**
	Checked by means of the gauge of figure 4		**P**
8.3	External parts of plugs, with the exception of the pins, shall be of insulating material		**P**
9	**CONSTRUCTION**		
9.5	Effective permanent connections:		**P**
	Screwed or snap-on connections shall not be used. According to IEC 60884-2-5 screwed or snap-on connection is allowed		**P**
9.6	Gripping operation:		
	length ≥ 55mm or	Accessory can be withdrawn through the enclosure without having to pull the wire	**P**
	indent(s) - ball ϕ 12mm		**N**

Clause	Requirement - Test	Result - Remark	Verdict
10	**RESISTANCE TO HUMIDITY**		
	Plugs shall be proof against humidity		P
	No damage after 48 h in a humidity cabinet		P
11	**INSULATION RESISTANCE AND ELECTRIC STRENGTH**		
	Plugs shall have adequate insulation resistance		P
11.1	The insulation resistance and the electric strength of plugs shall be adequate		P
	- insulation resistance ≥ 5 MΩ (500 V, 1 min)	100 MΩ	P
11.2	- electric strength test (2000 V, 1 min): No flashover or breakdown shall occur		P
13	**MECHANICAL STRENGTH**		
	Plugs shall have adequate mechanical strength:		P
13.2	- tumbling barrel test (Fig. 8)		P
	Tumbling barrel No. of falls: (50 if the specimen does not exceed 250g. 25 if the specimen exceeds 250g. IEC 60884-2-5:95)	50 falls	P
	- torque test on pins (0,4 Nm, 1 min)		P
13.3	- abrasion test (20.000 movements): no damage		P
13.4	Pull test with steel plate: 40N for 1 min. in heating cabinet 70 °C Displacement ≤ 1 mm		P
14	**RESISTANCE TO HEAT AND TO AGEING**		
14.1	The plug shall have sufficiently resistance		P
14.1.1	- heating test (100 °C, 1 min): no damage		P
14.2	Ageing test : 70±2°C 168 h		
	After the test: no visible crack		P
	no sticky or greasy material		P
	no damage		P
15	**CURRENT-CARRYING PARTS AND CONNECTIONS**		
15.1	Connections shall withstand the mechanical stresses occuring in normal use		P

Clause	Requirement - Test	Result - Remark	Verdict
15.2	Contact pressure shall not be transmitted through insulating material		P
15.3	Current-carrying parts shall be:		
	copper or		N
	alloy 58% or	>58% copper content	P
	alloy 50% or		N
	other metal no less suitable		N
	Current-carrying parts which may be subjected to mechanical wear, shall not be made of steel provided with an electroplated coating		P
16	**CREEPAGE DISTANCES, CLEARANCES AND DISTANCES THROUGH INSULATION**		
	Creepage distance between:		
	– live parts of different polarity 3 mm	>3mm	P
	– live parts and accessible metal parts 3 mm		N
	Clearances between:		
	– live parts of different polarity 3 mm	>3mm	P
	– live parts and accessible metal 3 mm		N
	For moulded-on: distance through insulating material ,between		
	– live parts and accessible surfaces 1,5 mm		P
17	**RESISTANCE OF INSULATING MATERIAL TO ABNORMAL HEAT AND TO FIRE**		
	Glow-wire test:		
	for parts of insulating material necessary to retain current-carrying parts in position	(x)750°C	
	for other parts	(x)650°C	
	– no visible flame		P
	– no sustained glowing and the flame shall extinguish within 30s		P
	– no ignition of the tissue paper		P

Measurement of Dimensions

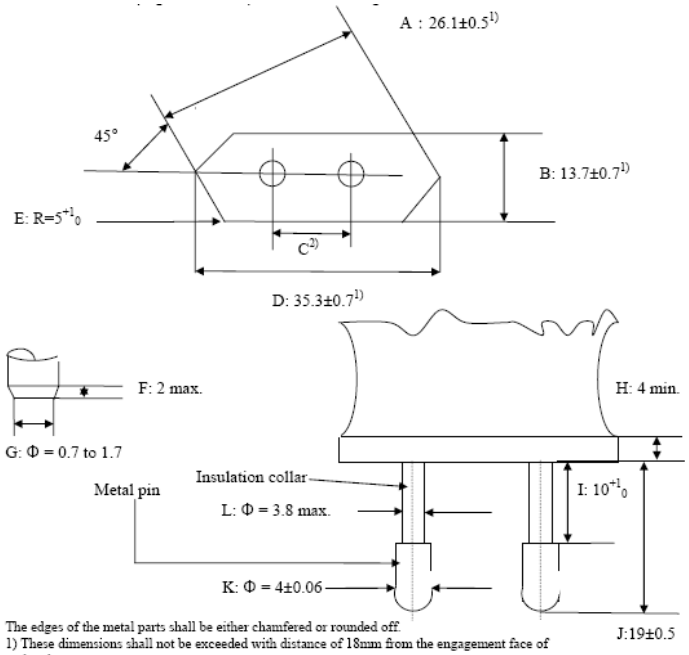

The edges of the metal parts shall be either chamfered or rounded off.
1) These dimensions shall not be exceeded with distance of 18mm from the engagement face of the plug
2) Dimension C is
C1: 18mm to 19.2mm in the plane of the engagement face;
C2: 17mm to 18mm at the ends of the pins.

Dimensions in millimeters

Item	Limit	measured
A	25.6mm to 26.6mm	25.96mm (at below 18mm from engagement face); 25.73mm (near engagement face)
B	13.0mm to 14.4mm	13.91mm (at below 18mm from engagement face); 13.53mm (near engagement face)
C1	18mm to 19.2mm	18.19mm
C2	17mm to 18mm	17.31mm
D	34.6mm to 36.0mm	35.09mm (at below 18mm from engagement face); 34.85mm (near engagement face)
E	R=5mm to 6mm	5.50mm
F	2mm max.	N/A

Item	Limit	measured
G	Φ = 0.7mm to 1.7mm	N/A
H	4mm min. (18mm min. for direct plug–in)	18.70mm
I	10mm to 11mm	10.15mm
J	18.5mm to 19.5mm	18.92mm
K	Φ=3.94mm to 4.06mm	Φ 3.99mm
L	Φ=3.8mm max. Φ=4.0mm max. for 4mm from engagement face	Φ 3.51mm Φ 3.92mm