中国认可
国际互认
检测
TESTING
CNAS L3110

TEST REPORT

Reference No.	:	WTX24D08184492Z
Applicant	:	GlobTek, Inc.
Address	:	186 Veterans Dr. Northvale, NJ 07647 USA
Manufacturer	:	GlobTek, Inc.
Address	:	186 Veterans Dr. Northvale, NJ 07647 USA
Product Name	:	Plug for Power supply
Model No	:	Q-UK
Standards	:	BS 1363-1:2016+A1:2018
Date of Receipt sample	:	2024-08-07
Date of Test	:	2024-08-07 to 2024-08-16
Date of Issue	:	2024-08-21
Test Result	:	The submitted samples comply with the above standards

Remarks:
The results shown in this test report refer only to the sample(s) tested, this test report cannot be reproduced, except in full, without prior written permission of the company. The report would be invalid without specific stamp of test institute and the signatures of compiler and approver.

Prepared By:
Waltek Testing Group Co., Ltd.
Address: No.77,Houjie Section, Guantai Road., Houjie Town, Dongguan City, Guangdong, China
Tel: +86-769-2267 6998
Fax: +86-769-2267 6828

Compiled by:

Dave Feng

Dave Feng / Project Engineer

Approved by:

Sam Qi

Sam Qi / Designated Reviewer

WALTEK TESTING GROUP CO.,LTD. WALTEK TEST REPORT

Test item description .....:	Plug for Power supply
Trademark .....:	GlobTek, Inc.
Model and/or type reference .....:	Q-UK
Serial number .....:	N/A
Rating(s).....:	N/A

General product information:

The product with models Q-UK is Plug with detachable UK Plug for Power supply.
The maximum ambient temperature specified by manufacturer is 40°C
Connector on detachable plug part with adaptor has been tested with the appliance according to
Table of critical components and materials:

Object / Part No.	Manufacturer / Trademark	Type / Model	Technical data	Standard	Mark(s) of conformity
Enclosure	SABIC JAPAN L L C	945(GG)	V-1,105°C, Min. thickness 2.0mm	UL 94, UL 746	Tested with appliance UL 207780
alternative	SABIC INNOVATIVE PLASTICS B V	945(GG)	V-1,105°C, Min. thickness 2.0mm	UL 94, UL 746	UL E45329
Plug lateral contacts	Interchangeable	Interchangeable	Cu>58%	BS 1363-1	Tested with appliance

Summary of testing:

We conclude that the products presented in this test report complies with BS 1363: part 1: 2016+A1:2018 according to the test results on the submitted samples.

Name and address of factory (ies):

GlobTek, Inc.
186 Veterans Dr. Northvale, NJ 07647 USA
GlobTek (Suzhou) Co., Ltd
Building 4, No. 76, Jin Ling East Rd., Suzhou Industrial Park, Suzhou,JiangSu 215021, China

Test case verdicts

Test case does not apply to the test object .....:	N (N/A)
Test item does meet the requirement……..:	P (Pass)
Test item does not meet the requirement ……:	F (Fail)

BS 1363-1:2016+A1:2018			
Clause	Requirement – Test	Result – Remark	Verdict
12	**Construction of Plugs**		**P**
12.1	The disposition of the pins shall be shown as figure 4.	The dispositions of the pins were shown as figure 4.	P
12.2	Pin and sleeve dimensions, body outline were checked according to figure 4 of BS1363: Part 1.	(It shall not less than 6.35 mm)	N/A
		The dimensions werefound within the specified limits as shown in figure 4.	P
	The plug portion shall enter the gauge fully with a force less than 10N was applied to the centre of the sample at right angle	Sample could enter into the gauge fully with a force less than 10 N.	P
12.3	No parts of a line or neutral pin shall be less than 9.5mm from the periphery of the plug measured along the engagement surface.	Complied.	P
12.9	Plug pins were constructed of brassor nickel plated brass	Complied.	P
12.9.1	Exposed surface of plug pins were smooth and free from burrs or sharp edges and other irregularities, which could cause damage or excessive wear to sockets or shutters.	Complied.	P
12.9.4	The adaptor plug pins were tested as specified in the standard.	For solid pins:1100N applied; For non-solid pins:800N 50 times. (tested on contact surface) Test on L, N pin separately. After the test, the plug could entry the gauge fully with a force less than 10N.	P
12.9.5	Plugs with nickel plated brass shall not cause excessive wear to socket contacts or shutters of socket-outlets.		N/A
	Each plug is inserted into and withdrawn from the socket-outlet at a rate of six insertions and six withdrawals per minute, the speed of travel of the plug being approximately 150 mm/s. The periods during which the plug is inserted and withdrawn shall be approximately equal. The plug pins are renewed or a new plug is used after each 5 000 insertions and withdrawals.		N/A
12.9.6	Each pin of the adapter was subjected to a torque of 1Nm for 60s as specified in the standard.	After the test, the pin portion could fit the relevant gauge.	P
12.11	The adaptors were tested as specified in standard. After being placed in an oven at 70°C for 1 hour, each pin of the samples was subjected for 60s to a pull of 100N in the oven.	After the test, no plug pin was detached and the plug pins could fit the relevant gauge.	P
12.12	The degree of the flexibility of mounting of the plug pins was checked by inspection	Complied.	P

BS 1363-1:2016+A1:2018			
Clause	Requirement – Test	Result – Remark	Verdict
12.13	Suitable means shall be provided for withdrawing the plug without subjecting the flexible cord to stress.		N/A
12.16	Line and neutral plug pin shall be fitted with insulating sleeves. The dimensions of the pin and sleeve shall fall within the specific limit.	Both line and neutral pins were fitted with insulating sleeve.	P
12.17.1	Plug pin sleeve shall be compliance with 12.17.2 to 12.17.4	Complied.	P
12.17.2	Electric strength test applied between the metal part of the plug pin and the sleeve. (1250V±30V for 60s)		P
12.17.3	Abrasion test for plug pin sleeve The plug pin sleeves were subjected to 20000 movements of abrasion as specified in the standard.	After the test, the sleeves showed no damage that impaired further use and could satisfy the electric strength test in 12.17.2	P
12.17.4	Resistance to deformation The plug pins with sleeves were placed in a heating cabinet at 200°C and tested according to the standard for 120min.	After the test carried out at 120 °C for 120 min, only slightly impression observed, the impressions were less than 50 % of the thickness measured before the test.	P
22.2	Parts of insulating material shall be sufficiently resistant to heat and still shaving its location and function.	Complied. See 22.2.1	P
22.2.1	Compliance checked as follows: a) Parts of ceramic material are used; b) external parts of plugs tested according to 22.1.3; c) all other parts of insulating material including ISOD subjected to the ball pressure at a temperature of 75°C ± 5°C	See appended table 22.2.1	P
23	Resistance to abnormal heat, fire and tracking		P
23.1	Plugs shall be proof against abnormal heat, fire and tracking		P
23.1.1	Compliance shall be checked by the test described in 23.2		P
23.2	Glow-wire test The test is performed according to BS EN 60695-2-11:2014and at the test temperature given in Table 10 a)Parts necessary to retain live parts in position including ISOD were tested at 750°C. b)Parts not necessary to retain live in position were tested at 650°C.	See appended table 23.2	P

BS 1363-1:2016+A1:2018			
Clause	Requirement – Test	Result – Remark	Verdict
Additional Requirements (Clause 12.2, 12.9.4.3, 12.9.5, 12.9.6,22.2 and 23) for the ISOD According to the standard BS 1363: Part 1: 2018			
12.2	Solid insulated shutter opening device should comply all the dimensions specified in Figure 4 with exception of the width of the ISOD should be 4.05mm maximum and 3.90mm minimum. and its height which should be 8.05mm maximum and 7.75mm minimum	The measured dimensions were found to be within the specified limits. (see attached appendix 1 for details)	P
12.9.4	Solid insulated shutter opening device were tested as specified in the standard.	After subjected to a force of 400N, the pin portion still could fit the relevant gauge.	P
12.9.5	Plugs with ISOD shall not cause excessive wear to socket contacts or shutters of socket-outlets.	See below	P
	Each plug is inserted into and withdrawn from the socket-outlet at a rate of six insertions and six withdrawals per minute, the speed of travel of the plug being approximately 150 mm/s. The periods during which the plug is inserted and withdrawn shall be approximately equal. The plug pins are renewed or a new plug is used after each 5 000 insertions and withdrawals.	The socket-outlet show no sign of damage that would impair further use. The plugs show no damage and conform to the dimensional requirements of 12.2. The shutters of the socket-outlet operate satisfactorily and the socket contacts shall be safely shielded.	P
12.9.6	ISOD of the adapter was subjected to a torque of 1Nm for 60s as specified in the standard.	After the test, the pin portion could fit the relevant gauge.	**P**

22.2.1	**TABLE: Ball-pressure test**						
Specimen				Ball-pressure test			
Part	Material	Material-thickness [mm]	Colour	[C°]	Measured [mm]	Required [mm]	Result
L/N pin sleeving material	SABIC JAPAN L L C	2.0	Black	75	0.8	< 2.0	Pass
ISODs pin material	SABIC JAPAN L L C	4.04	Black	75	0.7	< 2.0	Pass
Plastic enclosure	SABIC JAPAN L L C	2.0	Black	75	0.8	< 2.0	Pass
Supplementary information:							

BS 1363-1:2016+A1:2018			
Clause	Requirement – Test	Result – Remark	Verdict

23.2	**TABLE: Glow-wire-test [60 s]**								
Specimen				Flame					
Part	Material	Material-thickness [mm]	Colour	[°C]	Start [s]	End [s]	Height [mm]	Ignition of tissue paper	Result
L/N pin sleeving material	SABIC JAPAN L L C	--	Black	750	--	--	--	No	Pass
ISODs pin material	SABIC JAPAN L L C	--	Black	750	--	--	--	No	Pass
Enclosure	SABIC JAPAN L L C	--	Black	750	--	--	--	No	Pass
Supplementary information:									

BS 1363-1:2016+A1:2018			
Clause	Requirement – Test	Result – Remark	Verdict

Interchangeable UK plug portion for switching Plug

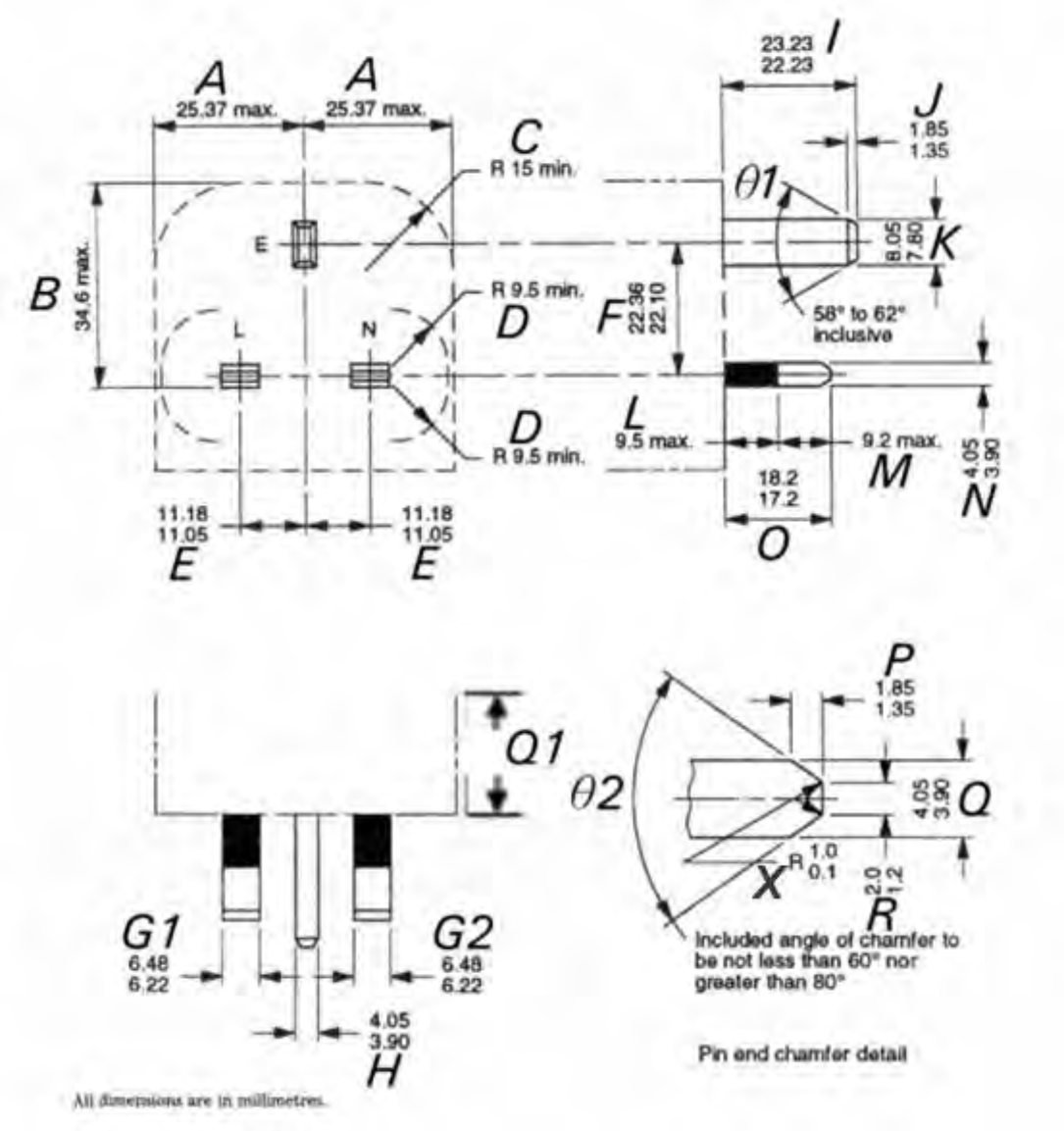

BS 1363-1:2016+A1:2018			
Clause	Requirement – Test	Result – Remark	Verdict

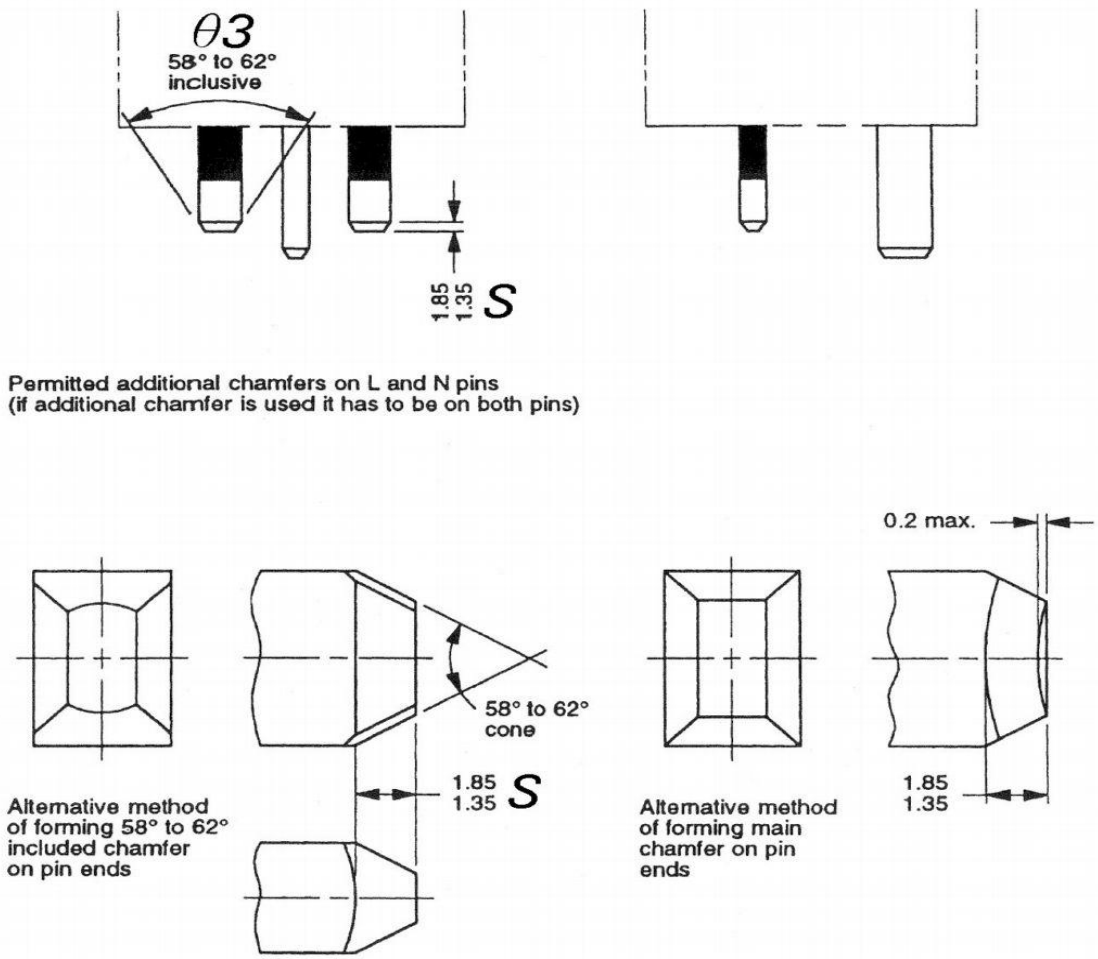

All dimensions are in millimetres.

NOTE 1. External edges of pins are to be free from burrs or sharp edges and may have a radius not exceeding 1 mm.

NOTE 2. The surfaces of pins are to be flat within the specified tolerances.

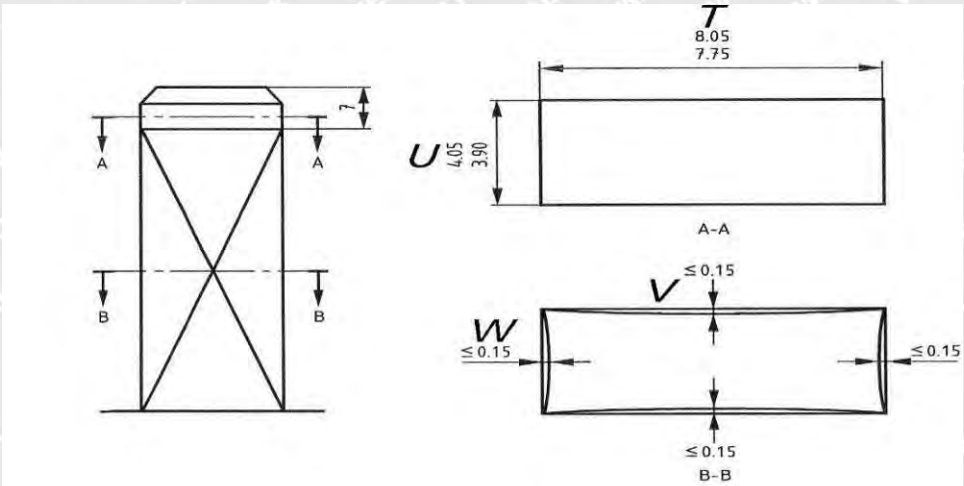

Solid insulated shutter opening device (ISOD)

NOTE Section A-A to be measured away from chamfer as shown.

BS 1363-1:2016+A1:2018			
Clause	Requirement – Test	Result – Remark	Verdict

Appendix 1 (Refer to 12.2)

13A Plug Portion Dimensions

Linear Dimensions (mm)	Measurement			Limit	Verdict
	Sample A	Sample B	Sample C		
A	23.96	23.94	23.96	25.37 max.	P
B	30.28	30.25	30.26	34.6 max.	P
C	1)	1)	1)	R15 min.	P
D	1)	1)	1)	R9.5 min.	P
E (from L to E)	11.11	11.11	11.10	11.05 - 11.18	P
(from N to E)	11.12	11.11	11.12	11.05 - 11.18	P
F	22.13	22.13	22.13	22.10 - 22.36	P
G1	6.35	6.35	6.35	6.22 – 6.48	P
G2	6.32	6.32	6.32	6.22 – 6.48	P
H	3.98	3.98	3.97	3.90 – 4.05	P
I	22.13	22.12	22.13	22.23 – 23.23	P
J	1.76	1.75	1.75	1.35 – 1.85	P
K	8.03	8.03	8.03	7.80 – 8.05	P
L (line)	9.09	9.09	9.09	9.5 max.	P
(neutral)	9.09	9.09	9.09		P
M (line)	8.86	8.88	8.87	9.2 max.	P
(neutral)	8.87	8.87	8.88		P
N (line) (sleeve)	3.97	3.97	3.96	3.90 – 4.05	P
(neutral) (sleeve)	3.96	3.97	3.97		P
O (line)	17.95	17.97	17.97	17.20 – 18.20	P
(neutral)	17.96	17.97	17.96		P
P (line)	1.61	1.60	1.61	1.35 – 1.85	P
(neutral)	1.61	1.61	1.60		**P**
(earth)	1.61	1.61	1.61		P
Q (line) (metal)	4.01	4.01	4.01	3.90 – 4.05	P
(neutral) (metal)	4.01	4.01	4.01		P
(earth) (metal)	3.99	3.99	3.99		P
Q1	--	--	--	6.35 min	P
R (line)	1.87	1.86	1.87	1.2 – 2.0	P
(neutral)	1.86	1.86	1.87		P

BS 1363-1:2016+A1:2018			
Clause	Requirement – Test	Result – Remark	Verdict

Linear Dimensions (mm)	Measurement			Limit	Verdict
	Sample A	Sample B	Sample C		
(earth)	1.87	1.87	1.87		P
S (line/ neutral)	1.61/1.61	1.61/1.61	1.61/1.61	1.35 – 1.85	P
θ1	P	P	P	58°– 62°	P
θ2 (line/ neutral)	P	P	P	60°– 80°	P
(earth)	P	P	P		P
θ3	P	P	P	58°– 62°	P
X	P	P	P	R 0.1-1.0	P

[1)] The outline of the plug is different from shown in figure, but it can insert the gauge fully with a force less than 10 N. So the dimension C is not applicable for the case.

For solid insulated shutter opening device

Linear Dimensions (mm)	Measurement			Limit	Verdict
	Sample A	Sample B	Sample C		
T	--	--	--	7.75 – 8.05	--
U	--	--	--	3.90 – 4.05	--
V (E → L)	--	--	--	0.15 max.	--
(E → N)	--	--	--	0.15 max.	--
W (E → Top)	--	--	--	0.15 max.	--
(E → L&N)	--	--	--	0.15 max.	--

Photo Documentation:
Model Q-UK

Photo 1

Photo 2

BS 1363-1:2016+A1:2018			
Clause	Requirement – Test	Result – Remark	Verdict

Photo 3

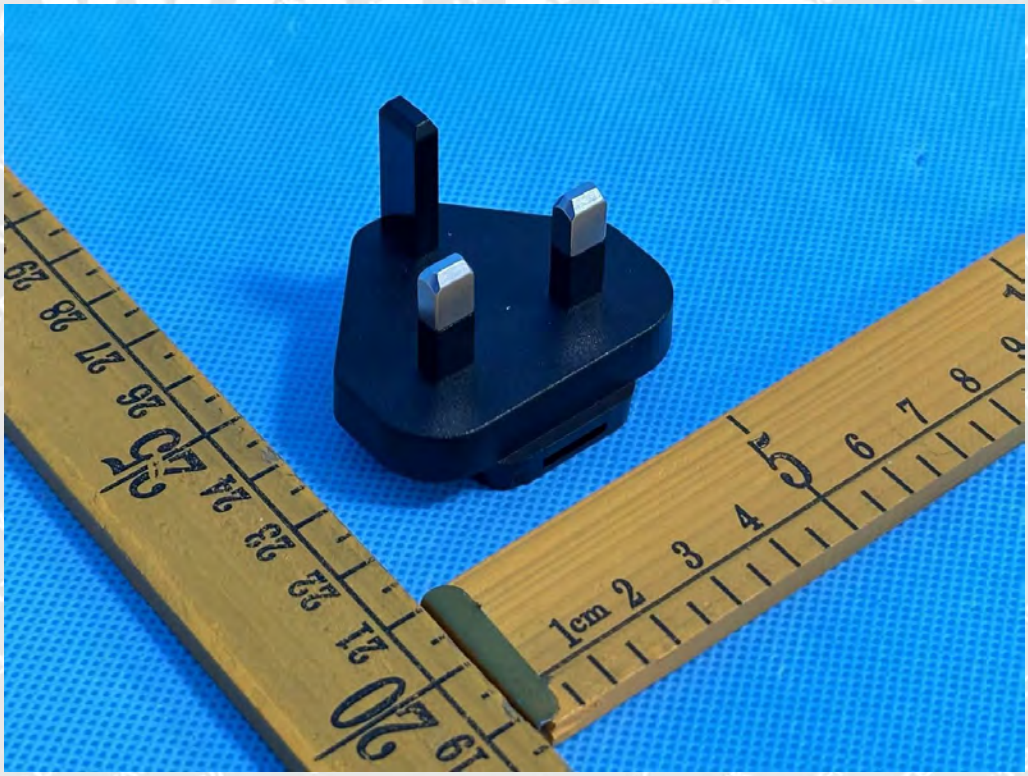

Photo 4

BS 1363-1:2016+A1:2018			
Clause	Requirement – Test	Result – Remark	Verdict

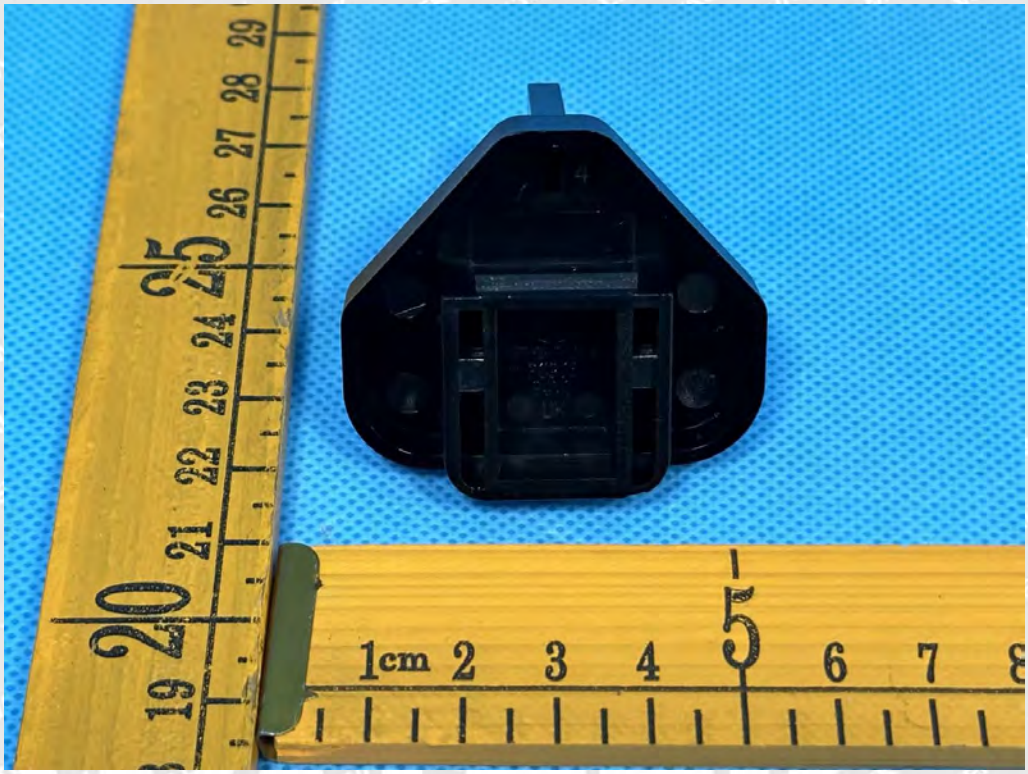

Photo 5

======End of Report======