中国认可
国际互认
检测
TESTING
CNAS L3110

TEST REPORT

Reference No.	:	WTX25D07183782Z
Applicant	:	GlobTek,Inc.
Address	:	186 Veterans Dr. Northvale, NJ 07647 USA
Manufacturer	:	GlobTek,Inc.
Address	:	186 Veterans Dr. Northvale, NJ 07647 USA
Product Name	:	Plug for power supply
Model No	:	Q-EU
Standards	:	EN 50075:1990
Test Item	:	See list of test item
Date of Receipt sample	:	2025-07-22
Date of Test	:	2025-07-22 to 2025-08-07
Date of Issue	:	2025-08-25
Test Result	:	The submitted samples comply with the above standards

Remarks:
The results shown in this test report refer only to the sample(s) tested, this test report cannot be reproduced, except in full, without prior written permission of the company. The report would be invalid without specific stamp of test institute and the signatures of compiler and approver.

Prepared By:
Waltek Testing Group Co., Ltd.
Address: No.77,Houjie Section, Guantai Road., Houjie Town, Dongguan City, Guangdong, China
Tel: +86-769-2267 6998
Fax: +86-769-2267 6828

Compiled by:

Dave Feng

Dave Feng / Project Engineer

Approved by:

Sam Qi

Sam Qi / Designated Reviewer

WALTEK TESTING GROUP CO.,LTD. WALTEK TEST REPORT

List of test items:

No.	Test Items	Requirement + Test	Result
1	Dimensions	EN 50075 Clause 7	N/A
2	Protection against electric shock	EN 50075 Clause 8	N/A
3	Resistance to humidity	EN 50075 Clause 10	P
4	Insulation resistance and electric strength	EN 50075 Clause 11	P
5	Mechanical strength	EN 50075 Clause 13	P
6	Resistance to heat and to ageing	EN 50075 Clause 14	P
7	Resistance of insulation material to abnormal heat and to fire	EN 50075 Clause 17	P

Subcontract
Whether parts of tests for the product have been subcontracted to other labs:
Yes No
If Yes, list the related test items and lab information:
Test items: ---
Lab information: --

Name and address of factory (ies):
1. GlobTek,Inc.
186 Veterans Dr. Northvale, NJ 07647 USA
2. GlobTek (Suzhou) Co., Ltd
Building 4, No. 76, Jin Ling East Rd., Suzhou Industrial Park, Suzhou, JiangSu 215021, China

Remarks:
The product is Plug for power supply.
This report only evaluates the plug part, which is detailed in the Final Product Report

EN 50075: 1990			
Clause	Requirement – Test	Result – Remark	Verdict
5	**Rating**		N/A
	Plugs according to this standard shall be rated 2.5A 250Va.c.		N/A
6	**Marking**		N/A
6.1, 6.2	Plugs shall be marked with:		N/A
	-the rated current in amperes		N/A
	-the rated voltage in volts		N/A
	-the symbol for nature of supply: ~		N/A
	-either the name, trade mark or identification mark of the manufacturer or of the responsible vendor		N/A
	-the type reference, which may be a catalogue number		N/A
6.3	Symbol for Class II construction not allowed		N/A
6.4	Marking durable	On adapter	N/A
	Easily legible		N/A
	15 s water and 15 s petroleum spirit		N/A
7	**Dimensions**		**P**
	Plugs shall comply with Standard Sheet 1.	See table (dimensions of plug)	P
	compliance is checked by measurement and by means of the gauges shown in figures 1 and 2.		P
	The use of the gauges shown in figure 1 for checking the diameter of the pins, is optional.		P
8	**Protection against electric shock**		**P**
8.1	Test finger of fig. 3		P
	Ambient temperature: 35 ± 2 °C		P
	Force: 75 N (60s)		P
8.2	Gauge of fig. 4		P
	Ambient temperature: 35 ± 2 °C		P
8.3	External parts of insulating material		P
9	**Construction**		**P**
9.1	Non-rewirable plug		P
9.2	Switches, fuses and lampholders not incorporated		P
9.3	Pins of plug solid	Complied. according to clause 13.	P

EN 50075:1990			
Clause	Requirement – Test	Result – Remark	Verdict
9.4	Pins of plug locked against rotation	Complied. according to clause 13.1 and 13.4.	P
9.5	Effective permanent connections:		P
	- soldered, welded, crimped		P
	- screwed and snap-on connections not used		P
	- presoldered flexible conductor for crimping not permitted		P
9.6	Gripping operation:		N/A
	- length ⩾55 mm		N/A
	- ball test		N/A
10	**RESISTANCE TO HUMIDITY**		**P**
	Humidity between 91 % ~ 95 % and temperature between 20 ºC ~ 30 ºC for 48 h.	93% R.H., 25°C, 48 h	P
11	**INSULATION RESISTANCE AND ELECTRIC STRENGTH**		**P**
11.1	Resistance ⩾5 MΩ (500 V, 1 min)		P
11.2	Electric strength test (2000 V, 1 min): no flashover or breakdown	Not breakdown.	P
12	**FLEXIBLE CORDS AND THEIR CONNECTION**		**N/A**
12.1	Cords in compliance with HD 21.5 or HD 22.4		N/A
13	**MECHANICAL STRENGTH**		**P**
13.1	Compression test (150 N, 5 min)		P
13.2	Tumbling barrel test: number of falls..... :	80g of mass for whole product. 1000 falls was conducted.	P
	Torque test on pins (0.4 Nm, 1 min)		P
13.3	Abrasion test (20 000 movements)		P
13.4	Pin shall not have displaced in body of the plug more than 1mm	Displacement: 0.5 mm	P
14	**RESISTANCE TO HEAT AND TO AGEING**		**P**
14.1	Sufficient resistant to heat		P
14.1.1	Heating test (100 °C, 1 h)	Tested with adapter	P

EN 50075:1990			
Clause	Requirement – Test	Result – Remark	Verdict
14.1.2	Pressure test (80°C, 20 N, 1 h). For this case, ball pressures test considered severer than this clause, so the enclosure was subjected to ball pressure test (80°C, 1 h). As considered for ensure the safety aspect, the insulation material retaining the current-carrying parts was subjected to the ball pressure test (125°C, 1 h).	No damaged	P
14.2	Aging test		P
	-at 70°C for 168h	No damaged	P
	-at room temperature for 96h		P
	No traces of cloth at a force of 5N	No damaged	P
	No damage leads to non-compliance		P
15	**CURRENT-CARRYING PARTS AND CONNECTIONS**		**P**
15.1	Connections withstand the mechanical stresses occurring in normal use		P
15.2	Current-carrying parts		P
15.3	Contact pressure		P
	Material of current-carrying		P
	Alloy containing at least 58% of copper		P
16	**CREEPAGE DISTANCES, CLEARANCES AND DISTANCES THROUGH INSULATION**		**P**
16.1	Creepage distances and clearances between live parts ⩾3 mm		P
	Creepage distances and clearances between live parts and accessible external surfaces ⩾3 mm		P
	Distance through insulation ⩾1.5 mm		P
17	**RESISTANCE OF INSULATING MATERIAL TO ABNORMAL HEAT AND TO FIRE**		**P**
	Glow-wire test (750 °C for parts necessary to retain current-carrying parts in position): no visible flame, no sustained glowing or flames and glowing extinguish within 30 s after removal of glow-wire	Glow wire test performed on plug pin holder with 750°C.	P
	Glow-wire test (650 °C for other parts): no visible flame, no sustained glowing or flames and glowing extinguish within 30 s after removal of glow-wire	Glow wire test performed on Plastic enclosure portion with: 650°C.	P

Data sheet: Two-pole plug 2.5 A 250 V for Class II appliances (Clause: 7)
According to EN50075 – Standard Sheet and IEC60083 – Standard C5

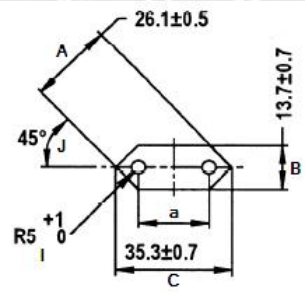

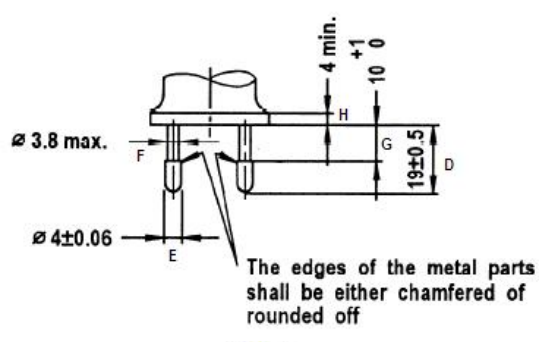

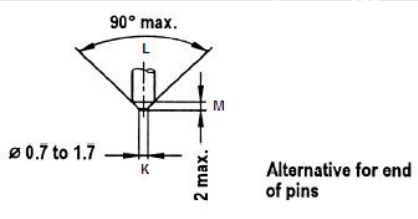

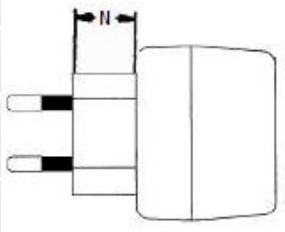

Sub-clause 7 Dimension of plug shall comply with standard sheet1. Unit (mm)

Location	Sample No. 1	Sample No. 2	Sample No. 3	Limit
A	26.5	26.4	26.5	26.1±0.5
B	14.33	14.3	14.33	13.7±0.7
C	35.4	35.4	35.4	35.3±0.7
D	18.62	18.6	18.62	19.0±0.5
E	3.97	3.98	3.97	φ4±0.06
F	3.53	3.53	3.53	φ3.8 max.
G	10.1	10.1	10.1	10-11
a1 (Engagement)	18.41	18.41	18.41	18-19.2
a2 (End)	17.72	17.72	17.72	17-18
H	--	--	--	4 min.
I	5.1	5.1	5.1	R5-6
J	45	45	45	45º
N	19.1	19.11	19.1	18 min.
O	3.96	3.96	3.96	φ4.0 max.
Alternative for end of pin				
K	--	--	--	φ0.7-1.7
L	--	--	--	90º max.
M	--	--	--	2.0 max.
Remark: 1.Dimension “O” can be same with dimension “F”. 2.Dimension “O” can be 4 mm within a distance of 4 mm from the engagement face of the plug.				

Photo Documentation:

Photo 1

Photo 2

Photo 3

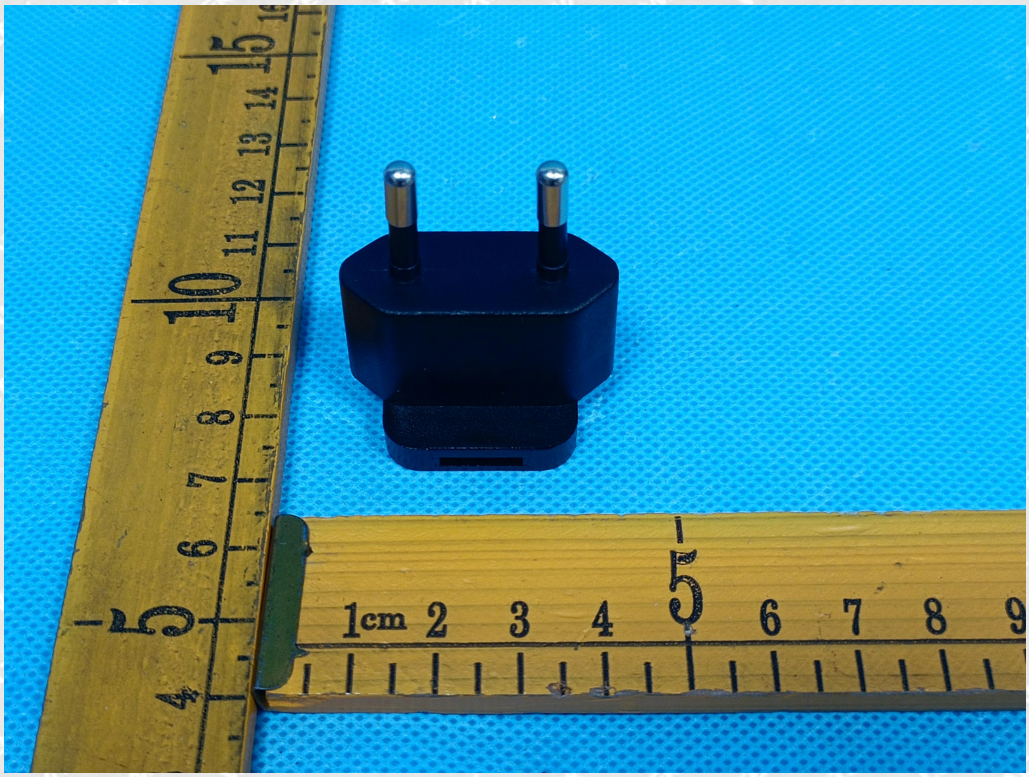

Photo 4

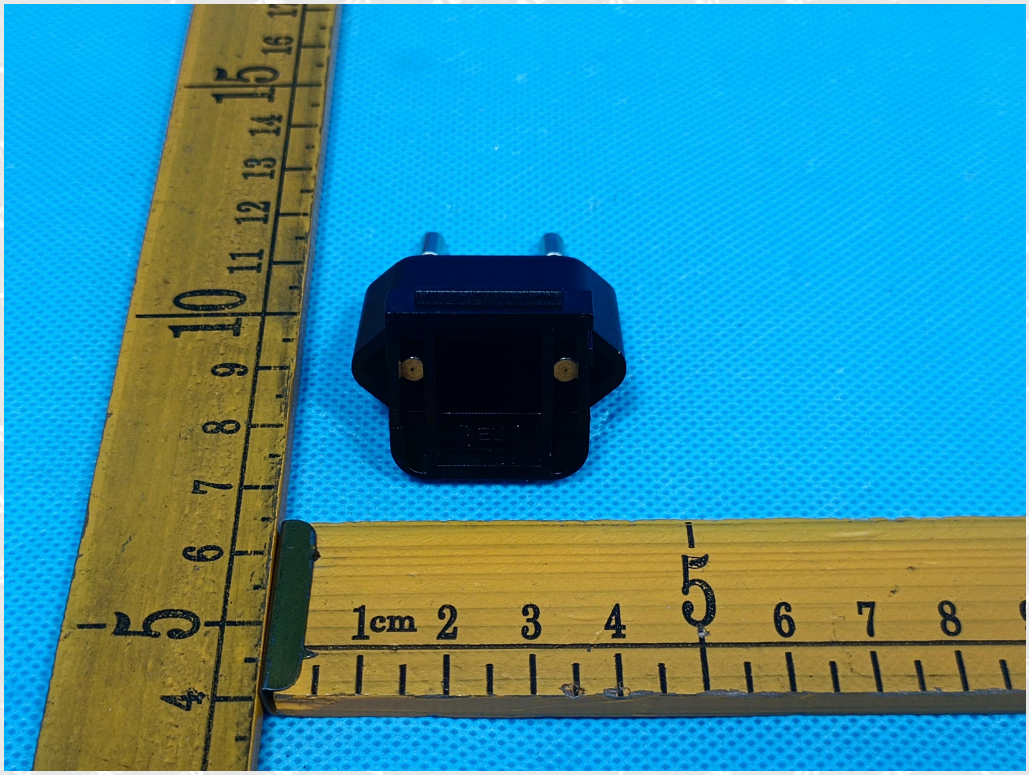

Photo 5

======End of Report======