Listing Constructional Data Report (CDR)

1.0 Reference and Address					
Report Number	151100937SHA-001	Original Issued:	7-Nov-2016	Revised:	None
Standard(s)	Information Technology Equipment Safety Part 1: General Requirements (UL 60950-1 Issued: 2007/03/27 Ed: 2 Rev: 2014/10/14) Information Technology Equipment Safety Part 1: General Requirements (CSA C22.2 No. 60950-1 Issued: 2007/03/27 Ed: 2 (R2012) Amd. 1: 2011, Amd. 2: 2014)				

Applicant	GlobTek, Inc.	Manufacturer	**GlobTek (Suzhou) Co., Ltd.**
Address	186 Veterans Dr. Northvale, NJ 07647 USA	Address	Building 4. No 76 JinLing East Road, Suzhou Industrial Park, Suzhou, JiangSu, 215021
Country	USA	Country	China
Contact	Hans Moritz	Contact	Demon Zhou
Phone	(201)784-1000 Ext.253	Phone	86 512 6279 0301 Ext.189
FAX	(201)784-0111	FAX	86 512 6279 0355
Email	Moritzh@globtek.com	Email	demon.zhou@globtek.cn

This report is for the exclusive use of Intertek's Client and is provided pursuant to the agreement between Intertek and its Client. Intertek's responsibility and liability are limited to the terms and conditions of the agreement. Intertek assumes no liability to any party, other than to the Client in accordance with the agreement, for any loss, expense or damage occasioned by the use of this report. Only the Client is authorized to permit copying or distribution of this report and then only in its entirety. Any use of the Intertek name or one of its marks for the sale or advertisement of the tested material, product or service must first be approved in writing by Intertek. The observations and test results in this report are relevant only to the sample tested. This report by itself does not imply that the material, product, or service is or has ever been under an Intertek certification program.

2.0 Product Description	
Product	ITE Power Supply
Brand name	GlobTek, Inc.
Description	Product covered by this report is power supply module. Direct plug-in power adapter with interchangeable plug portion, which is Class II apparatus. It can be used with different plug types. The evaluation reports of the different plug types are also attached with this report. Desktop power supply is provided with suitable external enclosure, which is Class I or Class II apparatus. Two pieces of outer enclosure are enclosed with ultrasonic welding without screw. The product is not intended to use in the environment which altitude exceed 5000m.
Models	GT*96180-****** (where * in the model name are letters or numbers or blank)
Model Similarity	The 1st "*" part can be 'M' or '-' or 'H' for market identification and not related to safety. The 2nd "*" denotes the rated output wattage designation, which can be "01" to "18", with interval of 1. The 3rd "*" denotes the standard rated output voltage designation, it can be "07","11", "17.9","30", "38", "48", "54" or "56"; The 4th "*"is optional deviation, subtracted from standard output voltage, which can be "-0.01" to "-12.0" with interval of 0.01, or blank to indicate no voltage different. The 3rd "*" and 4th "*" together denote the output voltage, with a range of 5 - 56 volts. The 5th"*"= blank, it means wall plug in with interchangeable blade =-T2 means desktop class II with C8 AC inlet =-T2A means desktop class II with C18 AC inlet =-T3 means desktop class I with C14 AC inlet =-T3A means desktop class I with C6 AC inlet =-R2 means hybrid desktop housing class II with C8 AC inlet =-R3A means hybrid desktop housing class I with C6 AC inlet The 6th"*" = Blank or -AP or -PP or -SP -AP (with baby board) stands for Active POE (full IEEE compliant) -PP (no baby board) stands for Passive POE -SP (no baby board) stands for Simple POE The last * denote any six character = 0-9 or A-Z or ()[] or – or blank for marketing purposes. Transformers used in models of GT*96180-****** are with similar construction. In the same model series, the turns of secondary winding may be added or reduced according different output voltage. In the same model series, some non-critical components may be adjusted according different output voltage. The parameters of these components depend on output voltage.
Ratings	Input: 100-240V～, 50-60Hz, 0.6A Output: 5-56VDC, Max. 18W See section 7.0, Illustration 1 for details
Other Ratings	N/A

3.0 Product Photographs

Photo 1 - External view for GT*96180 series (Interchangeable plug)

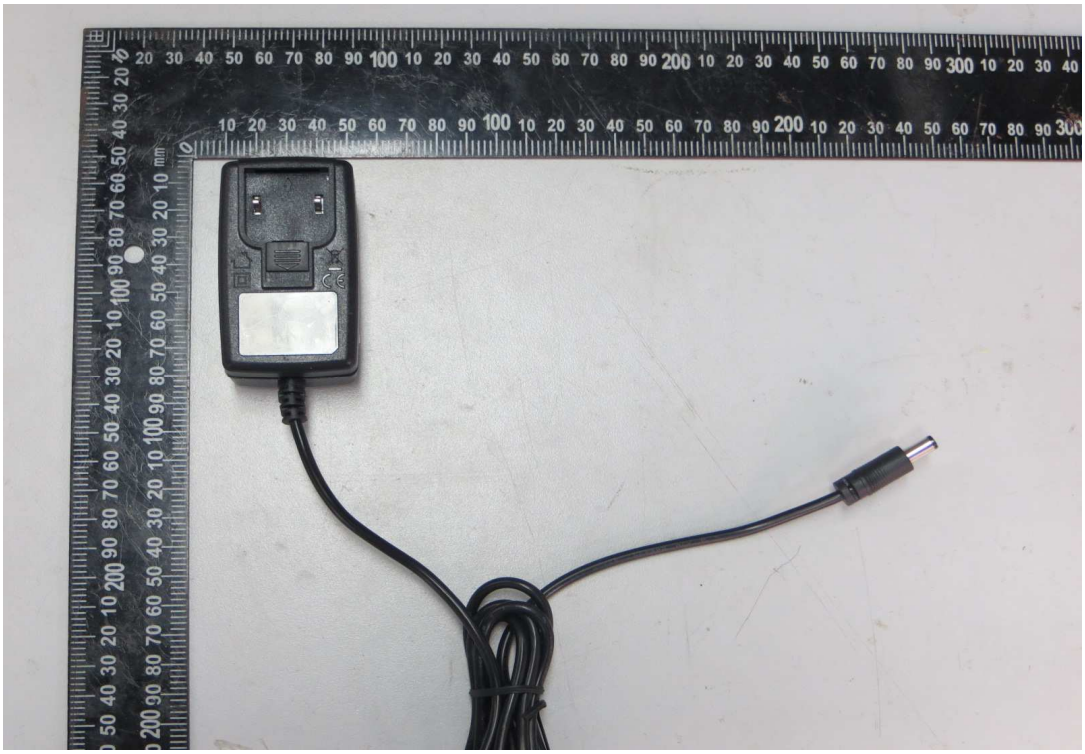

Photo 2 - External view for GT*96180 series (desktop)

3.0 Product Photographs

Photo 3 - Internal view for GT*96180 series (Interchangeable plug)

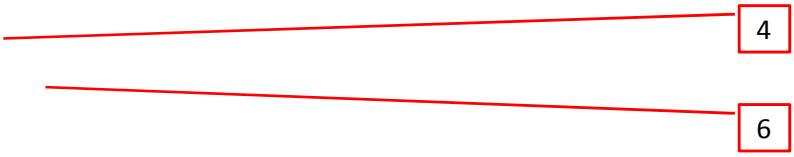

Photo 4 - Internal view for GT*96180 series (Interchangeable plug)

3.0 Product Photographs

Photo 5 - Internal view for GT*96180 series (Desktop, Class I)

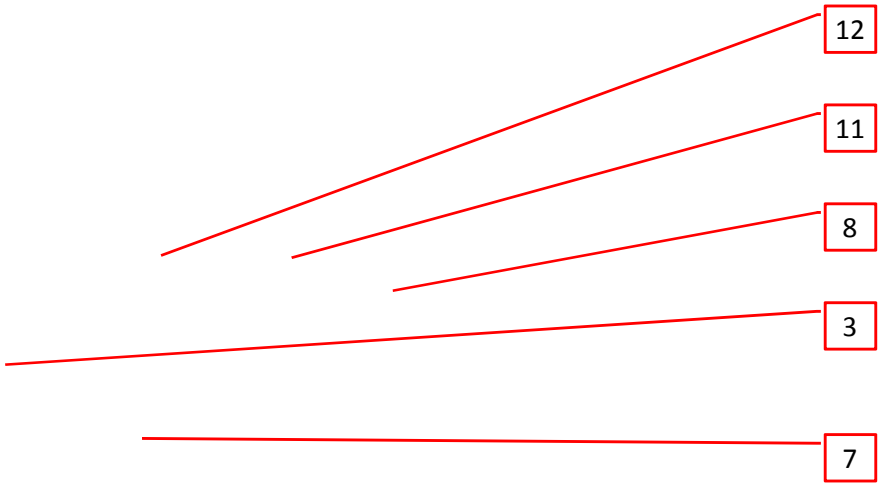

Photo 6 - Internal view for GT*96180 series (Desktop, Class I)

3.0 Product Photographs

Photo 7 - Internal view for GT*96180 series (Desktop, Class II)

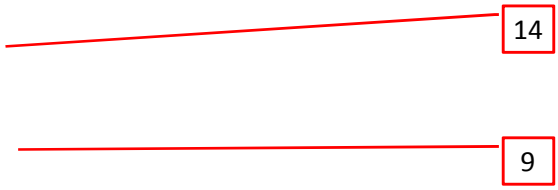

Photo 8 - Internal view for GT*96180 series (Desktop, Class II)

3.0 Product Photographs

Photo 9 - External view for GT*96180 POE series

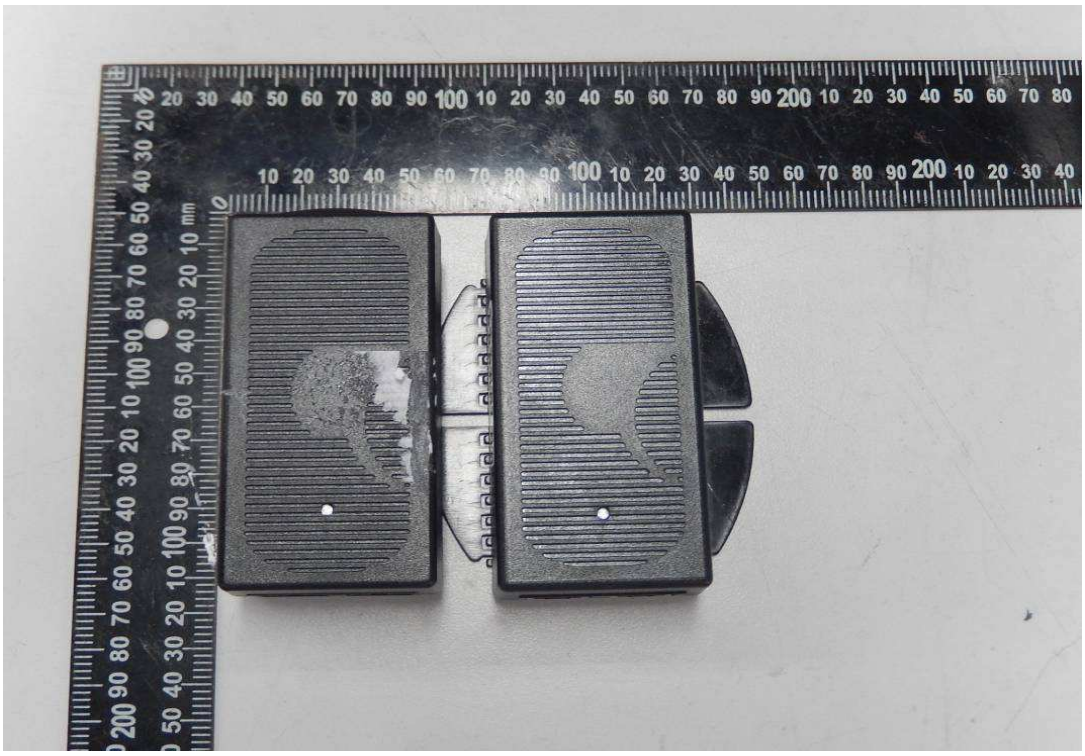

Photo 10 - Internal view for GT*96180 POE series

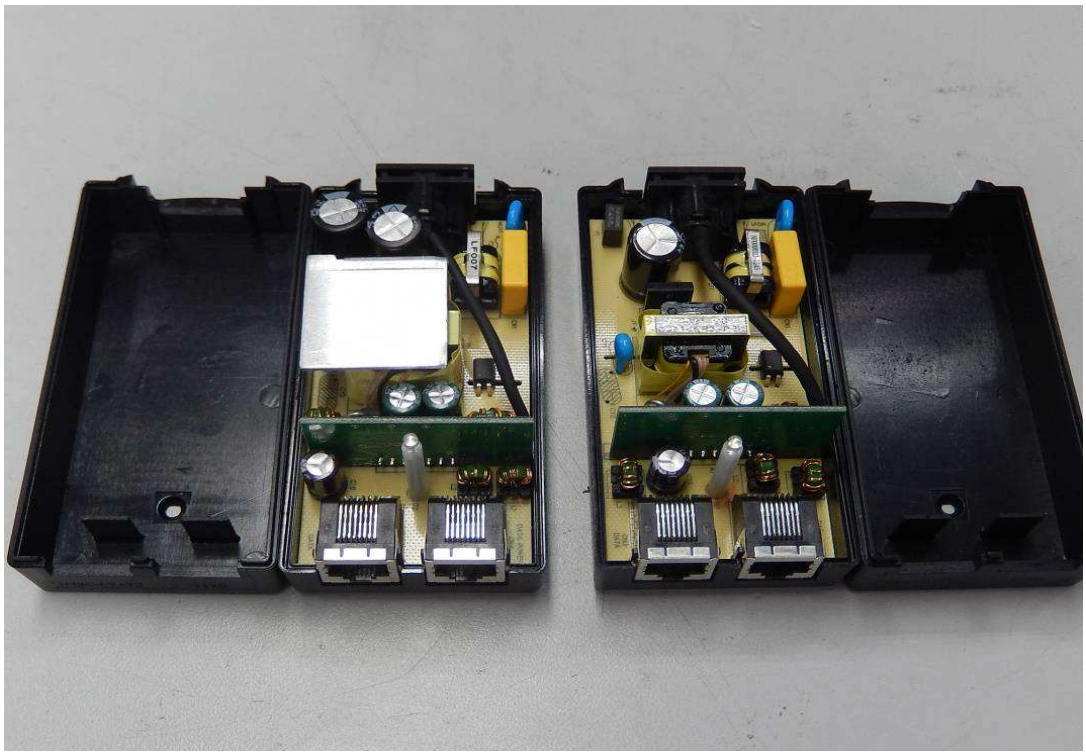

3.0 Product Photographs

Photo 11 - Internal view for GT*96180 POE series

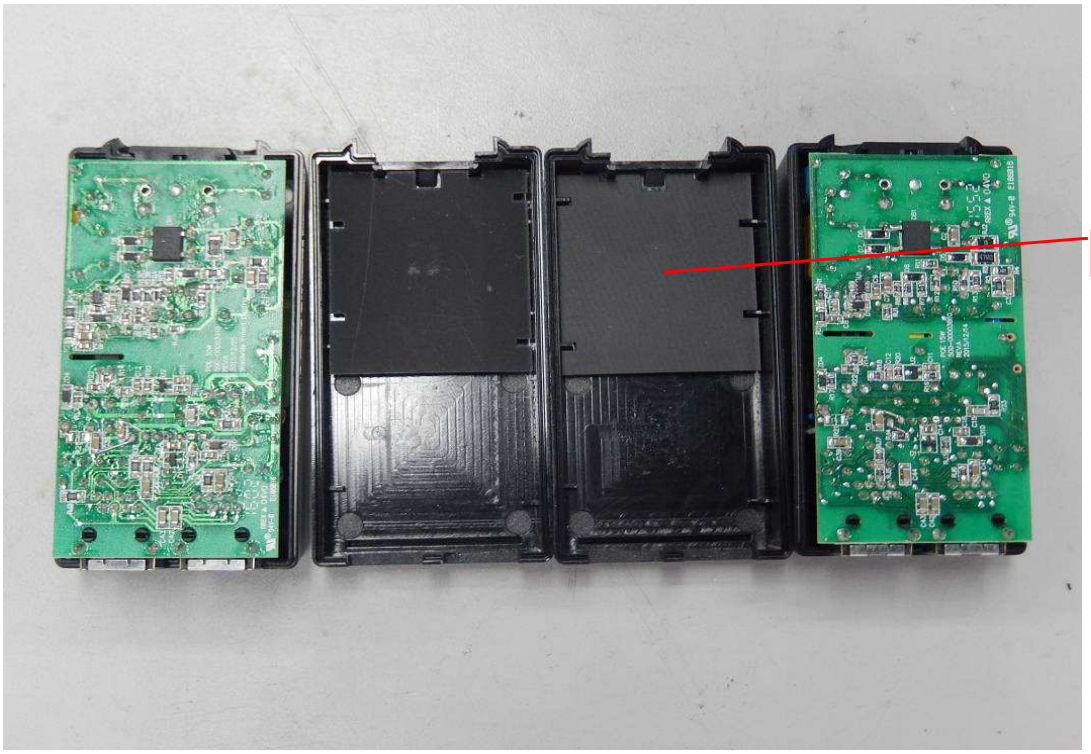

Photo 12 - PCB for GT*96180 POE series

3.0 Product Photographs

Photo 13 - Plug pin side view of NEMA 1-15P plug portion

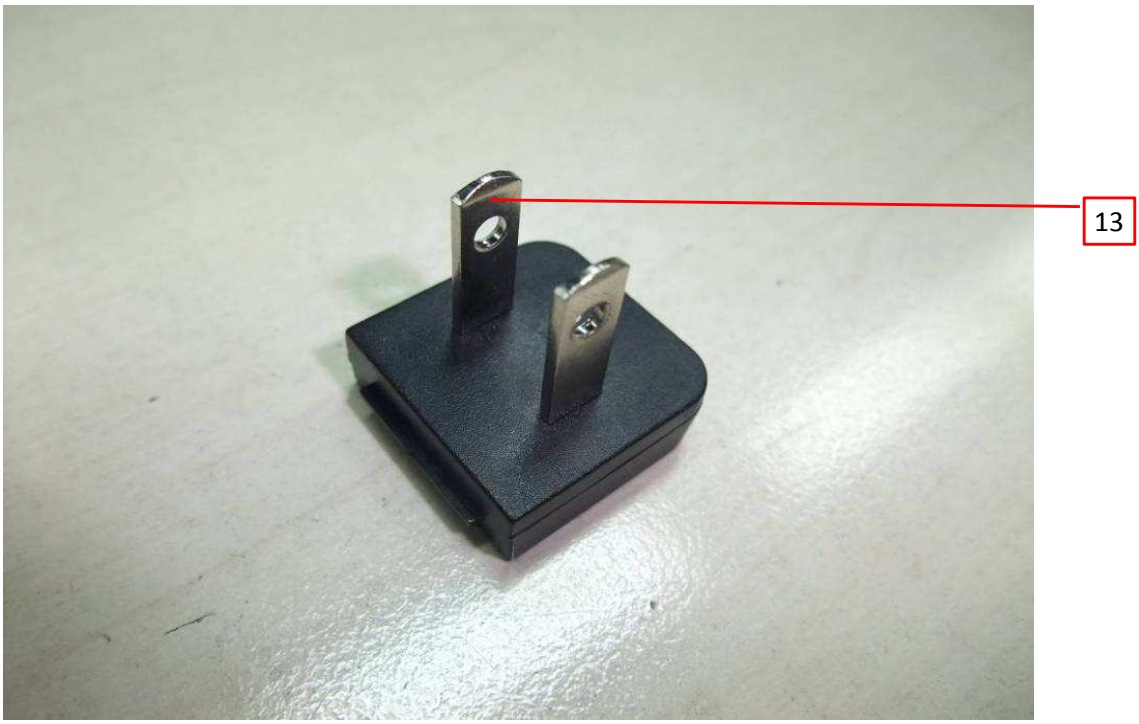

Photo 14 - Connector side view of NEMA 1-15P plug portion

4.0 Critical Components						
Photo #	Item no.[1]	Name	Manufacturer/ trademark[2]	Type / model[2]	Technical data and securement means	Mark(s) of conformity [3]
2	1	Enclosure (All models)	SABIC INNOVATIVE PLASTICS B V	SE1	PPE+PS, V-1, HWI 1, HAI 2, 105°C , min thickness: 2.0mm; Fixed by ultrasonic welding and without opening;	cURus
			SABIC INNOVATIVE PLASTICS B V	SE1X	PPE+PS, V-1, HWI 0, HAI 0, 105°C , min thickness: 2.0mm; Fixed by ultrasonic welding and without opening;	cURus
			SABIC INNOVATIVE PLASTICS B V	SE100	PPE+PS, V-1, HWI 2, HAI 0, 95°C , min thickness: 2.0mm; Fixed by ultrasonic welding and without opening;	cURus
			SABIC INNOVATIVE PLASTICS B V	C2950	PC/ABS, V-0, HWI 3, HAI 0, 85°C , min thickness: 2.0mm; Fixed by ultrasonic welding and without opening;	cURus
			SABIC INNOVATIVE PLASTICS B V	CX721	PC/ABS, V-0, 5VB, HWI 2, HAI 0, 90°C , min thickness: 2.0mm; Fixed by ultrasonic welding and without opening;	cURus
			SABIC INNOVATIVE PLASTICS B V	EXCY0098	PC/ABS, V-0, 5VB, HWI 2, HAI 0, 90°C , min thickness: 2.0mm; Fixed by ultrasonic welding and without opening;	cURus
			SABIC INNOVATIVE PLASTICS B V	945	PC, V-0, HWI 3, HAI 3, 120°C, min thickness: 2.0mm; Fixed by ultrasonic welding and without opening;	cURus
			SABIC INNOVATIVE PLASTICS B V	940	PC, V-0, HWI 3, HAI 3, 120°C, min thickness: 2.0mm; Fixed by ultrasonic welding and without opening;	cURus
			TEIJIN CHEMICALS LTD	LN-1250P	PC, V-0, HWI 3, HAI 0, 115°C , min thickness: 2.0mm; Fixed by ultrasonic welding and without opening;	cURus
			TEIJIN CHEMICALS LTD	LN-1250G	PC, V-0, HWI 3, HAI 0, 115°C , min thickness: 2.0mm; Fixed by ultrasonic welding and without opening;	cURus
			SABIC INNOVATIVE PLASTICS B V	HF500R	PC, V-0, HWI 1, HAI 3, 115°C , min thickness: 2.0mm; Fixed by ultrasonic welding and without opening;	cURus
			CHI MEI CORPORATION	PA-765A	ABS, V-0, 5VB, HWI 3, HAI 0, 80°C , min thickness: 2.0mm; Fixed by ultrasonic welding and without opening;	cURus
			CHI MEI CORPORATION	PC-540	PC/ABS, V-0, HWI 3, HAI 3, 70°C , min thickness: 2.0mm; Fixed by ultrasonic welding and without opening;	cURus
			Various	1185	Min. 24AWG, min. 300Vac, min. 80°C	cURus
			Various	2464	Min. 24AWG, min. 300Vac, min. 80°C	cURus

4.0 Critical Components						
Photo #	Item no.[1]	Name	Manufacturer/ trademark[2]	Type / model[2]	Technical data and securement means	Mark(s) of conformity [3]
2	2	Output cord	Various	2468	Min. 24AWG, min. 300Vac, min. 80°C	cURus
			Various	Various	Min. 24AWG, min. 300Vac, min. 80°C, performance parameter shall be equal to 1185, 2464 or 2468.	cURus
5	3	Appliance inlet	ZHEJIANG LECI ELECTRONICS CO LTD	DB-6	250VAC, 2.5A, standard sheet C6 type	cURus
			RICH BAY CO LTD	R-30790	250VAC, 2.5A, standard sheet C6 type	cURus
			SUN FAIR ELECTRIC WIRE & CABLE (HK) CO LTD	S-02	250VAC, 2.5A, standard sheet C6 type	cURus
			TECX-UNIONS TECHNOLOGY CORP	TU-333	250VAC, 2.5A, standard sheet C6 type	cURus
			RONG FENG INDUSTRIAL CO LTD	RF-190	250VAC, 2.5A, standard sheet C6 type	cURus
			INALWAYS CORP	0724	250VAC, 2.5A, standard sheet C6 type	cURus
			ZHE JIANG BEI ER JIA ELECTRONIC CO LTD	ST-A04-002	250VAC, 2.5A, standard sheet C6 type	cURus
			SHENZHEN DELIKANG ELECTRONICS TECHNOLOGY CO LTD	CDJ-2	250VAC, 2.5A, standard sheet C6 type	cURus
			ZHEJIANG LECI ELECTRONICS CO LTD	DB-14	250VAC, 10A, standard sheet C14 type	cURus
			RICH BAY CO LTD	R-301SN	250VAC, 10A, standard sheet C14 type	cURus
			SUN FAIR ELECTRIC WIRE & CABLE (HK) CO LTD	S-03	250VAC, 10A, standard sheet C14 type	cURus
			TECX-UNIONS TECHNOLOGY CORP	TU-301-S	250VAC, 10A, standard sheet C14 type	cURus
			TECX-UNIONS TECHNOLOGY CORP	TU-301-SP	250VAC, 10A, standard sheet C14 type	cURus
			RONG FENG INDUSTRIAL CO LTD	SS-120	250VAC, 10A, standard sheet C14 type	cURus
			INALWAYS CORP	0711	250VAC, 10A, standard sheet C14 type	cURus
			ZHE JIANG BEI ER JIA ELECTRONIC CO LTD	ST-A01-003J	250VAC, 10A, standard sheet C14 type	cURus

4.0 Critical Components						
Photo #	Item no.[1]	Name	Manufacturer/ trademark[2]	Type / model[2]	Technical data and securement means	Mark(s) of conformity [3]
			ZHEJIANG LECI ELECTRONICS CO LTD	DB-8	250VAC, 2.5A, standard sheet C8 type	cURus
			RICH BAY CO LTD	R-201SN90	250VAC, 2.5A, standard sheet C8 type	cURus
			SUN FAIR ELECTRIC WIRE & CABLE (HK) CO LTD	S-01	250VAC, 2.5A, standard sheet C8 type	cURus
			TECX-UNIONS TECHNOLOGY CORP	SO-222	250VAC, 2.5A, standard sheet C8 type	cURus
			RONG FENG INDUSTRIAL CO LTD	RF-180	250VAC, 2.5A, standard sheet C8 type	cURus
			INALWAYS CORP	0721	250VAC, 2.5A, standard sheet C8 type	cURus
			ZHE JIANG BEI ER JIA ELECTRONIC CO LTD	ST-A03-005	250VAC, 2.5A, standard sheet C8 type	cURus
			SHENZHEN DELIKANG ELECTRONICS TECHNOLOGY CO LTD	CDJ-8	250VAC, 2.5A, standard sheet C8 type	cURus
3	4	Fuse (F1, F2) (F2 is optional)	CONQUER ELECTRONICS CO LTD	MST series	T1.6A, 250V	cURus
			EVER ISLAND ELECTRIC CO LTD & WALTER ELECTRIC	2010	T1.6A, 250V	cURus
			EVER ISLAND ELECTRIC CO LTD & WALTER ELECTRIC	ICP	T1.6A, 250V	cURus
			BEL FUSE INC	RST series	T1.6A, 250V	cURus
			COOPER BUSSMANN LLC	SS-5	T1.6A, 250V	cURus
			SHENZHEN LANSON ELECTRONICS CO LTD	SMT	T1.6A, 250V	cURus
			DAS & SONS INTERNATIONAL LTD	385T series	T1.6A, 250V	cURus
			DONGGUAN BETTER ELECTRONICS TECHNOLOGY CO LTD	932	T1.6A, 250V	cURus
			HOLLYLAND CO LTD	5ET	T1.6A, 250V	cURus
			SUNNY EAST ENTERPRISE CO LTD	CFD series	T1.6A, 250V	cURus

4.0 Critical Components						
Photo #	Item no.[1]	Name	Manufacturer/ trademark[2]	Type / model[2]	Technical data and securement means	Mark(s) of conformity [3]
			CONQUER ELECTRONICS CO LTD	MET series	T1.6A, 250V	cURus
			ZHONG SHAN LANBAO ELECTRICAL APPLIANCES CO LTD	RTI-10 series	T1.6A, 250V	cURus
12	5	Bridging resistor (Not shown) (Optional)	TY-OHM (SUZHOU) ELECTRONIC WORKS CO LTD	RT	10MΩ, 1W	cURus
			YAGEO COMPONENTS (SUZHOU) CO LTD	HHV	10MΩ, 1W	cURus
3	6	X capacitor (CX1) (Optional)	CHENG TUNG INDUSTRIAL CO LTD	CTX	Min. 300VAC, Max. 0.47µF, -40~+110°C, X1 or X2	cURus
			TENTA ELECTRIC INDUSTRIAL CO LTD	MEX	Min. 250VAC, Max. 0.47µF, -40~+100°C, X1 or X2	cURus
			JOEY ELECTRONICS (DONG GUAN) CO LTD	MPX	Min. 300VAC, Max. 0.47µF, -40~+110°C, X1 or X2	cURus
			ULTRA TECH XIPHI ENTERPRISE CO LTD	HQX	Min. 250VAC, Max. 0.47µF, -40~+110°C, X2	cURus
			YUON YU ELECTRONICS CO LTD	MPX Series	Min. 250VAC, Max. 0.47µF, -40~+100°C, X2	cURus
			SINHUA ELECTRONICS (HUZHOU) CO LTD	MPX	Min. 250VAC, Max. 0.47µF, -40~+110°C, X1 or X2	cURus
			JIANGSU XINGHUA HUAYU ELECTRONICS CO LTD	MPX	Min. 250VAC, Max. 0.47µF, -40~+100°C, X2	cURus
			DAIN ELECTRONICS CO LTD	MPX	Min. 250VAC, Max. 0.47µF, -40~+110°C, X1 or X2	cURus
			DAIN ELECTRONICS CO LTD	MEX	Min. 250VAC, Max. 0.47µF, -40~+110°C, X1 or X2	cURus
			DAIN ELECTRONICS CO LTD	NPX	Min. 250VAC, Max. 0.47µF, -40~+110°C, X1 or X2	cURus
			SHENZHEN JINGHAO CAPACITOR CO LTD	CBB62B	Min. 250VAC, Max. 0.47µF, -40~+110°C, X2	cURus

4.0 Critical Components						
Photo #	Item no.[1]	Name	Manufacturer/ trademark[2]	Type / model[2]	Technical data and securement means	Mark(s) of conformity [3]
5	7	Varistor MOV1 (Optional)	THINKING ELECTRONIC INDUSTRIAL CO LTD	TVR10471K	Max. Continuous voltage: min 300Vac(rms), 85°C	cURus
			THINKING ELECTRONIC INDUSTRIAL CO LTD	TVR14471K	Max. Continuous voltage: min 300Vac(rms), 85°C	cURus
			CENTRA SCIENCE CORP	CNR-10D471K	Max. Continuous voltage: min 300Vac(rms), 105°C	cURus
			CENTRA SCIENCE CORP	CNR-14D471K	Max. Continuous voltage: min 300Vac(rms), 105°C	cURus
			SUCCESS ELECTRONICS CO LTD	SVR10D471K	Max. Continuous voltage: min 300Vac(rms), 105°C	cURus
			SUCCESS ELECTRONICS CO LTD	SVR14D471K	Max. Continuous voltage: min 300Vac(rms), 105°C	cURus
			WALSIN TECHNOLOGY CORP	VZ14D471K	Max. Continuous voltage: min 300Vac(rms), 85°C	cURus
			LIEN SHUN ELECTRONICS CO LTD	14D471K	Max. Continuous voltage: min 300Vac(rms), 105°C	cURus
			CERAMATE TECHNICAL CO LTD	10D471K	Max. Continuous voltage: min 300Vac(rms), 105°C	cURus
			CERAMATE TECHNICAL CO LTD	14D471K	Max. Continuous voltage: min 300Vac(rms), 105°C	cURus
			BRIGHTKING (SHENZHEN) CO LTD	14D471K	Max. Continuous voltage: min 300Vac(rms), 105°C	cURus
			BRIGHTKING (SHENZHEN) CO LTD	10D471K	Max. Continuous voltage: min 300Vac(rms), 105°C	cURus
			JOYIN CO LTD	10N471K	Max. Continuous voltage: min 300Vac(rms), 85°C	cURus
			JOYIN CO LTD	14N471K	Max. Continuous voltage: min 300Vac(rms), 85°C	cURus
5	8	Y capacitor (CY1, CY2) (Optional)	TDK CORPORATION	CD	Y1, AC250V, max 2200pF, -25~+85°C	cURus
			SUCCESS ELECTRONICS CO LTD	SE	Y1, AC250V, max 2200pF, -40~+125°C	cURus
			SUCCESS ELECTRONICS CO LTD	SB	Y1, AC250V, max 2200pF, -40~+125°C	cURus
			MURATA MFG CO LTD	KX	Y1, AC250V, max 2200pF, -40~+125°C	cURus
			WALSIN TECHNOLOGY CORP	AH series	Y1, AC250V, max 2200pF, -40~+125°C	cURus
			JYA-NAY CO LTD	JN	Y1, AC250V, max 2200pF, -25~+125°C	cURus

4.0 Critical Components						
Photo #	Item no.[1]	Name	Manufacturer/ trademark[2]	Type / model[2]	Technical data and securement means	Mark(s) of conformity [3]
			HAOHUA ELECTRONIC CO	CT7	Y1, AC250V, max 2200pF, -30~+125°C	cURus
			JERRO ELECTRONICS CORP	JX	Y1, AC250V, max 2200pF, -40~+125°C	cURus
			JYH CHUNG ELECTRONICS CO LTD	JD	Y1, AC400V, max 2200pF, -40~+85°C	cURus
7	9	Photo coupler (U3)	EVERLIGHT ELECTRONICS CO LTD	EL817	Double protection optical isolators, providing 5000 vac isolation	cURus
			COSMO ELECTRONICS CORP	K1010	Double protection optical isolators, providing 5000 vac isolation	cURus
			COSMO ELECTRONICS CORP	KP1010	Double protection optical isolators, providing 5000 vac isolation	cURus
			LITE-ON TECHNOLOGY CORP	LTV-817	Double protection optical isolators having an isolation voltage of 5300 Vrms	cURus
			FAIRCHILD SEMICONDUCTOR CORP	H11A817B	Double Protection Optical isolators, providing 5000 vac isolation	cURus
			FAIRCHILD SEMICONDUCTOR CORP	FOD817B	Double Protection Optical isolators, providing 5000 vac isolation	cURus
			SHARP CORP ELECTRONIC COMPONENTS AND DEVICES BU	PC817	Double protection optical isolated switches, providing 5000 Vac isolation	cURus
			BRIGHT LED ELECTRONICS CORP	BPC-817 A/B/C/D/L	Optical isolators, double protection isolation	cURus
			BRIGHT LED ELECTRONICS CORP	BPC-817M	Optical isolators, double protection isolation	cURus
			BRIGHT LED ELECTRONICS CORP	BPC-817S	Optical isolators, double protection isolation	cURus
			TOSHIBA CORP, SEMICONDUCTOR CO DISCRETE SEMICONDUCTOR DIV	TLP781F	Optical isolators, double protection type, rated 5000 Vac	cURus
			WALEX ELECTRONIC (WUXI) CO LTD	T2	Min. 1.6 mm thickness, min. V-0, 130°C	cURus
			WALEX ELECTRONIC (WUXI) CO LTD	T2A	Min. 1.6 mm thickness, min. V-0, 130°C	cURus
			WALEX ELECTRONIC (WUXI) CO LTD	T2B	Min. 1.6 mm thickness, min. V-0, 130°C	cURus

4.0 Critical Components						
Photo #	Item no.[1]	Name	Manufacturer/ trademark[2]	Type / model[2]	Technical data and securement means	Mark(s) of conformity [3]
			WALEX ELECTRONIC (WUXI) CO LTD	T4	Min. 1.6 mm thickness, min. V-0, 130°C	cURus
			DONGGUAN HE TONG ELECTRONICS CO LTD	CEM1	Min. 1.6 mm thickness, min. V-0, 130°C	cURus
			DONGGUAN HE TONG ELECTRONICS CO LTD	2V0	Min. 1.6 mm thickness, min. V-0, 130°C	cURus
			DONGGUAN HE TONG ELECTRONICS CO LTD	FR4	Min. 1.6 mm thickness, min. V-0, 130°C	cURus
			CHEERFUL ELECTRONIC (HK) LTD	02	Min. 1.6 mm thickness, min. V-0, 130°C	cURus
			CHEERFUL ELECTRONIC (HK) LTD	03	Min. 1.6 mm thickness, min. V-0, 130°C	cURus
			CHEERFUL ELECTRONIC (HK) LTD	03A	Min. 1.6 mm thickness, min. V-0, 130°C	cURus
			DONGGUAN DAYSUN ELECTRONIC CO LTD	DS2	Min. 1.6 mm thickness, min. V-0, 130°C	cURus
			SUZHOU CITY YILIHUA ELECTRONICS CO LTD	YLH-1	Min. 1.6 mm thickness, min. V-0, 130°C	cURus
			SHANGHAI AREX PRECISION ELECTRONIC CO LTD	04V0	Min. 1.6 mm thickness, min. V-0, 130°C	cURus
8	10	PCB	SHANGHAI AREX PRECISION ELECTRONIC CO LTD	02V0	Min. 1.6 mm thickness, min. V-0, 130°C	cURus
			BRITE PLUS ELECTRONICS (SUZHOU) CO LTD	DKV0-3A	Min. 1.6 mm thickness, min. V-0, 130°C	cURus
			BRITE PLUS ELECTRONICS (SUZHOU) CO LTD	DGV0-3A	Min. 1.6 mm thickness, min. V-0, 130°C	cURus
			KUOTIANG ENT LTD	C-2	Min. 1.6 mm thickness, min. V-0, 130°C	cURus
			KUOTIANG ENT LTD	C-2A	Min. 1.6 mm thickness, min. V-0, 130°C	cURus
			PACIFIC WIN INDUSTRIAL LTD	PW-02	Min. 1.6 mm thickness, min. V-0, 130°C	cURus

4.0 Critical Components						
Photo #	Item no.[1]	Name	Manufacturer/ trademark[2]	Type / model[2]	Technical data and securement means	Mark(s) of conformity [3]
			PACIFIC WIN INDUSTRIAL LTD	PW-03	Min. 1.6 mm thickness, min. V-0, 130°C	cURus
			SHENZHEN TONGCHUANGXIN ELECTRONICS CO LTD	TCX	Min. 1.6 mm thickness, min. V-0, 130°C	cURus
			YUANMAN PRINTED CIRCUIT CO LTD	1V0	Min. 1.6 mm thickness, min. V-0, 130°C	cURus
			SUZHOU XINKE ELECTRONICS CO LTD	XK-2	Min. 1.6 mm thickness, min. V-0, 130°C	cURus
			SUZHOU XINKE ELECTRONICS CO LTD	XK-3	Min. 1.6 mm thickness, min. V-0, 130°C	cURus
			KUNSHAN CITY HUA SHENG CIRCUIT BOARD CO LTD	HS-S	Min. 1.6 mm thickness, min. V-0, 130°C	cURus
			JIANGSU DIFEIDA ELECTRONICS CO LTD	DFD-1	Min. 1.6 mm thickness, min. V-0, 130°C	cURus
			HUIZHOU SHUNJIA ELECTRONICS CO LTD	SJ-B	Min. 1.6 mm thickness, min. V-0, 130°C	cURus
			Various	Various	Min. 1.6 mm thickness, min. V-0, 130°C, Fully comply with UL 796	cURus
			KUNSHAN NEW ZHICHENG ELECTRONICS TECHNOLOGIES CO LTD	1015	Min. 20 AWG, Min. 300V, Min. 80°C	cURus
			KUNSHAN NEW ZHICHENG ELECTRONICS TECHNOLOGIES CO LTD	1007	Min. 20 AWG, Min. 300V, Min. 80°C	cURus
			KUNSHAN NEW ZHICHENG ELECTRONICS TECHNOLOGIES CO LTD	1185	Min. 20 AWG, Min. 300V, Min. 80°C	cURus
			ZHUANG SHAN CHUAN ELECTRICAL PRODUCTS (KUNSHAN) CO LTD	1015	Min. 20 AWG, Min. 300V, Min. 80°C	cURus

4.0 Critical Components						
Photo #	Item no.[1]	Name	Manufacturer/ trademark[2]	Type / model[2]	Technical data and securement means	Mark(s) of conformity [3]
5	11	Earthing wire for Class I models	ZHUANG SHAN CHUAN ELECTRICAL PRODUCTS (KUNSHAN) CO LTD	1007	Min. 20 AWG, Min. 300V, Min. 80°C	cURus
			ZHUANG SHAN CHUAN ELECTRICAL PRODUCTS (KUNSHAN) CO LTD	1185	Min. 20 AWG, Min. 300V, Min. 80°C	cURus
			DONGGUAN CHUANTAI WIRE PRODUCTS CO LTD	1015	Min. 20 AWG, Min. 300V, Min. 80°C	cURus
			DONGGUAN CHUANTAI WIRE PRODUCTS CO LTD	1007	Min. 20 AWG, Min. 300V, Min. 80°C	cURus
			DONGGUAN CHUANTAI WIRE PRODUCTS CO LTD	1185	Min. 20 AWG, Min. 300V, Min. 80°C	cURus
			YONG HAO ELECTRICAL INDUSTRY CO LTD	1015	Min. 20 AWG, Min. 300V, Min. 80°C	cURus
			YONG HAO ELECTRICAL INDUSTRY CO LTD	1007	Min. 20 AWG, Min. 300V, Min. 80°C	cURus
			YONG HAO ELECTRICAL INDUSTRY CO LTD	1185	Min. 20 AWG, Min. 300V, Min. 80°C	cURus
			DONGGUAN GUNEETAL WIRE & CABLE CO LTD	1015	Min. 20 AWG, Min. 300V, Min. 80°C	cURus
			DONGGUAN GUNEETAL WIRE & CABLE CO LTD	1007	Min. 20 AWG, Min. 300V, Min. 80°C	cURus
			DONGGUAN GUNEETAL WIRE & CABLE CO LTD	1185	Min. 20 AWG, Min. 300V, Min. 80°C	cURus
			SHENG YU ENTERPRISE CO LTD	1015	Min. 20 AWG, Min. 300V, Min. 80°C	cURus
			SHENG YU ENTERPRISE CO LTD	1007	Min. 20 AWG, Min. 300V, Min. 80°C	cURus

4.0 Critical Components						
Photo #	Item no.[1]	Name	Manufacturer/ trademark[2]	Type / model[2]	Technical data and securement means	Mark(s) of conformity [3]
			SHENG YU ENTERPRISE CO LTD	1185	Min. 20 AWG, Min. 300V, Min. 80°C	cURus
			KUNSHAN XINGHONGMENG ELECTRONIC CO LTD	1015	Min. 20 AWG, Min. 300V, Min. 80°C	cURus
			KUNSHAN XINGHONGMENG ELECTRONIC CO LTD	1007	Min. 20 AWG, Min. 300V, Min. 80°C	cURus
			KUNSHAN XINGHONGMENG ELECTRONIC CO LTD	1185	Min. 20 AWG, Min. 300V, Min. 80°C	cURus
			SUZHOU YEMAO ELECTRONIC CO LTD	1015	Min. 20 AWG, Min. 300V, Min. 80°C	cURus
			SUZHOU YEMAO ELECTRONIC CO LTD	1007	Min. 20 AWG, Min. 300V, Min. 80°C	cURus
			SUZHOU YEMAO ELECTRONIC CO LTD	1185	Min. 20 AWG, Min. 300V, Min. 80°C	cURus
			Various	Various	Min. 20 AWG, Min. 300V, Min. 80°C	cURus
5	12	Heat-shrinkable tubing	SHENZHEN WOER HEAT-SHRINKABLE MATERIAL CO LTD	RSFR	600V, 125°C	cURus
			SHENZHEN WOER HEAT-SHRINKABLE MATERIAL CO LTD	RSFR-H	600V, 125°C	cURus
			SHENZHEN WOER HEAT-SHRINKABLE MATERIAL CO LTD	RSFR-HPF	600V, 125°C	cURus
			QIFURUI ELECTRONICS CO	QFR-h	600V, 125°C	cURus
			DONGGUAN SALIPT CO LTD	SALIPT S-901-300	Min. 300V, 125°C	cURus
			DONGGUAN SALIPT CO LTD	SALIPT S-901-600	Min. 300V, 125°C	cURus

4.0 Critical Components						
Photo #	Item no.[1]	Name	Manufacturer/ trademark[2]	Type / model[2]	Technical data and securement means	Mark(s) of conformity [3]
			GUANGZHOU KAIHENG ENTERPRISE GROUP	K-2 (+)	Min. 300V, 125°C	cURus
			GUANGZHOU KAIHENG ENTERPRISE GROUP	K-2 (CB)	Min. 300V, 125°C	cURus
			CHANGYUAN ELECTRONICS (SHENZHEN) CO LTD	CB-HFT	Min. 300V, 125°C	cURus
13	13	Plug portion	GlobTek	Various	NEMA 1-15P	NR
7	14	Transformer (T1)	GlobTek/ BOAM/ HAOPUWEI	TF042	For model GT*96180 series, output voltage range:5.0V-8.0V; Class B with insulation system below.	NR
				TF043	For model GT*96180 series, output voltage range:8.1V-14.9V; Class B with insulation system below.	NR
				TF044	For model GT*96180 series, output voltage range:15.0V-18.9V; Class B with insulation system below.	NR
				TF045	For model GT*96180 series, output voltage range:19.0V-30.0V; Class B with insulation system below.	NR
				TF046	For model GT*96180 series, output voltage range:30.1V-48.0V; Class B with insulation system below.	NR
				TF064	For model GT*96180 POE series, output voltage: 18V; Class B with insulation system below.	NR
				TF065	For model GT*96180 POE series, output voltage: 24V; Class B with insulation system below.	NR
				TF066	For model GT*96180 POE series, output voltage: 36V; Class B with insulation system below.	NR
				TF067	For model GT*96180 POE series, output voltage: 48V; Class B with insulation system below.	NR
				TF063	For model GT*96180 POE series, output voltage: 54V, 56V; Class B with insulation system below.	NR

4.0 Critical Components						
Photo #	Item no.[1]	Name	Manufacturer/ trademark[2]	Type / model[2]	Technical data and securement means	Mark(s) of conformity [3]
7	14a	Insulation system (Not shown)			Class B	cURus
			GLOBTEK INC	GTX-130-TM	Class B	cURus
			SHAN DONG BOAM ELECTRIC CO LTD	BOAM-01	Class B	cURus
			WUXI HAOPUWEI ELECTRONICS CO LTD	ZT-130	Class B	cURus
7	14b	Bobbin (Not shown)	CHANG CHUN PLASTICS CO LTD	T375J	V-0, 150°C, thickness 0,45 mm min.	cURus
			CHANG CHUN PLASTICS CO LTD	T375HF	V-0, 150°C, thickness 0,45 mm min.	cURus
			CHANG CHUN PLASTICS CO LTD	4130	V-0, 140°C, thickness 0,74 mm min.	cURus
			SUMITOMO BAKELITE CO LTD	PM-9820	V-0, 150°C, thickness 0,45 mm min.	cURus
			HITACHI CHEMICAL CO LTD	CP-J-8800	V-0, 150°C, thickness 0,45 mm min.	cURus
7	14c	Magnet wire (Not shown)	PACIFIC ELECTRIC WIRE & CABLE (SHENZHEN) CO LTD	UEWN/U	MW28-C, 130°C	cURus
			PACIFIC ELECTRIC WIRE & CABLE (SHENZHEN) CO LTD	UEWS/U	MW75-C, 130°C	cURus
			JUNG SHING WIRE CO LTD	UEW-4	MW75-C, 130°C	cURus
			JUNG SHING WIRE CO LTD	UEY-2	MW28-C, 130°C	cURus
			JIANGSU HONGLIU MAGNET WIRE TECHNOLOGY CO LTD	2UEW/130	MW75-C, 130°C	cURus
			CHANGZHOU DAYANG WIRE & CABLE CO LTD	2UEW/130	MW75-C, 130°C	cURus
			WUXI JUFENG COMPOUND LINE CO LTD	2UEWB	MW75#, 130°C	cURus
			JIANGSU DARTONG M & E CO LTD	UEW	MW75-C, 130°C	cURus

4.0 Critical Components						
Photo #	Item no.[1]	Name	Manufacturer/ trademark[2]	Type / model[2]	Technical data and securement means	Mark(s) of conformity [3]
			SHANDONG SAINT ELECTRIC CO LTD	UEW/130	MW75#, 130°C	cURus
			ZHEJIANG LANGLI ELECTRIC EQUIPMENTS CO LTD	UEW	MW79#, 130°C	cURus
7	14d	Triple-insulated wire (Not shown)	GREAT LEOFLON INDUSTRIAL CO LTD	TRW(B)	Reinforced Insulation, rated 130°C (Class B), 1.41 kVolts peak for Information Technology;	cURus
			COSMOLINK CO LTD	TIW-M(B)	Reinforced Insulation, rated 130°C (Class B), 1.41 kVolts peak for Information Technology;	cURus
			FURUKAWA ELECTRIC CO LTD	TEX-E	Reinforced Insulation, rated 130°C (Class B), 1.41 kVolts peak for Information Technology;	cURus
			TOTOKU ELECTRIC CO LTD	TIW-2	Reinforced Insulation, rated 130°C (Class B), 1.40 kVolts peak for Information Technology;	cURus
			E&B TECHNOLOGY CO LTD	E&B-XXXB	Reinforced Insulation, rated 130°C (Class B), 1.40 kVolts peak for Information Technology;	cURus
			E&B TECHNOLOGY CO LTD	E&B-XXXB-1	Reinforced Insulation, rated 130°C (Class B), 1.40 kVolts peak for Information Technology;	cURus
			CHANGYUAN ELECTRONICS (SHENZHEN) CO LTD	CB-TIW	Reinforced Insulation, rated 130°C (Class B), 1.41 kVolts peak for Information Technology;	cURus
			SHENZHEN JIUDING NEW MATERIAL CO LTD	DTIW-B	Reinforced Insulation, rated 130°C (Class B), 1.40 kVolts peak for Information Technology;	cURus
			3M COMPANY ELECTRICAL MARKETS DIV (EMD)	1350F-1	130°C	cURus
			3M COMPANY ELECTRICAL MARKETS DIV (EMD)	1350T-1	130°C	cURus
			3M COMPANY ELECTRICAL MARKETS DIV (EMD)	44	130°C	cURus
			BONDTEC PACIFIC CO LTD	370S	130°C	cURus

4.0 Critical Components						
Photo #	Item no.[1]	Name	Manufacturer/ trademark[2]	Type / model[2]	Technical data and securement means	Mark(s) of conformity [3]
7	14e	Insulating tape (Not shown)	JINGJIANG YAHUA PRESSURE SENSITIVE GLUE CO LTD	PZ	130°C	cURus
			JINGJIANG YAHUA PRESSURE SENSITIVE GLUE CO LTD	CT	130°C	cURus
			JINGJIANG YAHUA PRESSURE SENSITIVE GLUE CO LTD	WF	130°C	cURus
			JINGJIANG JINGYI ADHESIVE PRODUCT CO LTD	JY25-A	130°C	cURus
			CHANG SHU LIANG YI TAPE INDUSTRY CO LTD	LY-XX	130°C	cURus
7	14f	PTFE tubing (Not shown)	GREAT HOLDING INDUSTRIAL CO LTD	TFT	300V, 200°C	cURus
			GREAT HOLDING INDUSTRIAL CO LTD	TFS	600V, 200°C	cURus
			SHENZHEN WOER HEAT-SHRINKABLE MATERIAL CO LTD	WF	600V, 200°C	cURus
			CHANGYUAN ELECTRONICS (SHENZHEN) CO LTD	CB-TT-T	300V, 200°C	cURus
			CHANGYUAN ELECTRONICS (SHENZHEN) CO LTD	CB-TT-S	600V, 200°C	cURus
			DONGGUAN XIANGQUAN PRINTING CO LTD	XQ03	Temperature range: -40~+80°C;	cURus
			FAN JA PAPER PRINTING CO LTD	FJ-03-3	Temperature range: -40~+80°C;	cURus
			FAN JA PAPER PRINTING CO LTD	FJ07	Temperature range: -40~+80°C;	cURus

4.0 Critical Components						
Photo #	Item no.[1]	Name	Manufacturer/ trademark[2]	Type / model[2]	Technical data and securement means	Mark(s) of conformity [3]
1	15	Adhesive-Type Label (Not shown)	E-LIN ADHESIVE LABEL CO LTD	EL-15	Temperature range: -40~+80°C;	cURus
			SHENZHEN CORWIN PRINTING CO LTD	CW-01	Temperature range: -40~+80°C;	cURus
			YUEN CHANG SPECIAL PRINTING (SHENZHEN) CO LTD	JL-08	Temperature range: 0~+80°C;	cURus
			GlobTek	Various	Permanently secured Engraving or Silkscreen or Laser printing	NR
			Various	Various	Temperature range: min. -40 ~+80°C; Certified according UL 969.	cETLus cULus cCSAus
11	16	Insulating sheet (Optional)	FORMEX,DIV OF IL TOOL WORKS INC, FRMRLY FASTEX, DIV OF IL TOOL WORKS INC	FORMEX GK series	V-0, min. 0.4 mm thickness, 115°C	cURus
			MIANYANG LONGHUA FILM CO LTD	PP-WT-20	VTM-0, min. 0.4 mm thickness, 65°C	cURus
			SKC CO LTD	SH71S	VTM-2, min. 0.4 mm thickness, 105°C	cURus
			TORAY INDUSTRIES INC	Lumirror H10	VTM-2, min. 0.4 mm thickness, 105°C	cURus
			SABIC INNOVATIVE PLASTICS US L L C	FR60 series	V-0, min. 0.4 mm thickness, 130°C	cURus
			SABIC INNOVATIVE PLASTICS US L L C	FR63 series	V-0, min. 0.4 mm thickness, 130°C	cURus
			SABIC INNOVATIVE PLASTICS US L L C	FR65 series	V-0, min. 0.4 mm thickness, 130°C	cURus
			SABIC INNOVATIVE PLASTICS US L L C	FR7 series	V-0, min. 0.4 mm thickness, 130°C	cURus
			SABIC INNOVATIVE PLASTICS US L L C	FR700 series	V-0, min. 0.4 mm thickness, 130°C	cURus
			MIANYANG LONGHUA FILM CO LTD	PP-BK series	V-0, min. 0.4 mm thickness, 80°C	cURus

4.0 Critical Components

Photo #	Item no.[1]	Name	Manufacturer/ trademark[2]	Type / model[2]	Technical data and securement means	Mark(s) of conformity [3]
			MIANYANG LONGHUA FILM CO LTD	PP-WT series	V-0, min. 0.4 mm thickness, 80°C	cURus
			ITW ELECTRONICS COMPONENTS/ PRODUCTS (SHANGHAI) CO LTD	FORMEX-18	V-0, min. 0.4 mm thickness, 100°C	cURus
			ITW ELECTRONICS COMPONENTS/ PRODUCTS (SHANGHAI) CO LTD	FORMEX-17	V-0, min. 0.4 mm thickness, 100°C	cURus

NOTES:
1) Not all item numbers are indicated (called out) in the photos, as their location is obvious.
2) “Various“ means any type, from any manufacturer that complies with the "Technical data and securement means" and meets the "Mark(s) of conformity" can be used.
3) Indicates specific marks to be verified, which assures the agreed level of surveillance for the component. "NR" - indicates Unlisted and only visual examination is necessary. "See 5.0" indicates Unlisted components or assemblies to be evaluated periodically refer to section 5.0 for details.

5.0 Critical Unlisted CEC Components
No Unlisted CEC components are used in this report.

6.0 Critical Features

Recognized Component - A component part, which has been previously evaluated by an accredited certification body with restrictions and must be evaluated as part of the basic product considering the restrictions as specified by the Conditions of Acceptability.

Listed Component - A component part, which has been previously Listed or Certified by an accredited Certification Organization with no restrictions and is used in the intended application within its ratings.

Unlisted Component - A part that has not been previously evaluated to the appropriate designated component standard. It may also be a Listed or Recognized component that is being used outside of its evaluated Listing or component recognition.

Critical Features/Components - An essential part, material, subassembly, system, software, or accessory of a product that has a direct bearing on the product's conformance to applicable requirements of the product standard.

Construction Details - For specific construction details, reference should be made to the photographs and descriptions. All dimensions are approximate unless specified as exact or within a tolerance. In addition to the specific construction details described in this Report, the following general requirements also apply.

1. Spacing - In primary circuits, 2.5 mm minimum spacing are maintained through air and 2.5 mm minimum spacing are maintained over surfaces of insulating material between current-carrying parts of opposite polarity and 6.5 mm minimum spacing are maintained through air and 6.5 mm minimum spacing are maintained over surfaces between such current-carrying parts and dead-metal parts or low voltage isolated circuits.
2. Mechanical Assembly - Components such as switches, fuseholders, connectors, wiring terminals and display lamps are mounted and prevented from shifting or rotating by the use of lockwashers, starwashers, or other mounting format that prevents turning of the component.
3. Corrosion Protection - All ferrous metal parts are protected against corrosion by painting, plating or the equivalent.
4. Accessibility of Live Parts - For adapter models, all uninsulated live parts in primary circuitry are housed within a non-metallic enclosure constructed with no openings and metal enclosure earthed with ventilation holes other than those specifically described in Sections 4 and 5.
5. Grounding - All exposed dead-metal parts and all dead-metal parts within the enclosure that are exposed are connected to the grounding lead of the power supply cord and the equipment grounding terminal.
6. Polarized Connection - This product is provided with a polarized power supply connection.
7. Internal Wiring - Internal wiring is routed away from sharp or moving parts. Internal wiring leads terminating in soldered connections are made mechanically secure prior to soldering. Recognized Component separable (quick disconnect) connectors of the positive detent type, closed loop connectors, or other types specifically described in the text of this report are also acceptable as internal wiring terminals. At pointswhere internal wiring passes through metal walls or partitions, the wiring insulation is protected against abrasion or damage by plastic bushings or grommets. UL approved wiring is used as secondary output lead wire of SELV circuits.
8. Schematics - Refer to Illustration No(s). 2a&2b&2c, 3a&3b&3c for schematics & PCB layout requiring verification during Field Representative Inspection Audits.
9. Markings - The product is marked as follows: brand name, model number, electrical ratings, manufacturer. Refer to Illustration No. 4 for details.
10. Cautionary Markings - Refer to illustrations No. 4 for details.
11. Safety Instructions - Instructions for installation and use of this product are provided by the manufacturer. They are kept in file and need not be repeated here.

7.0 Illustrations

Illustration 1 - Model list

GT*96180-** Interchangeable plug models**

Model	Output Voltage	Max. output current	Max. output power
GT*96180-*07**	5-7V	3.6A	18W
GT*96180-*11**	7.1-11V	2.53A	18W
GT*96180-*17.9**	11.1-17.9V	1.62A	18W
GT*96180-*30**	18-30V	1.0A	18W
GT*96180-*38**	30.1-38V	0.6A	18W
GT*96180-*48**	38.1-48V	0.47A	18W

GT*96180-*-T2/T2A/T3/T3A* Desktop models**

Model	Output Voltage	Max. output current	Max. output power
GT*96180-*07*-T2/T2A/T3/T3A*	5-7V	3.6A	18W
GT*96180-*11*-T2/T2A/T3/T3A*	7.1-11V	2.53A	18W
GT*96180-*17.9*-T2/T2A/T3/T3A*	11.1-17.9V	1.62A	18W
GT*96180-*30*-T2/T2A/T3/T3A*	18-30V	1.0A	18W
GT*96180-*38*-T2/T2A/T3/T3A*	30.1-38V	0.6A	18W
GT*96180-*48*-T2/T2A/T3/T3A*	38.1-48V	0.47A	18W

GT*96180-*-T2/T2A/T3/T3A/R2/R3A-AP/PP/SP**

Model	Output Voltage	Max. output current	Max. output power
GT-96180-*30-12.0-T2/T2A/T3/T3A/R2/R3A-AP/PP/SP*	18V	1A	18W
GT-96180-*30-6.0-T2/T2A/T3/T3A/R2/R3A-AP/PP/SP*	24V	0.75A	18W
GT-96180-*38-2.0-T2/T2A/T3/T3A/R2/R3A-AP/PP/SP*	36V	0.5A	18W
GT-96180-*48-T2/T2A/T3/T3A/R2/R3A-AP/PP/SP*	48V	0.375A	18W
GT-96180-*54-T2/T2A/T3/T3A/R2/R3A-AP/PP/SP*	54V	0.33A	18W
GT-96180-*56-T2/T2A/T3/T3A/R2/R3A-AP/PP/SP*	56V	0.32A	18W

7.0 Illustrations

Illustration 2a - Schematics

For GT*96180-**** direct plug-in model series**

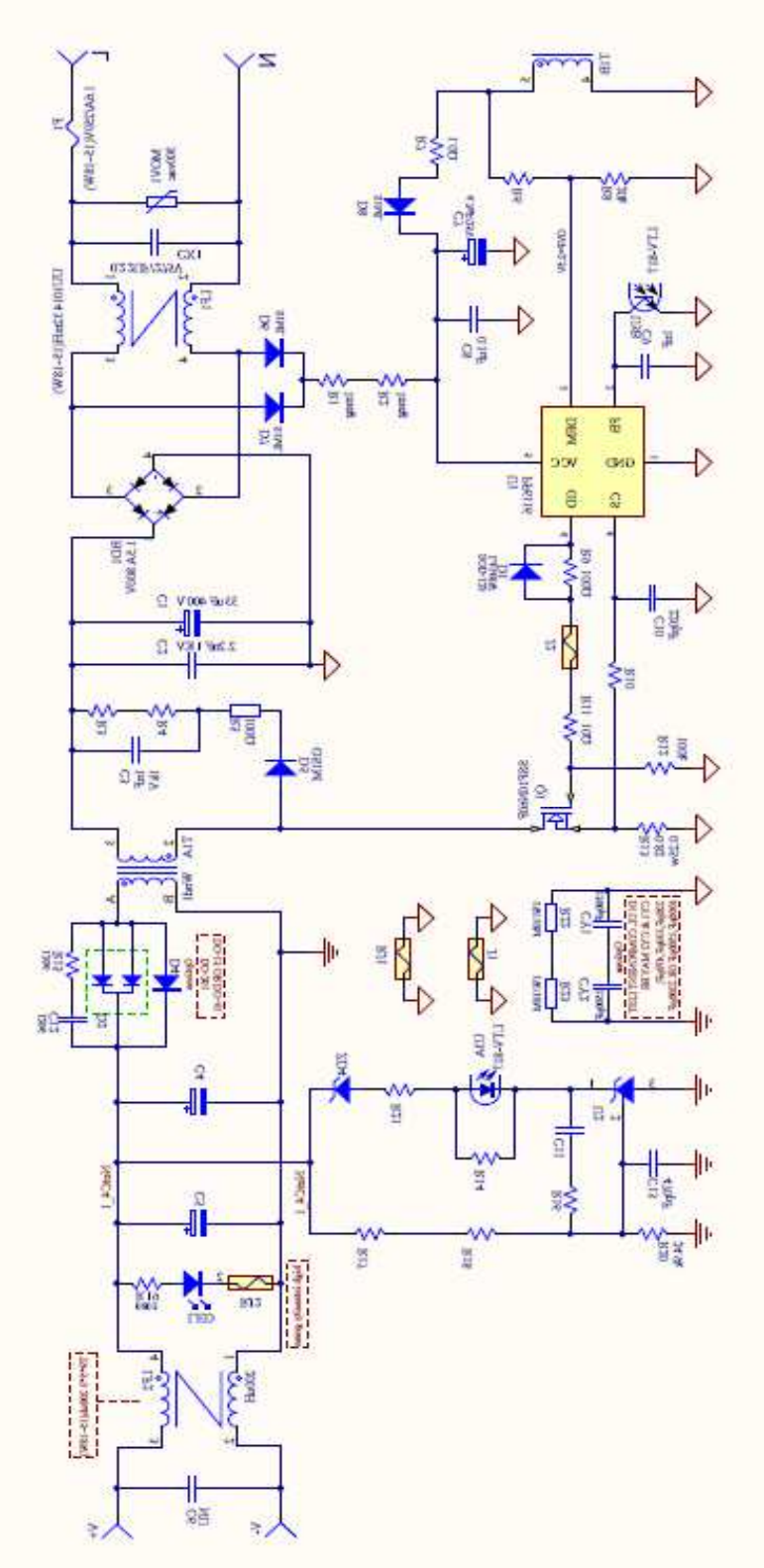

7.0 Illustrations

Illustration 2b - Schematics

For GT*96180-**** desktop model series**

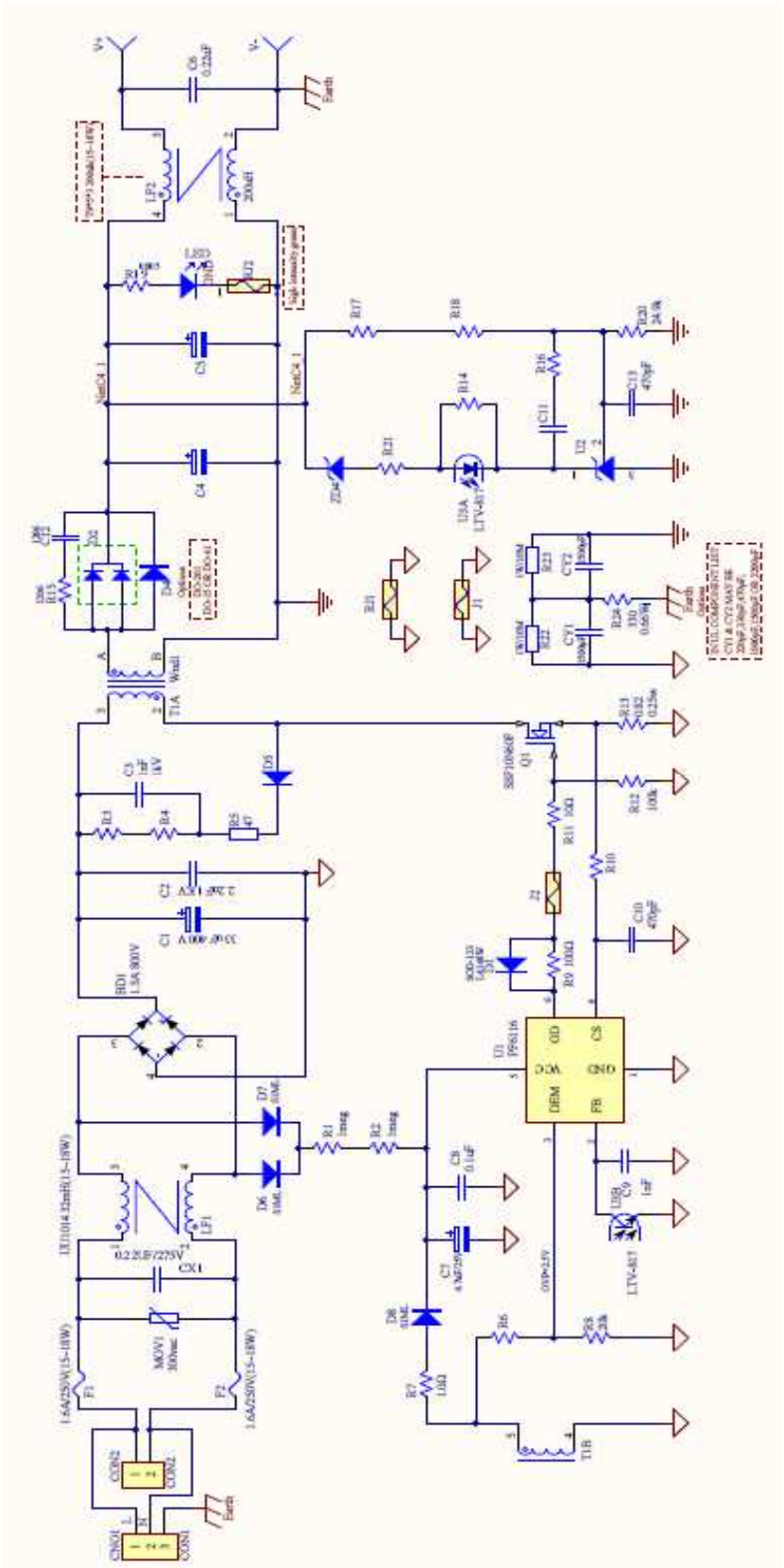

7.0 Illustrations

Illustration 2c - Schematics

For GT*96180-**** desktop model POE series**

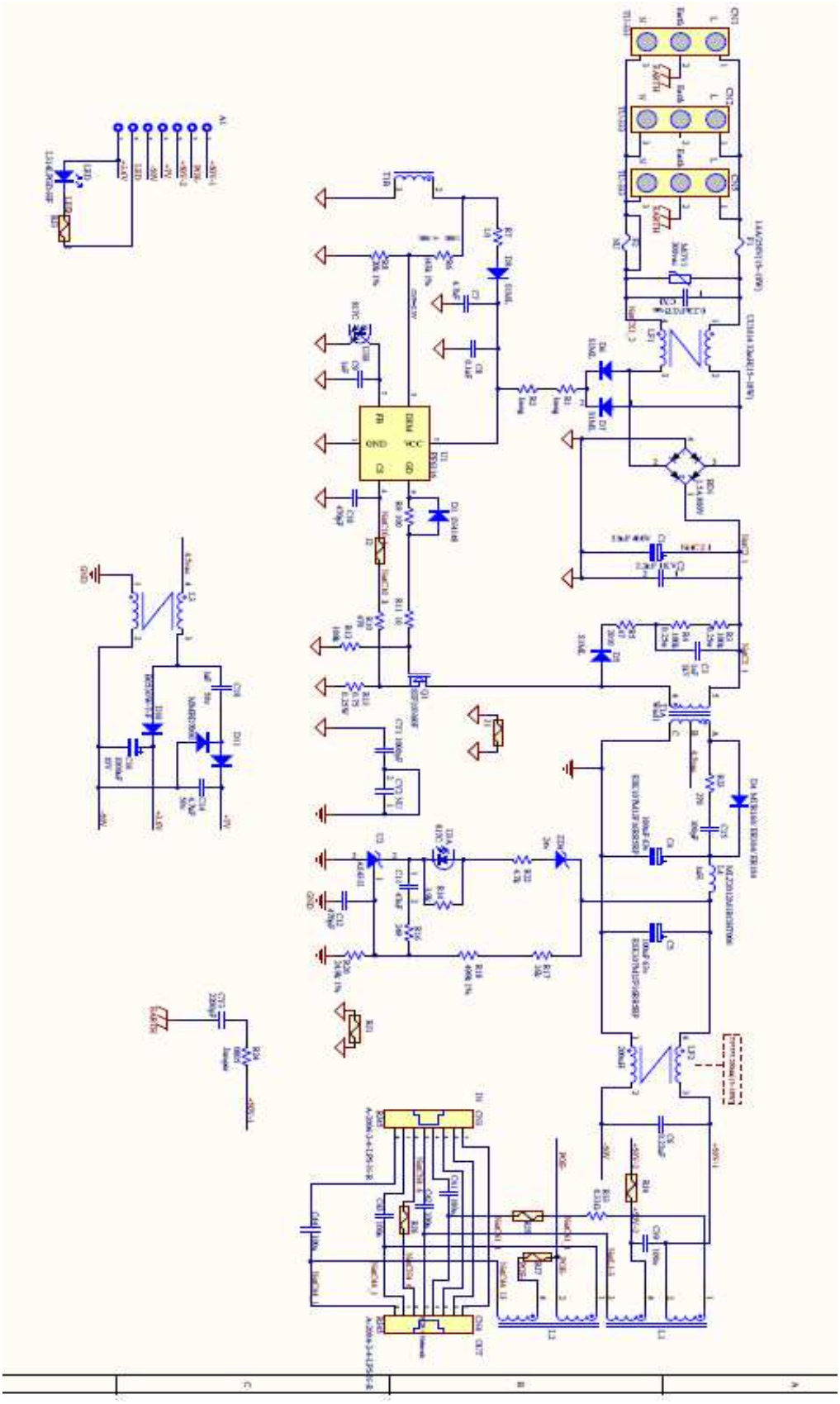

7.0 Illustrations

Illustration 3a - PCB LAYOUT for GT*96180-**** direct plug-in model series**

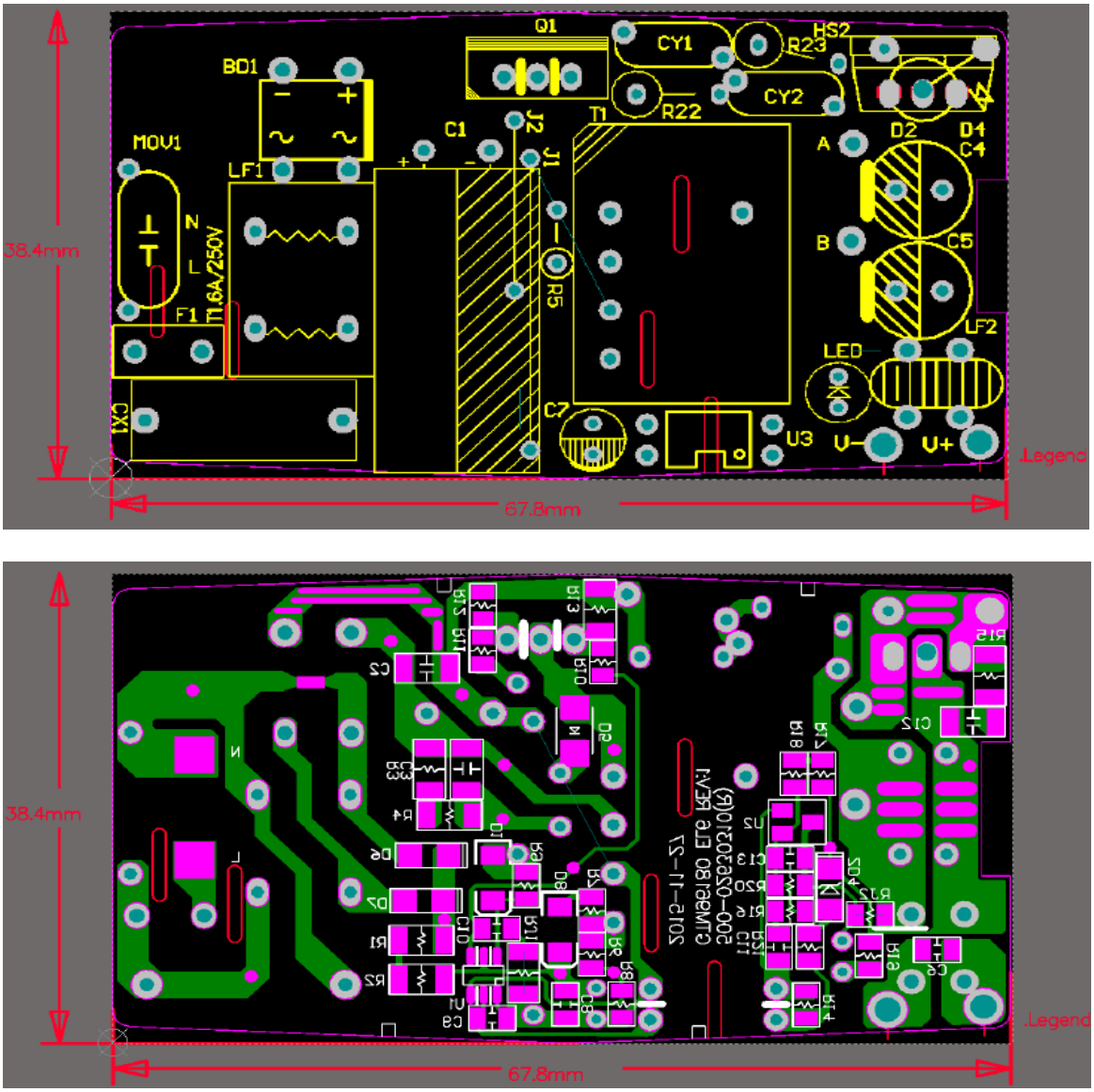

7.0 Illustrations

Illustration 3b - PCB LAYOUT for GT*96180-**** desktop model series**

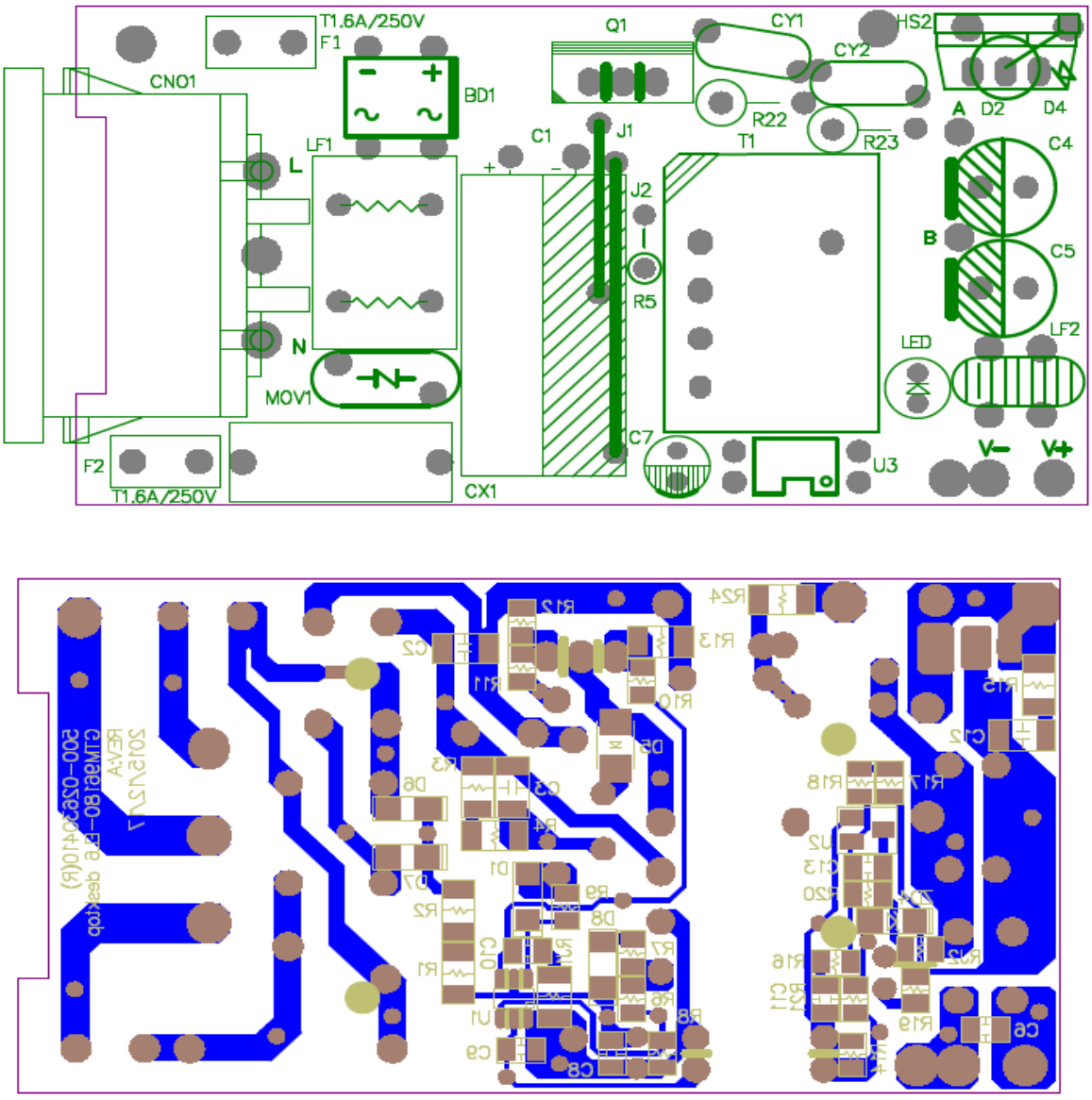

7.0 Illustrations

Illustration 3c - PCB LAYOUT for GT*96180-**** desktop model POE series**

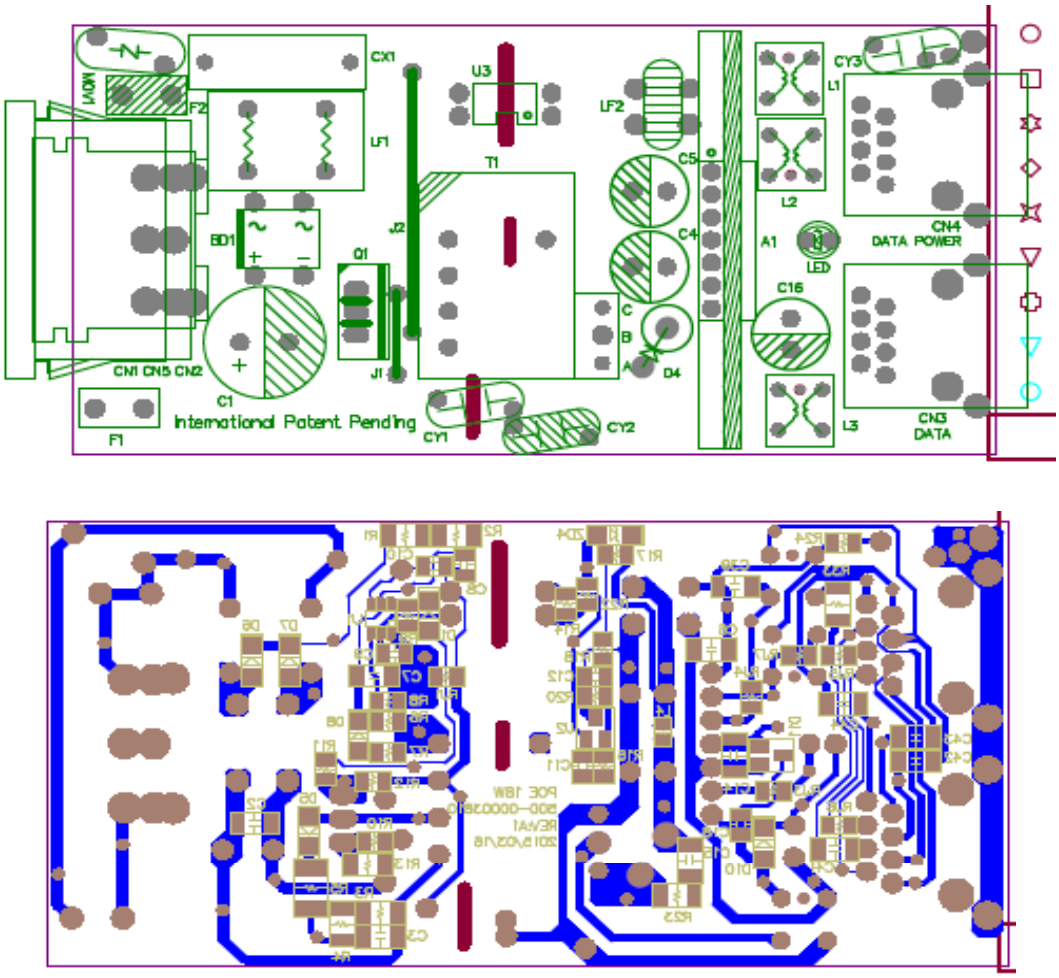

7.0 Illustrations

Illustration 4 - Marking

Note:
1. The marking plates of the other models listed in this report are identical with below except model name and output parameter.
2. The date code of manufacturing is presented as WWYY, YY = manufacturing year, WW = the week of the manufacturing year, e.g. 0216 = The second week of 2016.

8.0 Test Summary					
Evaluation Period	18-Nov-2015 to 25-May-2016			Project No.	151100937SHA
Sample Rec. Date	18-Nov-2015	Condition	Prototype	Sample ID.	0151118-03-001~045
Test Location	Building No.86, 1198 Qinzhou Road (North), Shanghai 200233, China				
Test Procedure	Testing Lab				
Determination of the result includes consideration of measurement uncertainty from the test equipment and methods. The product was tested as indicated below with results in conformance to the relevant test criteria.					
The following tests were performed:					

Test Description	Standard for Safety for Information Technology Equipment Safety Part 1: General Requirements: UL 60950-1 Issued: 2007/03/27 Ed: 2 Rev: 2014/10/14 & CSA C22.2 No. 60950-1 Issued: 2007/03/27 Ed: 2 (R2012) Amd. 1: 2011, Amd. 2: 2014 Clause
Input test	1.6.2
Marking test	1.7.11
Finger test	2.1.1.1 b)
Pin test	2.1.1.1 c)
Energy hazards test	2.1.1.5
Capacitor discharging test	2.1.1.7
Voltage under normal conditions test	2.2.2
Voltage under fault conditions test	2.2.3
TNV circuits	2.3
Limited current circuits test	2.4
Limited power sources test	2.5
Humidity condition test	2.9.2
Determination of working voltage test	2.10.2
Clearances measurement	2.10.3
Creepage distances measurement	2.10.4
Solid insulation measurement	2.10.5
Steady force test, 10N	4.2.2
Steady force test, 250N	4.2.4
Drop test	4.2.6
Stress relief test	4.2.7
Strain on socket-outlet test	4.3.6
Temperature tests	4.5.2
Resistance to abnormal heat	4.5.5
Touch current test	5.1
Electric strength test	5.2
Abnormal operating and fault conditions test	5.3

Test Description	UL 1310 Sixth Edition Dated August 26, 2011 which contains Revisions through and including December 12, 2014
Maximum moment measurement	7.11
Integral plug dimension check	14.1.1
Direct plug-in blade secureness test	43
Direct plug-in security of input contacts test	44.1
Abuse tests	46

8.1 Signatures

A representative sample of the product covered by this report has been evaluated and found to comply with the applicable requirements of the standards indicated in Section 1.0.

Completed by:	Albert Zhou	Reviewed by:	Will Wang
Title:	Engineer	Title:	Supervisor
Signature:	Albert Zhou	Signature:	Will Wang

9.0 Correlation Page For Multiple Listings	
The following products, which are identical to those identified in this report except for model number and Listee name, are authorized to bear the ETL label under provisions of the Intertek Multiple Listing Program.	
BASIC LISTEE	GlobTek, Inc.
Address	186 Veterans Dr. Northvale, NJ 07647 USA
Country	USA
Product	ITE Power Supply

MULTIPLE LISTEE 1	None
Address	
Country	
Brand Name	
ASSOCIATED MANUFACTURER	
Address	
Country	

MULTIPLE LISTEE 1 MODELS	BASIC LISTEE MODELS

MULTIPLE LISTEE 2	None
Address	
Country	
Brand Name	
ASSOCIATED MANUFACTURER	
Address	
Country	

MULTIPLE LISTEE 2 MODELS	BASIC LISTEE MODELS

MULTIPLE LISTEE 3	None
Address	
Country	
Brand Name	
ASSOCIATED MANUFACTURER	
Address	
Country	

MULTIPLE LISTEE 3 MODELS	BASIC LISTEE MODELS

10.0 General Information

The Applicant and Manufacturer have agreed to produce, test and label ETL Listed products in accordance with the requirements of this Report. The Manufacturer has also agreed to notify Intertek and to request authorization prior to using alternate parts, components or materials.

COMPONENTS

Components used shall be those itemized in this Intertek report covering the product, including any amendments and/or revisions.

LISTING MARK

The ETL Listing mark applied to the products shall either be separable in form, such as labels purchased from Intertek, or on a product nameplate or other media only as specifically authorized by Intertek. Use of the mark is subject to the control of Intertek.

The mark must include the following four items:

1) applicable country identifiers "US" and/or "C" or "US", "C" and "EU"
2) the word "Listed" or "Classified" or "Recognized Component" (whichever is appropriate)
3) a control number issued by Intertek
4) a product descriptor that identifies the standards used for certification. Example:

For US standards, the words, “Conforms to” shall appear with the standard number along with the word, “Standard” or “Std.” Example: “Conforms to ANSI/UL Std. XX.”

For Canadian standards, the words “Certified to CAN/CSA Standard CXX No. XX.” shall be used, or abbreviated, “Cert. to CAN/CSA Std. CXX No. XX.”

Can be used together when both standards are used.

Note: A facsimile must be submitted to Intertek, Attn: Follow-up Services for approval prior to use. The facsimile need not have a control number. A control number will be issued **after signed Certification Agreements** have been received by the Follow-up Services office, approval of the facsimile of your proposed Listing Mark, satisfactory completion of the Listing Report, and scheduling of a factory assessment in your facility.

MANUFACTURING AND PRODUCTION TESTS

Manufacturing and Production Tests shall be performed as required in this Report.

FOLLOW-UP SERVICE

Periodic unannounced audits of the manufacturing facility (and any locations authorized to apply the mark) shall be scheduled by Intertek. An audit report shall be issued after each visit. Special attention will be given to the following:

1. Conformance of the manufactured product to the descriptions in this Report.
2. Conformance of the use of the ETL mark with the requirements of this Report and the Certification Agreement.
3. Manufacturing changes.
4. Performance of specified Manufacturing and Production Tests.

In the event that the Intertek representative identifies non-conformance(s) to any provision of this Report, the Applicant shall take one or more of the following actions:

1. Correct the non-conformance.
2. Remove the ETL Mark from non-conforming product.
3. Contact the issuing product safety evaluation center for instructions.

10.1 Evaluation of Unlisted Components

Because Unlisted Components are uncontrolled, and they do not fall under a third party follow up program, Intertek may require these components to be tested and/or evaluated at least once annually, more often for certain components, as part of the independent certification process. The Unlisted Components in Section 5.0 require testing and/or evaluation as indicated.

Note to Intertek Follow Up Inspector: The Component Evaluation Center, CEC, will notify you in writing when these components must be selected and sent to the CEC for re-evaluation

Ship the samples to:
Intertek Testing Services Shanghai Limited
ETL Component Evaluation Center
Building No. 86, 1198 Qinzhou Road (North)
Shanghai 200233, China
Attn: Ms. Dansy Xu
Sample Disposition: Due to the destructive nature of the testing, all samples will be discarded at the conclusion of testing unless, the manufacturer specifically requests the return of the samples. The request for return must accompany the initial component shipment.

11.0 Manufacturing and Production Tests

The manufacturer agrees to conduct the following Manufacturing and Production Tests as specified:

Required Tests

Dielectric Voltage Withstand Test

11.1 Dielectric Voltage Withstand Test

Method

One hundred percent of production of the products covered by this Report shall be subjected to a routine production line dielectric withstand test.

The test shall be conducted on products, which are fully assembled. Prior to applying the test potential, all switches, contactors, relays, etc., should be closed so that all primary circuits are energized by the test potential. If all primary circuits cannot be tested at one time, then separate applications of the test potential shall be made.

The test voltage specified below shall be applied between primary circuits and accessible dead-metal parts. The test voltage may be gradually increased to the specified value but must be maintained at the specified value for one second or one minute as required.

Test Equipment

The test equipment shall incorporate a transformer with an essentially sinusoidal output, a means to indicate the applied test potential, and an audible and/or visual indicator of dielectric breakdown.

The test equipment shall incorporate a voltmeter in the output circuit to indicate directly the applied test potential if the rated output of the test equipment is less than 500VA.

If the rated output of the test equipment is 500VA or more, the applied test potential may be indicated by either:

1 - a voltmeter in the primary circuit;

2 - a selector switch marked to indicate the test potential; or

3 - a marking in a readily visible location to indicate the test potential for test equipment having a single test potential output.

In cases 2 and 3, the test equipment shall include a lamp or other visual means to indicate that the test potential is present at the test equipment output. All test equipment shall be maintained in current calibration.

Products Requiring Dielectric Voltage Withstand Test:

Product	Test Voltage	Test Time
Between L/N and secondary output	3000Vac	1 s

12.0 Revision Summary

The following changes are in compliance with the declaration of Section 8.1:

Date/ Proj # Site ID	Project Handler/ Reviewer	Section	Item	Description of Change
				None