中国认可
国际互认
检测
TESTING
CNAS L3110

TEST REPORT

Reference No.	:	WTX26D08232438Z
Applicant	:	GlobTek, Inc.
Address	:	186 Veterans Dr. Northvale, NJ 07647 USA
Manufacturer	:	GlobTek, Inc.
Address	:	186 Veterans Dr. Northvale, NJ 07647 USA
Product Name	:	ITE/ICT Power Supply
Model(s)	:	Q-SAA
Total pages	:	27 pages
Standards	:	AS/NZS 3112:2025
Date of Receipt sample	:	2026-08-18
Date of Test	:	2026-08-18 to 2026-09-15
Date of Issue	:	2026-09-20
Test Result	:	The submitted samples comply with the above standards

Remarks:
The results shown in this test report refer only to the sample(s) tested, this test report cannot be reproduced, except in full, without prior written permission of the company. The report would be invalid without specific stamp of test institute and the signatures of compiler and approver.

Prepared By:
Waltek Testing Group Co., Ltd.
Address: No. 77, Houjie Section, Guantai Road, Houjie Town, Dongguan City, Guangdong, China
Tel :+86-769-22676998
Fax:+86-769-22676828

Compiled by:

Dave Feng

Dave Feng / Project Engineer

Approved by:

Sam Qi / Designated Reviewer

WALTEK TESTING GROUP CO., LTD. WALTEK TEST REPORT

Test item description .....:	ITE/ICT Power Supply
Trademark .....:	GlobTek, Inc.
Model and/or type reference .....:	Q-SAA
Serial number .....:	N/A
Rating(s).....:	N/A

General product information:

1. The Q-SAA type is a detachable AS plug for the power adapter
2. Australian standard plug provided in the equipment has been tested according to AS/NZS 3112:2025
3. The plugs for other countries shall be evaluated when submitted to national approval.
4. For models with detachable plug, the plugs are fixed with enclosure by mechanical method that effectively prevents any disintegration or conductive parts remaining in the socket.
5. This report uses an AS plug of model Q-SAA and a power module of model GTM96060-0606-1.0 to test on behalf of other models
6. The power module equipped with the plug has the same electrical, mechanical and physical results except for the output voltage and load power.
7. Product covered by this report only is plug portion part of power supply

Difference between models:

GT*41134*****, GT*96060*****

The 1st “*” part can be ‘M’ or ‘-’ or ‘H’ for market identification and not related to safety.
The 2nd “*” part can be “-” or “CC”,"-" = Constant Voltage Model, CC =Constant Current Model.
The 3rd “*” denotes the rated output wattage designation, which can be “01” to “07”, with interval of 1.
The 4th “*” denotes the standard rated output voltage designation, which can be “03”, “03.3” ,“04”, “06”, “12”, “15”, “18”, “24”, or “36”.
The 5th “*”is optional deviation, subtracted from standard output voltage, which can be “-0.1” to “-11.9” with interval of 0.1, or blank to indicate no voltage different.
The 4th “*” and 5th “*” together denote the output voltage, with a range of 3.3-36 volts.
The last * denote any six character = 0-9 or A-Z or ()[] or – or blank for marketing purposes.

Summary of testing:

The samples are tested in accordance with AS/NZS 3112:2025
Part 1: Additional requirement according to Appendix J of AS/NZS 3112:2025 (Page 3-24);
Part 2: Photo documentation (Page 25-27).

Appendix J of AS/NZS 3112:2025			
Clause	Requirement - Test	Result - Remark	Verdict

Appendix J of AS/NZS 3112:2025

J1	**Scope**		**P**
J2	**Definitions**		**P**
J2.1	Detachable plug portion		P
	(a)Type A (see Figure J1)		N/A
	(b)Type B (see Figure J2)		P
	(c)Type C (see Figure J3)		N/A
J2.2	Integral plug portion		N/A
	A plug portion that is integral to the equipment enclosure and is not detachable.		N/A
J2.3	Plug portion		P
	A plug portion is that portion of equipment with pins for insertion into a socket-outlet, including the plug pins, terminals of the plug pins, external dimensions of the 'maximum projection' and any connections of a detachable plug portion.		P
J3	**Requirements for plug portion**		**P**
J3.1	General		P
	The following provisions apply to the dimensions apply to the dimensional and constructional requirements of the plug portion of equipment	See appendix 1	P
	and any detachable connection for (a) to (d).		N/A
	(a) For detachable plug portions intended for connection to the equipment in multiple orientations, the relevant tests are performed in the most onerous orientation.		N/A
	(b) For Type A detachable plug portion, the relevant requirements of AS/NZS 3105 are applicable, in addition to conformance with relevant clauses of this Appendix.		N/A
	(c) For Type B detachable plug portions, the conformance is shown by the relevant clauses of this Appendix.		P
	(d) For Type C detachable plug portions, conformance is shown by assessment to Section 2 of this Standard (plugs) and relevant clauses of this Appendix.		N/A
J3.2	Plug pin of plug portions:	See below	P
	The requirements of clause 2.2 are applicable for plug pins.	See cl. 2.2	P

Appendix J of AS/NZS 3112:2025			
Clause	Requirement - Test	Result - Remark	Verdict
Clause 2.2 Clause 2.2.1	Material for pins: Current carrying parts of plug pins shall be of metal having, under the conditions occurring in the plug, sufficient mechanical strength, electrical conductivity and resistance to corrosion adequate for their intended use. Compliances shall be check by inspection and where in doubt, by chemical analysis.	See below	P
	a) copper;		N/A
	b) copper alloy containing at least 58% copper for parts made from cold rolled sheet or at least 50% copper for other parts; or	≥58% copper	P
	c) stainless steel containing at least 13% chromium and not more than 0.09% carbon.		N/A
Clause 2.2.2	Assembly of pins: Where, during assembly, pin may become detached from the body of a plug yet remain attached to the conductors of a flexible cord, or have to be detached from the body to enable connection, it shall not be possible for a plus to be assembled with any pin located in a position other than that intended. In a plug made of resilient insulating material, the pins and terminals shall be held securely in position.	Moulded on the plug portion	P
Clause 2.2.3	Form of pin: The plug pins shall be adequately proportioned throughout and the portion adjacent to the connection shall be designed so as not to introduce a stress concentration which may lead to a fracture of the pin, and shall be suitably shaped to prevent abrasion or cutting of conductor strands due to flexure in normal use.	It can easily enter into the gauge without additional force applied. No sharp edges	P
	The exposed ends of plug pins shall have a bevel or radius to facilitate entry into socket-outlets and to operate shutters.	See below	P
	Round pins shall have a semicircular end profile.		P
	Flat pins with the following width and thickness profiles are deemed to comply:	See below	P
	a) Flat-pins with a radius on the end with side bevels, as shown in figure 2.1(h), may have a -	See appendix 1	P
	- i) width profile with an arc on the centre line of the pin of -	See appendix 1	P
	A) 6 mm for all pins of 10A plugs and live pins of 15A plug; or	See appendix 1	P
	B) 11 mm for each pins of 15A plugs and all pins of 20A plug; and	10 A plug	N/A

Appendix J of AS/NZS 3112:2025			
Clause	Requirement - Test	Result - Remark	Verdict
	- ii) thickness profile with each corner beveled 0.3 mm to 0.4 mm along the sides finishing along the pin at 0.8 mm to 1.0 mm.	See appendix 1	P
	b) Flat-pins square on the end with corner bevels and side bevels, as shown in figure 2.1(i), may have a -	Flat-pins with radius on the end with side bevels	N/A
	- i) width profile which is square and with each corner beveled 0.6 mm finishing along the pin at 0.8 mm to 1.0 mm; and		N/A
	- ii) thickness profile with each corner beveled 0.3 mm to 0.4 mm along the sides finishing along the pin at 0.8 mm to 1.0 mm.		N/A
	c) Flat-pins square on the end with corner bevels and a radius on the sides, as shown in figure 2.1(j), may have a -	Flat-pins with radius on the end with side bevels	N/A
	- i) width profile which is square and with each corner beveled 0.6 mm finishing along the pin at 0.8 mm to 1.0 mm; and		N/A
	- ii) thickness profile with a radius of approximately half the material thickness along the sides, finishing along the pin at 0.8 mm to 1.0 mm.		N/A
	The contact portion of the pin shall be smooth and free from openings or indentations; however, for flat pin plug, a longitudinal seam or opening in the contact portion of one face up to 0.3 mm width is deemed to comply. The thickness of any pin at the seam is measured using a 0.3 mm thick blade as indicated in Figure 2.3	Smooth, no seam	P
	The exposed portion of plug pins of other than insulated pin plug shall be free from any non-metallic coverings or coatings.		P
Clause 2.2.4	Insulation of plug pins: Live parts of insulated pin plugs shall not be exposed when the plug is partially or fully engaged with the associated socket	See below	P
	Compliance for plugs of the types shown in figure2.1 is checked by measurement to Figure 2.4	See appendix 1	P
	For purpose of this clause, lacquer, enamel or sprayed insulating coating is not considered to be insulation material.	No such materials used	P
	All live pins on low voltage plugs except for those shown in Figure 2.1(a2), (b) and (g) shall be of the insulated pin type from 5 years after the publication of this Standard.	Insulated pin sleeve used	P
J3.3	Rating and dimensions for low voltage plug portions:	See below	P

Appendix J of AS/NZS 3112:2025			
Clause	Requirement - Test	Result - Remark	Verdict
	The requirements of clause 2.8.1 and 2.8.4 are applicable for ratings and dimensions.	See cl. 2.8.1 and 2.8.4	P
Clause 2.8.1	Plugs with ratings up to and including 20 A, shall conform to the appropriate dimensions shown in Figure 2.1.	Two-pin plug. Complying with Figure 2.1(c), (e)	P
	In addition to dimensions of Figure 2.1, the distance between a live part pin of any plug and the edge of the moulding of the plug, shall be not less than 9 mm. Where doubt exists regarding compliance with this requirement, the gauge of Figure A1 in Appendix A or Figure B1 in Appendix B, or Figure F1(a) or Figure F1(b) in Appendix F, as appropriate, shall be place over the pin so as to contact the highest points associated with the plug face between the plug and the plug gauge, penetration to within 9 mm of the live pin shall not be possible.	The distance between a live part pin of any plug and its edge: Min.10.36mm (required: >9 mm)	P
	No point on the front face of the plug shall protrude by more than 0.5 mm. The pin lengths shall be measured from a plane normal to the pin passing through the highest point on the front face of the plug, to the end of the pin.	No point on the front face of the plug with protrusion	P
Clause 2.8.4	Compliance with dimensional requirements of Figure 2.1	See appendix 1	P
	Low voltage plug shall be checked for compliance with the prescribed dimensions of Figure 2.1 by any suitable means, except that compliance with the nominal dimensions covering disposition of pins, i.e. spacing from centre and angular orientation, shall be checked by a gauge complying with Appendix A, Appendix B or Appendix F, as appropriate.	See appendix 1	P
	In addition, low voltage flat-pin, or combination of flat and round pin, plug having ratings up to 15A of the Figure 2.1(a1), Figure 2.1(c), Figure 2.1(d), Figure 2.1(f) or Figure 2.1(g) type, shall comply with the dimensional requirements of Figure 2.1(e1 and e2).	Two-pin plug. Complying with Figure 2.1(c), (e). See appendix 1	P
	20 A plugs of the Figure 2.1(a2) type shall comply with the dimensional requirements of Figure 2.1(e2).		N/A
	Plugs with insulated pins, complying with this Standard, need not comply with dimension R20 ±1.0 mm of Figure 2.1(e2) provided there is at least 9mm from the edge of the live pins to the edge of the plug face Figure 2.1(e3).	Insulated pins used	P

J3.4	Internal connections for plug portions:	See below	N/A

Appendix J of AS/NZS 3112:2025			
Clause	Requirement - Test	Result - Remark	Verdict
	Internal connections for plug portions: The requirements of Clause 2.9 are applicable for internal connections unless requirements are contained in the relevant product standard.	See cl. 2.9	N/A
Clause 2.9	Internal connections	See below	N/A
	The design and construction of a plug provided with earthing connections shall be such that when the plug is correctly wired and completely assembled:	Two-pin plug	N/A
	a) a loose terminal screw or conductive material cannot bridge and live parts or earthing parts;		N/A
	b) the earthing parts are effectively isolated from contact with a live conductor which may become detached ; and		N/A
	c) the live parts are effectively isolated from contact with any earthing conductor which may become detached		N/A
	Any connections for auxiliary devices, such as radio interference suppressors or visual indicators, shall comply with the above requirements.	Compliance shall be checked by end-product standard	N/A
J3.5	Arrangement of earthing connections for plug portions	Two-pin plug	N/A
	The requirement of Clause 2.10 are applicable for arrangement of earthing connections.		N/A
Clause 2.10	The earthing pin of any low voltage, three-pin plug shall be that pin which is radial to the circle embracing the pins (see Figure 2.1(a), Figure 2.1(f), Figure 2.1(g)).	Two-pin plug	N/A
J3.6	Configuration of plug portions	See below	P
	The requirement of Clause 2.12.6 are applicable for configuration of plug portions	See cl. 2.12.6	P
Clause 2.12.6	A plug conforming to Figure 2.1(a), Figure 2.1(c), Figure 2.1(f) or Figure 2.1(g) shall have its pins disposed as that, when the pins are correctly connected, the pin configuration, viewed as from the pins, shall be earth, neutral and active in a clockwise direction.	Conforming to figure 2.1(c)	P
	Where there is no earthing, the live part pins shall conform to this configuration	Two-pin plug	P
J4	**Test**		**P**
J4.1	General		P

Appendix J of AS/NZS 3112:2025			
Clause	Requirement - Test	Result - Remark	Verdict
	Plug portions of equipment with integral pin shall be subjected to the following tests and unless stated otherwise, shall comply with the requirement specified in section 2 for each test. The number of test samples shall be in accordance with table J1	The number of test samples used in accordance with table J1	N/A
	For equipment with a detachable plug portion, the assessment of Table J1 tests 2, 3, 5, 10 and 11 shall be conducted on the-		P
	(a) assembled equipment with the detachable plug portion connected; and		P
	(b) the detachable plug portion after it has been separated from the equipment.		P
	Table J1: **Table J1 — Integral or detachable plug portions—Tests to be applied and order of application** 1 / 2 / 3 / 4 Test No. / Description of test / Reference for test procedure and criteria* / Sample identification General and dimensions / J3 / A 1 / High voltage test / J4.2 / A 2 / Tumbling barrel test / J4.3.1 / BCD† 3 / Impact test / J4.3.2 / BCD† 4 / Pin bending test / J4.3.4 / EFG 5 / Plug portion detachment requirements / J4.8.3 / H† 6 / Temperature rise test / J4.4 / H 7 / Securement of pins / J4.5 / H 8 / Tests for plugs with insulated pins / J4.6 / H 9 / Equipment with a plug portion intended to be supported by the contacts of a socket-outlet / J4.7 / H 10 / Access to live parts / J4.8.1 / H† 11 / Construction of detachable contacts / J4.8.2 / H† 12 / Resistance to heat / J4.8.4.1 / any or J‡ 13 / Determination of ignitability and combustion propagation / J4.8.4.2 / any or J‡ NOTE Total number of samples required: 10 samples (A, B, C, D, E, F, G, H, I, J). * Clause numbers refer to this Standard. † For detachable plug portions, additional samples are required to repeat the tests in both methods as described in Clause 4.1 (at least 3 additional samples). Should the product utilize multiple plug portions, then the test is repeated with each plug portion fitted (number of additional samples is determined by the number of plug portions). ‡ Resistance to fire test may require a further sample in new and clean condition.		P
J4.2	High voltage test	See below	P
	The requirement of clause 2.13.3 are applicable unless requirements are contained in the relevant product standard.	See cl. 2.13.3	P
Clause 2.13.3	High voltage test		P
	The plug shall withstand without failure an a.c voltage of the value indicated in table 2.3, applied between the parts set out in item (a) and (c) of clause 2.13.2 for 1 min. in each case		P
	a) Between all poles of the plug, taken in pairs.	Applied 1000V a.c.	P
	c) Between live poles of plug and the earthing terminal of exposed metal, the live poles being connected together.		N/A
	The plug shall further withstand, without failure, a voltage of 3000 V a.c. applied between the parts set out in Items (b) and (d) of clause 2.13.2 for 1 min. in each case.	Applied 3000V a.c.	P

Appendix J of AS/NZS 3112:2025			
Clause	Requirement - Test	Result - Remark	Verdict
	b) Between live poles of plug and any external metal, all live poles of plug being connected together.		N/A
	d) Between live poles and a flexible electrode applied to non-conducting parts normally handled in service all live poles connected together.	Applied 3500V a.c. to live parts with metal foil wrapping over insulated mouldings.	P
	The insulation of insulated pin plugs shall withstand a voltage of 1250V a.c. for 1 min applied in accordance with Clause 2.13.2(e)	See below	P
	e) for insulated pin plug, between live poles and a metal foil applied around the insulation on each live pin for a distance of approximately 4 mm from plug face, all live poles being connected together.	Applied 1250V a.c. to live parts with metal foil wrapping over insulated pin	P
J4.3	Mechanical strength of pin test	See below	P
J4.3.1	Tumbling barrel test	See below	P
	The tumbling test is applied to determine the mechanical strength of the plug pins		P
	For equipment with a detachable plug portion, the detachable plug portion may become detached during the test. If this occurs the detachable plug portion shall be reassembled with the equipment when the pins are straightened as per (a) and (b) below:		P
	Three sample which have not been subjected to any previous test are tested to the requirements of clause 2.13.7.1 however, the test is modified for plug portion of equipment with integral pin as follows:	Tested according to cl. 2.13.7.1	P
	A sample of equipment with integral pins is dropped-	See below	P
	a) 500 times if the mass of the specimen does not exceed 250g. The pins being straightened after 100 drops and at the completion of the test to pass through the appropriate gauge of Figure A1, B1 or F1; and	Weight: 123g 500 times of falls were conducted Three samples tested. Not damaged. At the completion of the test it can pass through the gauge of Figure A1, B1 or F1, as appropriate.	P
	b) 250 times if the mass of the specimen exceed 250g. The pins being straightened after 25 drops and at the completion of the test to pass through the appropriate gauge of Figure A1, B1 or F1; and		N/A
	Compliance shall be checked in accordance with Paragraph J4.3.3	See J4.3.3	P
J4.3.2	Impact test	See below	P

Appendix J of AS/NZS 3112:2025			
Clause	Requirement - Test	Result - Remark	Verdict
	Plug portions and equipment having integral plug portions or detachable plug portions shall withstand lateral impact forces.		P
	All samples that were subjected to the tests in Paragraph J4.3.1 shall be tested as followings:		P
	(a) The sample shall be positioned at the centre of a steel plate with a thickness of at least 6mm. Apertures in the steel plate for the plug pins to pass through shall conform to the corresponding socket Standard. The sample shall be held against the steel plate by clamping all the pins.		P
	(b) Samples shall be subjected to blows, with an impact energy of 1.0±0.05J by any means having the same performance as the spring-operated impact-test apparatus of AS/NZS 3100.		P
	(c) Three blows shall be applied to every point that is most likely to directly or indirectly stress the enclosure joints of the sample.		P
	Compliance shall be checked by Paragraph J4.3.3.		P
J4.3.3	Specific compliance certeria		P
	For equipment with an intergral plug portion, the assessment shall be made on the complete equipment.		N/A
	For equipment with a detachable plug portion, the assessment shall be conducted on the -	detachable plug.	P
	(a) assembled equipment with the detachable plug portion connected; and		P
	(b) the detachable plug portion after it has been separated from the equipment.		P
	Following each test the samples shall comply with Clause 2.13.7.1	See below	P
	(a) Live parts shall not have become exposed to the standard test finger.	Live parts are not exposed	P
	(b) For earth pins, the resistance of the plug/socket-outlet circuit shall be such that conformance with Clause 3.14.7 is maintained.	Not applied, no earth pin.	N/A
	(c) Any other function affecting safety shall not be impaired.	All functions can be worked normally.	P
	(d) No live part shall have become detached or loosened, to the extent that a hazardous situation is created (see Clause 2.9).	No detached or loosened	P

Appendix J of AS/NZS 3112:2025			
Clause	Requirement - Test	Result - Remark	Verdict
	(e) The pins shall be inspected with normal, or corrected to normal, vision. Insulation may be removed if necessary. Pins shall not be broken or show cracking	Pins are not broken	P
	The sample shall conform to the “Guarding of live parts” requirements of AS/NZS 3100.		P
	Following each test, no internal conductive material or conductive part shall have become detached or loosened, to the extent that it creates a hazardous situation. The sample shall conform to the “Separation of live parts from non-carrying conductive parts” requirements of AS/NZS 3100.		P
J4.3.4	Pin bending test	See below	P
	The pin of the plug portion of three samples not subjected to any previous tests shall be tested for compliance with the pin bending test of Clause 2.13.7.2	Tested according to cl. 2.13.7.2.	P
Clause 2.13.7.2	All flat-pins of plugs rated up to and including 15A shall be subjected to a pin bending test. Three samples not subject to any previous tests shall be test as following:	New three samples	P
	Pin of assembled plug shall be tested by clamping the plug in a rigid holding block and applying a bending force, as shown in figure 2.8, to the pin under test.		--
	The pin shall be straight at the beginning of the test. If there is any doubt about the straightness of the pin, it shall be checked by the appropriate plug gauge shown in Appendices A, B or F.	Checked with the appropriate plug gauge before conducting test	--
	The portion of application of the force shall be 14±0.5mm from the face of the plug.	The force applied on 14 ± 0.5 mm from the face of the plug	--
	The direction of the force shall be along a line parallel to the face of the plug.	The direction of the force applied along a line parallel to the face of the plug	--
	Active and neutral pins shall be forced towards the centroid of the plug and then back to the starting point. On the first sample plug, any earth pin shall be forced but in one direction only and then back to the starting point. On the second sample plug, any earth pin shall be forced in the opposite direction to that used for testing the first sample plug. On the third sample plug, any earth pin shall be force in the direction that gave the least favourable result during testing of the first two sample plugs.	Tested according to the procedure	--
	The distance moved from the point of application shall be 7.45±0.5mm, and then the pin shall be forced back to the starting point. Any “spring-back” is ignored.	The distance moved from the point of application was 7.45 ± 0.5 mm	--

Appendix J of AS/NZS 3112:2025			
Clause	Requirement - Test	Result - Remark	Verdict
	The travel from the starting point, to the end point (7.45 mm), and back to the starting point is one cycle. (i.e. one cycle is two separate movements)		--
	The speed of deflection shall be maximum of 50 mm/s.	50 mm/s of the speed of deflection	--
	The interval between successive cycles shall be a minimum of 10 s.	10s of the interval	--
	The pins shall be tested for 20 movement cycles.	20 movement cycles	P
	After the tests the pins shall be inspected with normal or corrected to normal vision.		P
	The pin shall not be broken off.	No pins broken off	P
	If in doubt pins shall be disassembled from the plug and any insulation removed.		N/A
J4.4	Temperature rise test	See below	P
	The relevant requirements of clause 2.13.8 are applicable for the temperature rise test, except that the test current shall be that specified in the relevant product standard.	See cl. 2.13.8	P
	The temperature rise of the pins shall not exceed 45K irrespective of the temperature rise of parts specified in end product standards.	See appended table	P
Clause 2.13.8	Plug shall be so constructed that they comply with the following temperature rise test:		P
	a) Non-rewireable plugs are tested as delivered. (specially prepared sample with access to terminals for temperature measurement)	Non-rewireable plug	P
	b) Rewireable plugs are fitted with polyvinyl chloride flexible cord with conductors having the minimum cross-sectional area specified in the manufacturers instructions.	rewireable plug	N/A
	The terminal screws or nuts are tightened with a torque to two-thirds of that specified in test No. 5	No terminal screws or nuts used	N/A
	To ensure normal cooling of the terminals, the conductors connected to plugs shall have a length of at least 1 m.	See above	N/A
	The plug shall be tested in a draught-free environment at the centre of a plane wooden board, which shall be at least 6 + 2 mm thick, 500 mm wide and 500 mm long with the rear completely enclosed in a wooden mounting enclosure (wall box) of 90 × 60 × 40 mm.		P
	Apertures in the wooden board for the plug pins to pass through are specified in Table 3.1, see Figure 2.9.		P
	Plugs are tested as follows:		P

Appendix J of AS/NZS 3112:2025			
Clause	Requirement - Test	Result - Remark	Verdict
	The appropriate clamping units with the dimensions specified in Figure 2.10 are fitted on each live pin of the plug, together with the thermocouple.		P
	The screw is then placed approximately in the middle of the bare part of the pin and tightened with a torque of 0.8 Nm. The clamping unit is fitted with PVC-insulated conductors at least 1 m long, having nominal cross-sectional areas as shown in Table 3.3.		P
	Where the conductors pass through the wooden mounting enclosure (wall box) there shall be a complete airtight seal between the conductors and the enclosure.		P
	The plug is inserted into the socket outlet and an alternating current of 1.1 times rated current is passed for 1 h.	240 V+10 %	P
	The temperature of the flexible cord terminal is determined by means of melting particles, colour changing indicators or thermocouples, so chosen and positioned that have negligible effect on the temperature being determined.	J type thermocouple used	P
	Temperature rise of the terminals shall not exceed 45K	See appended table	P

Measurement location	**Temperature rise in K**	**Maximum allow. temp. rise in K**	**P**
Termination L of plug	19.2	45	P
Termination N of plug	16.8	45	P
Enclosure inside	12.0	45	P
Enclosure outside	8.6	45	P
Ambient	24.2℃	--	
Notes: Measurement uncertainties were adjudged to be ± 2 °C			

2.13.7.1	J 4.3.1Tumbling barrel test		P
Requirement	Test result		
	Sample 1	Sample 2	Sample 3
After 1000 times of falls, the sample shall show no damage within the meaning of this standard:	--	--	--
(a) Live parts shall not have become exposed to the standard test finger.	OK	OK	OK
(b) For earthing pin, the resistance of the plug/socket-outlet circuit shall be such that compliance with Clause 3.14.7 is maintained.	N/A	N/A	N/A
(c) Any other function affecting safety shall not be impaired.	OK	OK	OK
(d) No live part shall have become detached or loosened, to the extent that a hazardous situation is created.	OK	OK	OK

Appendix J of AS/NZS 3112:2025			
Clause	Requirement - Test	Result - Remark	Verdict
(e) The pins shall be inspected with normal, or corrected to normal, vision. Insulation may be removed if necessary. Pins shall not be broken or show cracking.	OK	OK	OK
J4.5	Securement of pin of the plug portion	See below	P
	The requirements of clause 2.13.9 are applicable for the securement of pins	See cl. 2.13.9	P
Clause 2.13.9	Securement of pins	See cl. 2.13.9.1 and 2.13.9.2	P
Clause 2.13.9.1	Movement of pins	See below test result	P
	Plug shall be tested for pin movement by clamping the pin or pins not under test in a rigid holding block positioned 5±0.5mm from the plug face and applying a force of 18±1N to the pin under test. The design of the block shall be such that the pin under test shall not come into contact with the block during the test.	A force of 18 ± 1 N applied	P
	Except for non-rewireable plugs, the test shall be carried out without a cord attached to the plug, and with the terminal screws loosened sufficiently to allow a 1mm^2 conductor to be connected.	Non-rewireable plug	N/A
	The plug and test equipment shall be preconditioned at a temperature of 40±1°C for 1 h, without the test force applied. Throughout the test, all parts of the plug test equipment shall be maintained at this temperature.	Preconditioned at a temperature of 40 ± 1 °C for 1h	P
	For all plugs, the point of application of the force shall be 14 ± 0.5 mm from the face of the plug along the pins, and the direction of the force shall be	Complied	--
	a) in both direction along the line perpendicular to the plane of the pin, and passing through the centre of the pin; and	Both directions tested	P
	b) in that plane in both directions along a line at right angle to that specified in item (a)	Both directions tested	P
	Over a period of 10 s, the force shall be gradually applied to each of the pins in the manner prescribed in item (a) and (b), maintained at its maximum value for 10 s, and then released. The deflection of the pins shall be measured along the line of force relative to the face of the rigid holding block during the period when the force is applied. The maximum deflection shall not exceed 2.0 mm.	Measured: 0.2 mm max. (all source of material were considered)	P

Appendix J of AS/NZS 3112:2025			
Clause	Requirement - Test	Result - Remark	Verdict
	Following the test on all pins of a plug conforming to Figure 2.1, any distortion 5 min. after the completion of the test on the last pin shall be such that it will not prevent the plug from being inserted in the appropriate standard gauges shown in Appendix A, Appendix B and Appendix F without the application of undue force,	After test it can still be inserted in the standard gauge shown in Appendix A, Appendix B or Appendix F, as appropriate, without the application of undue force	P
	For other types of plug, any distortion after 5 min shall be such as will not prevent the plug being inserted into an appropriate socket-outlet without the application of undue force.	All pins of plug confirming to figure 2.1	P
Clause 2.13.9.2	Fixing of pins	See below for test result	P
	A separate sample of a plug, shall be heated to a temperature of 50±2°C for 1 h and maintained at that temperature during the whole of these tests, including the 5 min. period after removal of the test load.	Heated to a temperature of 50 ± 2 °C for 1h	P
	The plug shall be held firmly in such a manner that there will be no undue squeezing or distortion of the body, and the means of holding shall not assist in maintaining the pins in their original position.	Firmly held without applying undue squeezing or distortion to the body	P
	Each pin, in turn, shall have applied to it a force which, over a period of 10 s, shall be increased steadily to 60±0.6N and held at this value for 10 min.	A force of 60 ± 0.6 N applied	P
	Two test on each pin shall be conducted, one with the direction of force along the length of the pin toward the body of the plug, and the other with the direction of force along the length of the pin away from the body.	Two tests on each pin were conducted	P
	The attachment of pins shall be considered inadequate if any pin is displaced relative to the adjacent material of the body by more than 2.4 mm at any time during these tests, or id any pin fails to return to within 0.8mm of its nominal length specified in Figure 2.1 within 5 min. of the removal of the test force.	No displacements on any pins of plug were observed	P
J4.6	Tests on the insulation material of insulated pin plug portions.	See below	P
	The requirements of clause 2.13.13 are applicable for insulating material of insulated plug pins.	See cl. 2.13.13	P
Clause 2.13.13	Additional test for plug with insulation pins	See below	P
Clause 2.13.13.1	General		

Appendix J of AS/NZS 3112:2025			
Clause	Requirement - Test	Result - Remark	Verdict
	The material of the pin-insulation shall be resistant to the stresses to which it may be subjected at the high temperature likely to occur in conditions approaching the bad connection conditions and at low temperature in particular conditions of service.	See below	P
	Compliance shall be checked by the test of Clause 2.13.13.2 to 2.13.13.6	See cl. 2.13.13.2 to 2.13.13.6	P
Clause 2.13.13.2	Pressure test at high temperature	See below	P
	A specimen of one insulated pin only shall be subjected to the following test by means of the apparatus shown in Figure 2.5. This apparatus shall have a round shape with a distance of 6 mm and a thickness of 0.7 mm.	Tested by using of test equipment shown in Figure 2.5	P
	The specimens shall be placed in position as shown in the Figure 2.5 and a force of 2.5N shall be applied through the blade to the specimen.	A force of 2.5 N applied	P
	The apparatus, which the specimen in position, shall be maintained for 2 h in a heating cabinet at a temperature of 160± 5°C. The specimen shall then be removal from the apparatus and, within 10 s, cooled by immersion in cold water.	Tested in a heating cabinet at a temperature of 160 ± 5 °C for 2 h	P
	The thickness of the insulation shall be measured immediately at the point of impression. The thickness within the area of the impression shall not less than 50% of the thickness measured before the test.	After the test, the thickness of sleeve of plug pins (line and neutral pins) remaining at the impression point were reduced approximately 18% that not more than 50 %	P
	Visual inspection shall be made and no cracks on the insulation material shall be visible with normal, or corrected to normal, vision without additional magnification, and the dimension of the insulating material shall not have changed below the minimum size shown in Figure 2.4	Compliance checked	P
Clause 2.13.13.3	Static damp heat test	See below	P
	An insulated pin plug shall be subjected to two damp heat cycles in accordance with IEC60068-2-30. Db (12+12 h cycle), 95% relative humidity, lower temperature 25±3°C and upper temperature 40°C	Tested in accordance with IEC 60068-2-30	P
	After this treatment and after recovery to room temperature, the specimen shall subjected to:	See below	P
	a) the insulation resistance test in accordance with Clause 2.13.2(e)	5MΩ	P
	b) high voltage test in accordance with Clause 2.13.3 and;	See cl. 2.13.3	P

Appendix J of AS/NZS 3112:2025			
Clause	Requirement - Test	Result - Remark	Verdict
	c) abrasion test in accordance with Clause 2.13.13.6	See 2.13.13.6	P
Clause 2.13.13.4	Low temperature test	See below	P
	An insulated pin plug shall be maintained at -15±2°C for at least 24 h and returned to room temperature.	Maintained at -15 ± 2 °C for 24 h	P
	a) the insulation resistance test in accordance with Clause 2.13.2 (e)	5MΩ	P
	b) high voltage test in accordance with Clause 2.13.3 and;	See cl. 2.13.3	P
	c) abrasion test in accordance with Clause 2.13.13.6	See cl. 2.13.6	P
Clause 2.13.13.5	Impact test at low temperature	See below	P
	A specimen of one insulated pin only shall be subjected to an impact test by means of the apparatus shown in Figure 2.6. The mass of the falling weight shall be 100±1 g,	See below	P
	The apparatus, on a sponge rubber pad 40 mm thick, together with the specimen, shall be maintained at -15±2°C for at least 24 h.	Maintained -15 ± 2 °C for at least 24 hrs	P
	At the end of this period, the specimen shall be placed in position, as shown in Figure 2.6, and the falling weight shall be allowed to fall from a height of 100 mm. Four impacts shall be applied successively to the same specimen, rotating it through 90° between impacts.	Tested by using test equipment shown in Figure 2.6	P
	After the test the specimen shall be allowed to return to room temperature and then examined. No cracks of the insulating material shall be visible with normal, or corrected to normal, vision without additional magnification.	No cracks of the insulating material	P
Clause 2.13.13.6	Abrasion test	See below	P
	An insulated pin of an insulated pin plug shall be subjected to the following test by means of an apparatus as shown in Figure 2.7	See below	P
	The test apparatus comprises a horizontally disposed beam, which shall be pivoted about its center point. A short length of steel wire, 1 mm in diameter and bent into a U-shape, the base of U being straight, shall be rigidly attached, at both ends, to one end of the beam, so that the straight part project below the beam and shall be parallel to the axis of the beam pivot.		P

Appendix J of AS/NZS 3112:2025			
Clause	Requirement - Test	Result - Remark	Verdict
	The plug shall be held in a suitable clamp in such a position that the straight part of the steel wire rests on the major axis face of the plug pin, at right angles to it. The pin shall slope downwards at an angle of 10° to the horizontal.	Tested at a pin was sloped downwards at an angle of 10° to the horizontal	P
	The beam shall be loaded so that the wire exerts a force of 4 N on the pin	A force of 4N applied	P
	The plug shall be moved backwards and forwards in a horizontal direction in the plane of the axis of the beam, so that the wire rubs along the pin. The length of the pin thus abraded shall be approximately 9 mm, of which approximately 7 mm shall be over the insulation		P
	The number of movements shall be 20,000 (10,000 in each direction) and the rate of operation shall be 30 movements per min.	20000 of movements with the rate of 30 movements per min	P
	After the test, the pins shall show no damage which may affect safety or impair the further use of the plug, in particular, the insulating sleeve shall not have punctured or rucked up.	No rucked up or punctured of insulating sleeve observed	P
J4.7	Equipment with integral pins intended to be supported by the contacts of a socket-outlet	See below	P
	Unless requirements are contained in the relevant product standard, compliance is checked by inserting the equipment with integral pins, as in normal use, into a flash-mounting combination switch socket-outlet complying with this standard, the socket-outlet being pivoted about a horizontal axis through the centre-lines of the contact apertures at a additional torque, which has to applied to the socket-outlet to maintain the engagement face in the vertical plane, shall not exceed 0.25N.m.	Weight: 134g The maximum measured torque: 0.056 N.m	P
	Where the equipment with integral pins is fitted with a flexible cord, the test is conducted with the centre-line of the axis of pivot of the socket-outlet located at a point 500 mm above a horizontal surface. The flexible cord is allowed to hang freely from the equipment with that flexible cord in excess of 500 mm resting on the horizontal surface during the test.	Tested as delivered	P
J4.8	Additional requirements for detachable plug portions DOA 24/02/2019		P
J4.8.1	Access to live parts DOA 24/02/2019		P
	Detachable plug portion shall be not possible to contact live parts with the small test finger of Figure 13 of IEC 61032.		P

Appendix J of AS/NZS 3112:2025			
Clause	Requirement - Test	Result - Remark	Verdict
	If an opening does not allow entry of the test finger, a force on the test finger in the straight position is increased to 20 N.		N/A
J4.8.2	Construction of detachable contacts where the input current of the equipment exceeds 0.2 A DOA 24/02/2019		P
	Contacts of the equipment shall be such that they make and maintain, under normal service conditions, satisfactory electrical and mechanical contact with the corresponding contact of the detachable plug portion. The effectiveness of the contacts is checked by inspection and by the plug portion detachment requirements of Paragraph J4.8.3.		P
J4.8.3	Plug portion detachment requirements DOA 24/02/2019		P
	The plug portion and the equipment/adaptor shall be connected and disconnected 50 times (100 strokes).		P
	The plug portion shall be securely held in position. A force which, over a period of 10 s, shall be increased steadily to 60 ± 0.6 N and held at this value for a further 10 s, shall be applied evenly at the connecting equipment in a direction parallel to the pins. This procedure shall be conducted three times on the same plug portion, at intervals of 5 min, without disturbing the plug portions between tests. During the test period, the plug portion shall not separate from the equipment.		P
	The test of AS/NZS 3112 'temperature rise test' for plugs shall be conducted immediately after the above test without disturbing the sample.	Max:19.8K	P
J4.8.4	Single spring-assisted contact strength test		N/A
	The whole test arrangement shall be placed in a heating cabinet which is initially kept at a temperature of 20 °C ± 2 °C. The test shall be applied to all contact, including any earthing contact.		N/A
	The product shall be then subjected to 192 temperature cycles, each cycle having a duration of 60 min, as follows:		N/A
	(a) The rated current shall be applied for the initial 30 min of each cycle		N/A
	(b) The ambient temperature of the heating cabinet will vary throughout the 60min cycle, as follows:		N/A

Appendix J of AS/NZS 3112:2025			
Clause	Requirement - Test	Result - Remark	Verdict
	(i) 0 min to 20 min — The air temperature in the cabinet is raised to 40 °C or to the value of the T-marking.		N/A
	(ii) 20 min to 30 min — It is maintained within ± 5 °C of this temperature.		N/A
	(iii) 30 min to 50 min — The heating cabinet is then allowed to cool down to a temperature of approximately 30 °C, forced cooling being allowed.		N/A
	(iv) 50 min to 60 min — The temperature maintained at 30 °C ± 2 °C, if necessary, for measuring the voltage drop, the heating cabinet is allowed to cool down further to a temperature of 20 °C ± 2 °C.		N/A
	During the ageing test the voltage-drop measurement is made in the ambient cool condition to ensure stability.		N/A
	The voltage drop is measured after the completion of the 24th and 192nd cycles and recorded.		N/A
	The maximum allowable voltage drop of each clamping unit, measured with the rated current, shall not exceed the smaller of the two following values:		N/A
	(i) either 22.5 mV; or		N/A
	(ii) 1.5 times the value measured after the 24th cycle.		N/A
	The measuring points shall be as close as possible to the electrical contact between the plug portion and the equipment.		N/A
	The temperature in the heating cabinet shall be measured at a distance of at least 50 mm from the samples.		N/A
J4.8.5	Resistance of insulating material to heat and fire		P
J4.8.5.1	Resistance to heat		P
	Subjecting the relevant part to the ball pressure test of IEC 60695-10-2 as specified below. The test is carried out at a temperature of 40 ± 2°C plus the maximum temperature rise determined during the temperature test of Paragraph J4.4, but it shall be at least: (a)75 ± 2°C, for external parts; (b)125 ± 2°C, for parts supporting live parts. After the test, dimension d (diameter of the indentation) shall not exceed 2 mm.	Plug holder(b):1.2mm Enclosure(a):0.8mm	P
J4.8.5.2	Resistance to fire		P

Appendix J of AS/NZS 3112:2025			
Clause	Requirement - Test	Result - Remark	Verdict
	Plug portions shall comply with the requirements for resistance to fire in accordance with AS/NZS 3100. The glow-wire test temperature 'T' shall be 750°C.	750°C.	P
	Where a plug portion is detachable, conformance shall be established by assessment with the plug portion fully assembled with the equipment. Access to live parts shall be assessed for incorrect assembly of the plug portion. It shall not be possible to assemble the plug portion to the equipment resulting in a dangerous situation allowing access to live parts. The plug portion shall not expose live parts prior to assembly.		P

Appendix 1 10A Plug Portion Dimensions (Two-Pins)

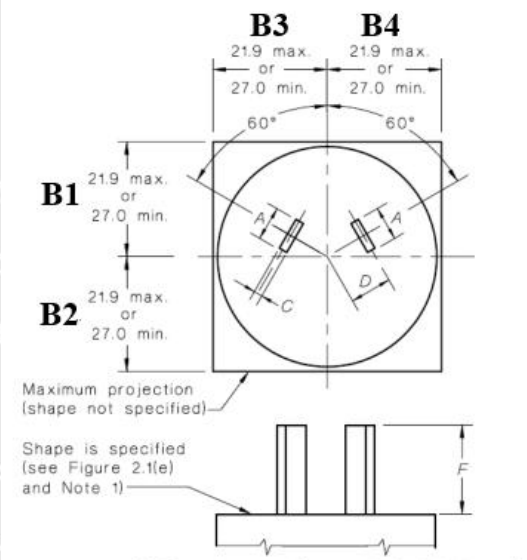

(c) Two-pin plugs (up to 10 A, 250 V max.)

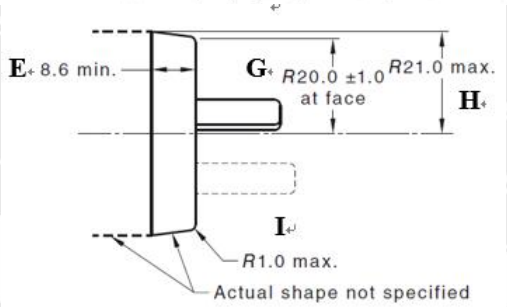

(e2) Shape of plugs having ratings up to 20 A, 250 Vmax. and of the (a1), (a2), (c), (d), (f) or (g) type.

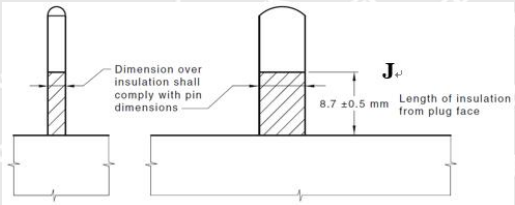

FIGURE 2.4 DIMENSIONS OF INSULATION ON INSULATED LIVE PINS

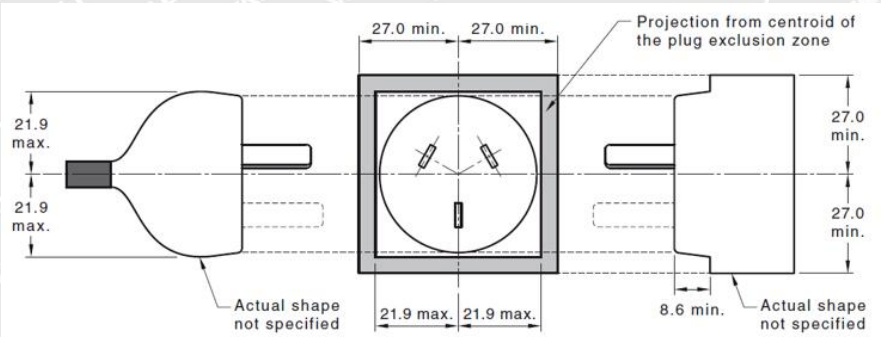

(e1) Shape of projection from taceplate centroid

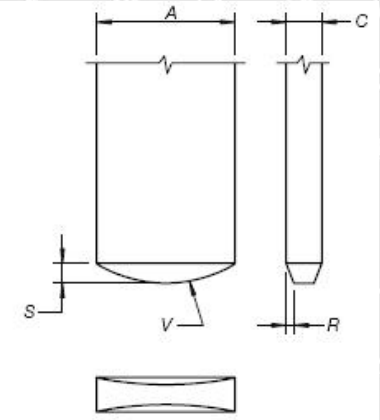

(h) Flat pin with radius
on the end with side bevels

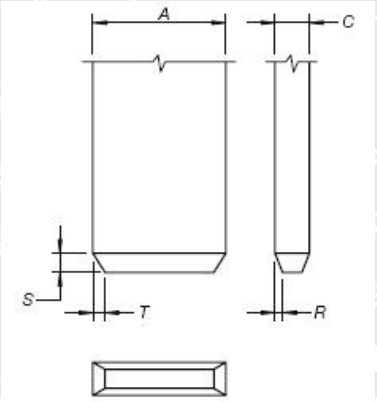

(i) Flat pin square on the end
with corner bevels and side bevels

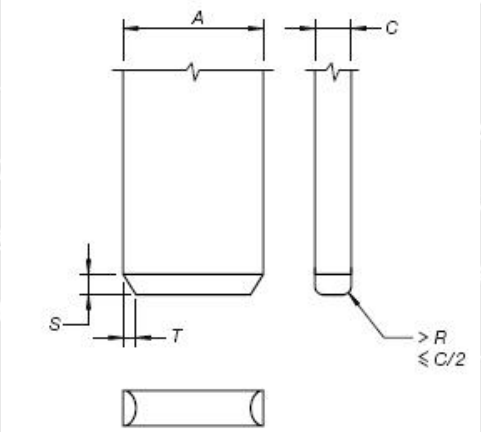

(j) The flat pin square on the end
with corner bevels and radius on the sides

Linear Dimensions (mm)	Measurement (mm)		Limit (mm)	Verdict
	Metal	Insulation		
A (Left side)	6.36	6.48	6.2 – 6.5	P
A (Right side)	6.35	6.48	6.2 – 6.5	P
B1 (top side)	19.4	19.4	≥27.0 or ≤21.9	P
B2 ((bottom side)	61.65	61.65	≥27.0 or ≤21.9	P
B3(left side)	20.20	20.20	≥27.0 or ≤21.9	P
B4 (right side)	20.20	20.20	≥27.0 or ≤21.9	P
C (Left side)	1.74	1.66	1.58 – 1.78	P
C (Right side)	1.73	1.65		P
D (Left side)	Fit the testing gauge	Fit the testing gauge	7.92 (Nominal) 1)	P
D (Right side)	Fit the testing gauge	Fit the testing gauge		P
E	11.00	11.00	8.6 min.	P
F (Left side)	16.95	16.95	16.66 – 17.46	P
F (Right side)	17.04	17.04	16.66 – 17.46	P
G	19.27	19.27	R19.0 – R21.0	P
H	19.36	19.36	R21.0 max.	P
I	P	P	R1.0 max.	P
J	L:8.60,R:8.58	L:8.60,R:8.58	8.2 – 9.2	P
R	P	P	0.30 – 0.40	P
S	0.85	0.85	0.80 – 1.00	P
T	--	--	0.60 min.	N/A
V	Fit the testing gauge	Fit the testing gauge	6 1)	P
Distance from projection part edge to L and N pins	L:10.45,R:10.45	L:10.45,R:10.45	9 min.	P
Pin Angle (Left side)	Fit the testing gauge	Fit the testing gauge	60° 1)	P
Pin Angle (Right side)	Fit the testing gauge	Fit the testing gauge	60° 1)	P

1) Dimensions without tolerances are nominal. Samples are to be checked with the gauge specified in Appendix A, Appendix B or Appendix F, as appropriate.
2) The dimension G is not applicable if the plug pins are insulated pin type.

Photo 1 External View

Photo 2 External View

Photo 3 External View

Photo 4 External View

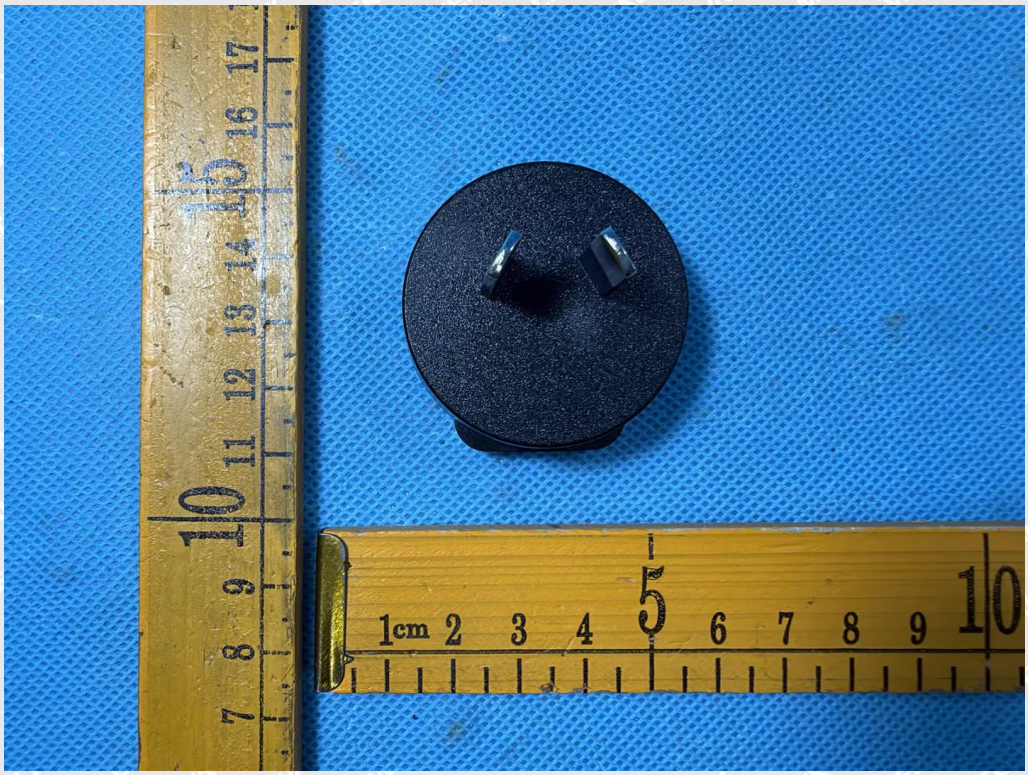

Photo 5 External View

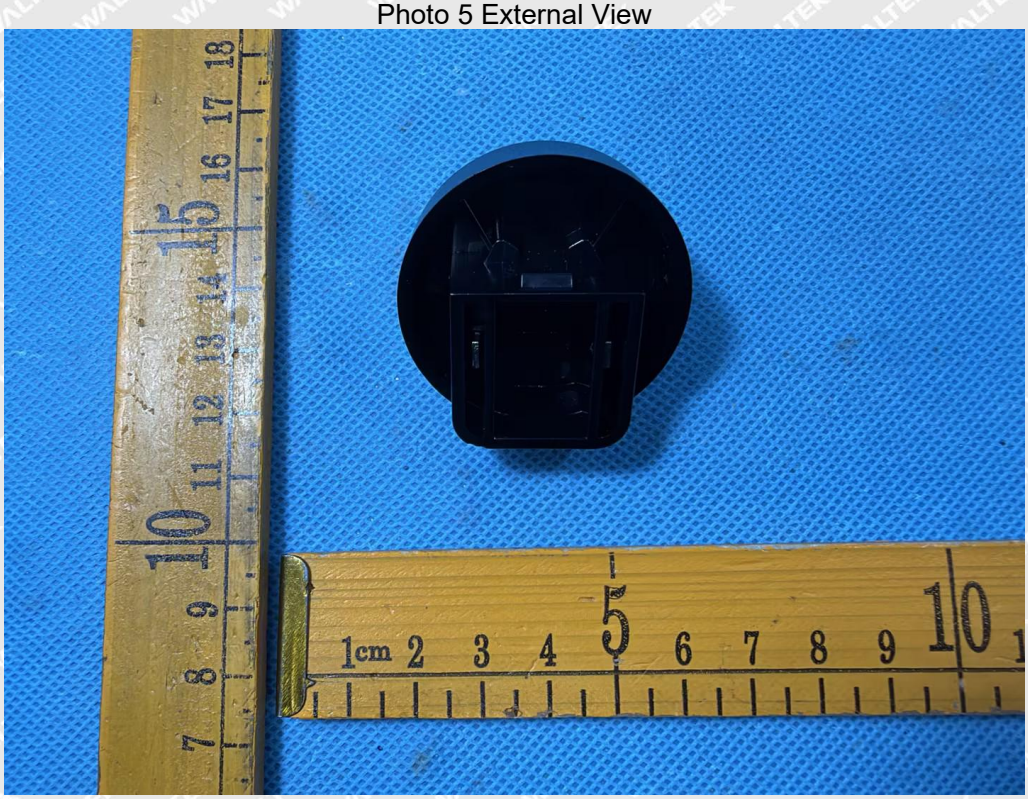

Photo 6 External View

======End of Report======