Test Report issued under the responsibility of:

TEST REPORT
IEC 60601-1
Part 1: General requirements for basic safety and essential performance

Report Number. ..... :	160100305SHA-001
Date of issue..... :	2016-08-01
Total number of pages	204
Name of Testing Laboratory preparing the Report ..... :	Intertek Testing Services Shanghai Limited
Applicant's name..... :	GlobTek, Inc.
Address..... :	186 Veterans Dr. Northvale, NJ 07647 USA
Test specification:	
Standard..... :	IEC 60601-1:2005 (Third Edition) + CORR. 1 (2006) + CORR. 2 (2007) + AM1 (2012) or IEC 60601-1 (2012 reprint)
Test procedure..... :	CB Scheme
Non-standard test method ..... :	N/A
Test Report Form No. ..... :	IEC60601_1J_PS
Test Report Form(s) Originator.... :	UL(US)
Master TRF..... :	2014-09

Copyright © 2014 IEC System of Conformity Assessment Schemes for Electrotechnical Equipment and Components (IECEE System). All rights reserved.

This publication may be reproduced in whole or in part for non-commercial purposes as long as the IECEE is acknowledged as copyright owner and source of the material. IECEE takes no responsibility for and will not assume liability for damages resulting from the reader's interpretation of the reproduced material due to its placement and context.

If this Test Report Form is used by non-IECEE members, the IECEE/IEC logo and the reference to the CB Scheme procedure shall be removed.

This report is not valid as a CB Test Report unless signed by an approved CB Testing Laboratory and appended to a CB Test Certificate issued by an NCB in accordance with IECEE 02.

General disclaimer:

The test results presented in this report relate only to the object tested.
This report shall not be reproduced, except in full, without the written approval of the Issuing CB Testing Laboratory. The authenticity of this Test Report and its contents can be verified by contacting the NCB, responsible for this Test Report.

Test item description ..... :	Medical Power Supply
Trade Mark ..... :	GlobTek
Manufacturer..... :	GlobTek, Inc. 186 Veterans Dr. Northvale, NJ 07647 USA
Model/Type reference ..... :	GT**-***** (See page 7 for details)
Ratings ..... :	Input: 100-240V~, 50-60Hz, 0.6A / 1.0A / 1.5A; Output: 5-48VDC, Max 36W

Testing procedure and testing location:		
☒ **CB Testing Laboratory:**	Intertek Testing Services Shanghai	
Testing location/ address ..... :	Building No.85 and 86, 1198 Qinzhou Road (North), 200233 Shanghai, China	
☐ **Associated CB Testing Laboratory:**		
Testing location/ address ..... :		
Tested by (name + signature)..... :	Larry Zhong (Engineer)	Larry Zhong
Approved by (name + signature)..... :	Justin Yu (Mandated Reviewer)	Justin Yu
☐ **Testing procedure: TMP/CTF Stage 1:**		
Testing location/ address ..... :		
Tested by (name + signature)..... :		
Approved by (name + signature)..... :		
☐ **Testing procedure: WMT/CTF Stage 2:**		
Testing location/ address ..... :		
Tested by (name + signature)..... :		
Witnessed by (name + signature)..... :		
Approved by (name + signature)..... :		
☐ **Testing procedure: SMT/CTF Stage 3 or 4:**		
Testing location/ address ..... :		
Tested by (name + signature)..... :		
Witnessed by (name + signature)..... :		
Approved by (name + signature)..... :		
Supervised by (name + signature) ..... :		

List of Attachments (including a total number of pages in each attachment):

Photo of EUT: 42 pages

Circuit Diagram / Layout: 6 pages

National difference: 8 pages

Evaluation sheet for interchangeable plug portion: 36 pages

Summary of testing

Tests performed (name of test and test clause):	**Testing location:**
4.11 Power Input 5.9.2 Accessible parts 7.1.2 Legibility of Marking 7.1.3 Durability of marking 8.4.2 ACCESSIBLE PARTS including APPLIED PARTS 8.4.3 Plug-measurement of voltage 8.6.4 Impedance and current-carrying capability 8.7 Leakage current 8.8.3 Dielectric strength 8.8.4.1 Mechanical strength and resistance to heat 8.9.1 Creepage distance and air clearance 8.9.2 Application for creepage distance and air clearance 8.10 Components and wiring 11.1 Excessive temperatures 13.2 Single fault condition 15.5.1.2 Transformer short circuit test 15.5.1.3 Transformer overload test	Intertek Testing Services Shanghai Building 86, 1198 Qinzhou Road (North), Shanghai, China, 200233

Summary of compliance with National Differences

List of countries addressed:

Canada, USA, Switzerland

Group- and national differences for the CENELEC countries according to EN 60601-1:2006 + A11:2011 + A1:2013. The text of the International Standard IEC 60601-1:2005/A1:2012 was approved by CENELEC as a European Standard without any modification.

☒ The product fulfils the requirements of IEC 60601-1: 2005 + CORR. 1:2006 + CORR. 2:2007 + AM1:2012 & EN 60601-1:2006 + A11:2011 + A1:2013 & ANSI/AAMI ES60601-1:2005/A1:2012 & CAN/CSA-C22.2 No. 60601-1:14.

Copy of marking plate

The artwork below may be only a draft. The use of certification marks on a product must be authorized by the respective NCBs that own these marks.

GT*96180-**

GT*96300-**

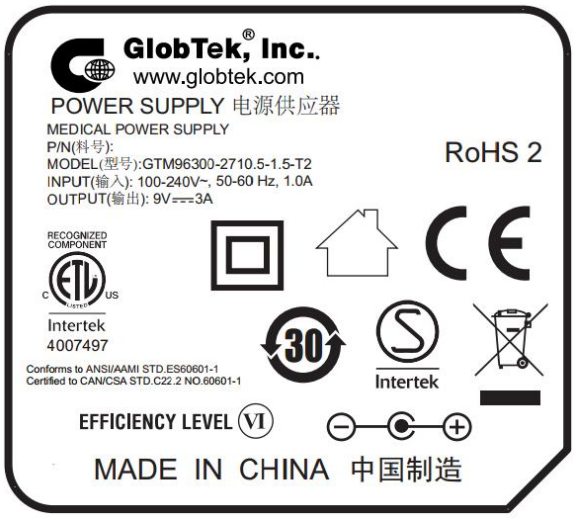

GT*91120-**

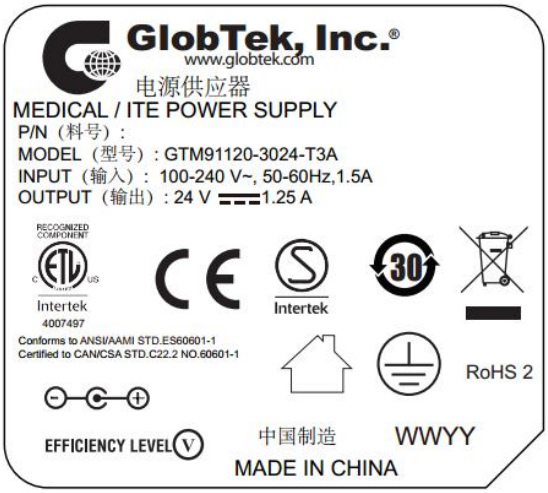

GENERAL INFORMATION	
Test item particulars (see also Clause 6):	
Classification of installation and use ..... :	~~transportable /~~ portable ~~/ stationary / mobile / fixed / permanently installed / hand-held, body-worn~~ for power adapter model. Final determination in end product evaluation for open frame model.
Device type (component/sub-assembly/ equipment/ system):	Component
Intended use (Including type of patient, application location) :	PSU (external power adapter or internal power supply board))
Mode of operation.....:	Continuous ~~/ non-continuous~~
Supply connection	~~internally powered /permanently installed /~~ appliance coupler ~~/ non-detachable cord~~ for power adapter model. Final determination in end product evaluation for open frame model.
Accessories and detachable parts included.....:	None
Other options include .....:	None
Testing	
Date of receipt of test item(s) .....:	2016-05-18
Dates tests performed.....:	2016-05-18 to 2016-07-29
Possible test case verdicts:	
- test case does not apply to the test object .....:	N/A
- test object does meet the requirement .....:	Pass (P)
- test object was not evaluated for the requirement .....:	N/E (collateral standards only)
- test object does not meet the requirement.....:	Fail (F)
Abbreviations used in the report:	
- normal condition ..... : N.C.	- single fault condition ..... : S.F.C.
- means of Operator protection ..... : MOOP	- means of Patient protection .... : MOPP

General remarks:

"(See Attachment #)" refers to additional information appended to the report.
"(See appended table)" refers to a table appended to the report.
The tests results presented in this report relate only to the object tested.
This report shall not be reproduced except in full without the written approval of the testing laboratory.
List of test equipment must be kept on file and available for review.
Additional test data and/or information provided in the attachments to this report.

Throughout this report a ☐ comma / ☒ point is used as the decimal separator.

This report is for the exclusive use of Intertek's Client and is provided pursuant to the agreement between Intertek and its Client. Intertek's responsibility and liability are limited to the terms and conditions of the agreement. Intertek assumes no liability to any party, other than to the Client in accordance with the agreement, for any loss, expense or damage occasioned by the use of this report. Only the Client is authorized to permit copying or distribution of this report and then only in its entirety. Any use of the Intertek name or one of its marks for the sale or advertisement of the tested material, product or service must first be approved in writing by Intertek. The observations and test results in this report are relevant only to the sample tested. This report by itself does not imply that the material, product, or service is or has ever been under an Intertek certification program.

This Test Report Form is intended for the investigation of power supplies in accordance with IEC 60601-1:2005, 3rd edition + AM1. The Risk Management was excluded from the investigation; this shall be clearly identified in this report and on the accompanying CB Test Certificate.

Additional test data and/or information may be provided in the attachments to this report.

Manufacturer's Declaration per sub-clause 4.2.5 of IECEE 02:2012

The application for obtaining a CB Test Certificate includes more than one factory location and a declaration from the Manufacturer stating that the sample(s) submitted for evaluation is (are) representative of the products from each factory has been provided.....:	☒ **Yes** ☐ **Not applicable**

When differences exist; they shall be identified in the General product information section.

Name and address of factory (ies) .....:	Factory 1 GlobTek, Inc. 186 Veterans Dr. Northvale, NJ 07647 USA Factory 2 GlobTek (Suzhou) Co., Ltd Building 4, No. 76, Jin Ling East Rd., Suzhou Industrial Park, Suzhou, JiangSu 215021, China

General product information:

Product covered by this report is medical power supply module.
Desktop / direct plug-in power supply are provided with suitable external enclosure. The top and bottom parts of the enclosure are ultrasonic welded.
Open frame power supplies are without external enclosure. Encapsulated type has an enclosure of thickness 2.0 mm enclosing 3 sides .
The products were tested to be suitable for connection to ≤ 16 A (IEC) and ≤ 20 A (USA) branch circuit in series. The unit is approved for TN mains star connections. The unit provides internally two fuses.
The power supplies are rated class I or class II. Open frame and encapsulated class I power supplies shall be properly bonded to the main protective bonding termination in the end product.
All the types are designed for continuous operation.

Model Differences:

GT**-*****
The 1st "*" part can be 'M' or '-' or 'H' for market identification and not related to safety.
The 2nd"*" can be 96180 or 96300 or 91120 or 91128 for market identification
The 3rd "*" denotes the rated output wattage designation, which can be "01" to "36", with interval of 1.
The 4th "*" denotes the standard rated output voltage designation, when the 2nd"*" = 96180 which can be "07","11", "17.9","30", "38" or "48"; when the 2nd"*"=96300 or 91120 which can be "07.5","10.5", "14.5","19.5", "24", "36" or "48".
The 5th "*"is optional deviation, subtracted from standard output voltage, which can be "-0.01" to "-12.0" with interval of 0.01, or blank to indicate no voltage different.
The 4th "*" and 5th "*" together denote the output voltage, with a range of 5 - 48 volts.
The 6th"*"= blank, it means wall plug in with interchangeable blade
=-T2 means desktop class II with C8 AC inlet
=-T2A means desktop class II with C18 AC inlet
=-T3 means desktop class I with C14 AC inlet
=-T3A means desktop class I with C6 AC inlet
=-R2 means hybrid desktop housing class II with C8 AC inlet
=-R3A means hybrid desktop housing class I with C6 AC inlet
=-F means Open Frame class I
=-FW means Open Frame class II
=-P2 means Encapsulated class II
=-P3 means Encapsulated class I
When the 2nd"*"=91128,
the model will be GTM91128LI1CEL Output: 4.2V, 1000mA;
or Model GTM91128LI2CEL Output: 8.4V, 1000mA;
or Model GTM91128LI3CEL Output: 12.6V, 1000mA;
The last * denote any six character = 0-9 or A-Z or ()[] or – or blank for marketing purposes.

Ratings

When 2nd"*" = 96180, Input：100-240V~,50-60Hz, 0.6A Output: 5-48Vdc

When 2nd"*" = 96300, 91120 or 91128, Input：100-240V~,50-60Hz,1.5A or 1.0A Output: 5-48Vdc

Model Details:
GT*96180-** Interchangeable plug models**

Model	Output Voltage	Max. output current	Max. output power
GT*96180-*07**	5-7V	3.6A	18W
GT*96180-*11**	7.1-11V	2.53A	18W
GT*96180-*17.9**	11.1-17.9V	1.62A	18W
GT*96180-*30**	18-30V	1.0A	18W

GT*96180-*38**	30.1-38V	0.6A	18W
GT*96180-*48**	38.1-48V	0.47A	18W

GT*96180-*-T2/T2A/T3/T3A* Desktop models**

Model	Output Voltage	Max. output current	Max. output power
GT*96180-*07*-T2/T2A/T3/T3A*	5-7V	3.6A	18W
GT*96180-*11*-T2/T2A/T3/T3A*	7.1-11V	2.53A	18W
GT*96180-*17.9*-T2/T2A/T3/T3A*	11.1-17.9V	1.62A	18W
GT*96180-*30*-T2/T2A/T3/T3A*	18-30V	1.0A	18W
GT*96180-*38*-T2/T2A/T3/T3A*	30.1-38V	0.6A	18W
GT*96180-*48*-T2/T2A/T3/T3A*	38.1-48V	0.47A	18W

GT*96300-*-T2/T2A/T3/T3A/R2/R3A* Desktop models**

Model	Output Voltage	Max. output current	Max. output power
GT*96300-*07.5*-T2/T2A/T3/T3A/R2/R3A*	5-7.5V	4.5A	22.5W
GT*96300-*10.5*-T2/T2A/T3/T3A/R2/R3A*	7.6-9V	3.94A	30W
GT*96300-*10.5*-T2/T2A/T3/T3A/R2/R3A*	9.1-10.5V	3.95A	36W
GT*96300-*14.5*-T2/T2A/T3/T3A/R2/R3A*	10.6-14.5V	3.39A	36W
GT*96300-*19.5*-T2/T2A/T3/T3A/R2/R3A*	14.6-19.5V	2.46A	36W
GT*96300-*24*-T2/T2A/T3/T3A/R2/R3A*	19.6-24V	1.83A	36W
GT*96300-*36*-T2/T2A/T3/T3A/R2/R3A*	24.1-36V	1.49A	36W
GT*96300-*48*-T2/T2A/T3/T3A/R2/R3A*	36.1-48V	0.99A	36W

GT*91120-*-T2/T3A/F/FW/P2/P3* External/Hybird desktop or direct plug-in model or Open Frame or Encapsulated**

Model	Output Voltage	Max. output current	Max. output power
GT*91120-*07.5*-T2/T3A/F/FW/P2/P3*	5-7.5V	4A	30W
GT*91120-*10.5*-T2/T3A/F/FW/P2/P3*	7.6-9V	3.94A	30W
GT*91120-*10.5*-T2/T3A/F/FW/P2/P3*	9.1-10.5V	3.95A	30W
GT*91120-*14.5*-T2/T3A/F/FW/P2/P3*	10.6-14.5V	2.83A	30W
GT*91120-*19.5*-T2/T3A/F/FW/P2/P3*	14.6-19.5V	2A	30W
GT*91120-*24*-T2/T3A/F/FW/P2/P3*	19.6-24V	1.6A	30W
GT*91120-*36*-T2/T3A/F/FW/P2/P3*	24.1-36V	1.25A	30W
GT*91120-*48*-T2/T3A/F/FW/P2/P3*	36.1-48V	0.83A	30W

Technical Considerations:

Scope of Power Supply evaluation defers the following clauses to be determined as part of the end product investigation:

- **Clause 7.5 (Safety Signs),**
- **Clause 7.9 (Accompanying Documents),**
- **Clause 9 (ME Hazard), except 9.1 and 9.3 are evaluated,**
- **Clause 10 (Radiation),**
- **Clause 14 (PEMS),**
- **Clause 16 (ME Systems)**
- **Risk Management was excluded from this investigation.**

IEC 60601-1			
Clause	Requirement + Test	Result - Remark	Verdict

INSULATION DIAGRAM

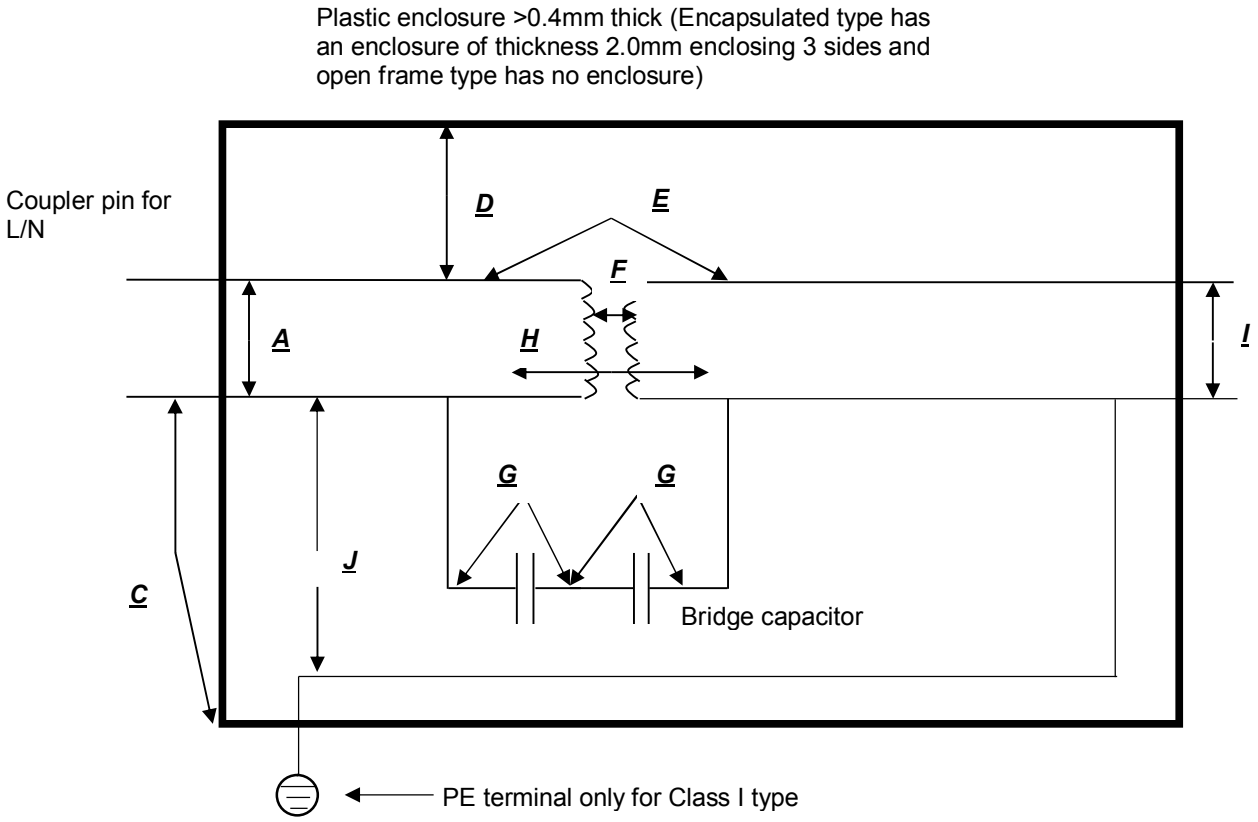

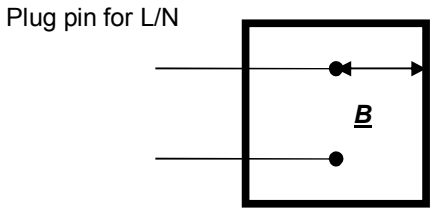

IEC 60601-1			
Clause	Requirement + Test	Result - Remark	Verdict

TABLE: INSULATION DIAGRAM		P
For Interchangeable plug, direct plug-in, Desktop, Encapsulated models		
Pollution degree ..... :	2	—
Overvoltage category ..... :	II	—
Altitude ..... :	5000m	—
Additional details on parts considered as applied parts..... :	☒ None ☐ Areas _____ (See Clause 4.6 for details)	—

Area	Number and type of Means of Protection: MOOP, MOPP	CTI	Working voltage		Required creepage (mm)	Required clearance (mm)	Measured creepage (mm)	Measured clearance (mm)	Remarks
			V_{rms}	V_{pk}					
A	MOOP	IIIb	240	340	2.96[7]	2.96[1]	3.75	3.75	Opposite polarity of mains part
B	2MOOP	IIIb	240	340	5.92[7]	5.92[1]	8	8	Plug pin-out on the connector side to accessible part when the plug portion is plugged in the socket without the power supply correctly attached.
C	2MOOP	IIIb	240	340	5.92[7]	5.92[1]	9	9	Mains part (plug portion) to outer enclosure (accessible position during normal use)
D	2MOOP	IIIb	240	340	5.92[7]	5.92[1]	9	9	Internal mains part to accessible outer enclosure
E	2MOPP	IIIb	240[3]	--	7.84[2]	6.45[1]	9.7[4]	7.5[4]	Mains part to secondary circuits (Optocoupler)
F	2MOPP	IIIb	240[3]	--	7.84[2]	6.45[1]	8.2[5]	7.4[5]	Mains part to

IEC 60601-1			
Clause	Requirement + Test	Result - Remark	Verdict

									secondary circuits (Transformer)
G	**MOPP (Each) x 2**	**IIIb**	**240[3]**	**--**	**4.0[2]**	**3.225[1]**	**6**	**6**	**Mains part to secondary circuits (Y capacitor x 2)**
H	**2MOPP**	**IIIb**	**240[3]**	**--**	**7.84[2]**	**6.45[1]**	**8.2**	**8.2**	**Mains part to secondary circuits (Along PCB trace)**
I	**2MOOP**	**IIIb**	**--**	**Max. 48Vdc**	**--**	**--**	**--**	**--**	**Accessible part per 8.4.2 c)**
J	**MOPP**	**IIIb**	**240[3]**	**--**	**4.0[2]**	**3.225[1]**	**4.8**	**4.8**	**Line/Neutral to PE terminal trace (for Class I) (floating for class II, shall be evaluated in end product)[8]**

Supplementary Information:

1) **Multiplication factor for MOOP: 1.48; Multiplication factor for MOPP: 1.29.**
2) **Linear interpolation is applied to the determination of required creepage.**
3) **The working voltage is highest measured value which acquired by testing all the models listed in the report at the rated input voltage, but not less than the rated input voltage.**
4) **The minimum creepage and clearance is selected from all the types of optocouplers.**
5) **The transformer core regarded as primary conductor is wrapped with 2 layers of insulating tape and the secondary pin-out adopts the jump lead wire soldering.**
6) **There is a slot min. 1 mm wide between two sides of pads of components.**
7) **A CREEPAGE DISTANCE cannot be less than the required air clearance.**
8) **For Encapsulated type, there is not earthing terminal for earthing wire in primary circuit, earthing wire is located on secondary circuit only, so no insulation J exist.**

For open frame models

Pollution degree ..... :	**2**	—
Overvoltage category ..... :	**II**	—
Altitude ..... :	**2000m**	—
Additional details on parts considered as applied parts..... :	☒ **None** ☐ **Areas _____** **(See Clause 4.6 for details)**	—

Area	Number and type of	CTI	Working voltage	Required creepage	Required clearance	Measured creepage	Measured clearance	Remarks

IEC 60601-1			
Clause	Requirement + Test	Result - Remark	Verdict

	Means of Protection: MOOP, MOPP		V_{rms}	V_{pk}	(mm)	(mm)	(mm)	(mm)	
A	**MOOP**	**IIIb**	**240**	**340**	**2.5**	**2**	**3.75**	**3.75**	**Opposite polarity of mains part**
E	**2MOPP**	**IIIb**	**240[3]**	**--**	**7.84[2]**	**5**	**9[4]**	**7.5[4]**	**Mains part to secondary circuits (Optocoupler)**
F	**2MOPP**	**IIIb**	**240[3]**	**--**	**7.84[2]**	**5**	**8.2[5]**	**7.4[5]**	**Mains part to secondary circuits (Transformer)**
G	**MOPP (Each) x 2**	**IIIb**	**240[3]**	**--**	**4**	**2.5**	**6**	**6**	**Mains part to secondary circuits (Y capacitor x 2)**
H	**2MOPP**	**IIIb**	**240[3]**	**--**	**7.84[2]**	**5**	**9.5**	**9.5**	**Mains part to secondary circuits (Along PCB trace)**
I	**2MOOP**	**IIIb**	**--**	**Max. 48Vdc**	**--**	**--**	**--**	**--**	**Accessible part per 8.4.2 c)**
J	**MOPP**	**IIIb**	**240[3]**	**--**	**4**	**2.5**	**4.7**	**4.7**	**Line/Neutral to PE terminal trace (for Class I) (floating for class II, shall be evaluated in end product)**

Supplementary Information:

1) **Multiplication factor for MOOP: 1.00; Multiplication factor for MOPP: 1.00.**
2) **Linear interpolation is applied to the determination of required creepage.**
3) **The working voltage is highest measured value which acquired by testing all the models listed in the report at the rated input voltage, but not less than the rated input voltage.**
4) **The minimum creepage and clearance is selected from all the types of optocouplers.**
5) **The transformer core regarded as primary conductor is wrapped with 2 layers of insulating tape and the secondary pin-out adopts the jump lead wire soldering.**
6) **There is a slot min. 1 mm wide between two sides of pads of components.**

IEC 60601-1			
Clause	Requirement + Test	Result - Remark	Verdict

7) A CREEPAGE DISTANCE cannot be less than the required air clearance.

INSULATION DIAGRAM CONVENTIONS and GUIDANCE:

A measured value must be provided in the value columns for the device under evaluation. The symbol > (greater than sign) must not be used. Switch-mode power supplies must be re-evaluated in the device under evaluation therefore N/A must not be used with a generic statement that the component is certified.

Insulation diagram is a graphical representation of equipment insulation barriers, protective impedance and protective earthing. If feasible, use the following conventions to generate the diagram:

- All isolation barriers are identified by letters between separate parts of diagram, for example separate transformer windings, optocouplers, wire insulation, creepage and clearance distances.
- Parts connected to earth with large dots are protectively earthed. Other connections to earth are functional
- Applied parts are extended beyond the equipment enclosure and terminated with an arrow.
- Parts accessible to the operator only are extended outside of the enclosure, but are not terminated with an arrow.

IEC 60601-1			
Clause	Requirement + Test	Result - Remark	Verdict

4	**GENERAL REQUIREMENTS**		
4.1	**Requirements of this standard applied in NORMAL USE and reasonably foreseeable misuse**		P
4.2	**RISK MANAGEMENT PROCESS FOR ME EQUIPMENT OR ME SYSTEMS**	RM is not included for component power supply, the acceptability of risk of the power supply is determined as part of the end product.	N/A
4.3	**Performance of clinical functions necessary to achieve INTENDED USE or that could affect the safety of the ME EQUIPMENT or ME SYSTEM were identified during RISK ANALYSIS.**	RM is not included for component power supply, the acceptability of risk of the power supply is determined as part of the end product.	N/A
4.4	**EXPECTED SERVICE LIFE stated in RISK MANAGEMENT FILE .....:**	RM is not included for component power supply, the expected service life and acceptability of risk of the power supply are determined as part of the end product.	N/A
4.5	**Alternative means of addressing particular RISKS considered acceptable based on MANUFACTURER'S justification that RESIDUAL RISKS resulting from application of alternative means are comparable to the RESIDUAL RISKS resulting from requirements of this standard.....:**	RM is not included, no alternative means of addressing particular risks were considered	N/A
4.6	**RISK MANAGEMENT PROCESS identifies parts that can come into contact with PATIENT but not defined as APPLIED PARTS, subjected to the requirements for APPLIED PARTS, except for Clause 7.2.10.....:**	RM is not included in the investigation of component power supply	N/A
4.7	**ME EQUIPMENT remained SINGLE FAULT SAFE, or the RISK remained acceptable as determined by Clause 4.2 .....:**	RM is not included; component power supply remained Single Fault Safe, acceptability of risk to be determined as part of the end product.	N/A
	Failure of any one component at a time that could result in a HAZARDOUS SITUATION, including those in 13.1, simulated physically or theoretically .....:	See Appended Table 13.2 for simulated physical test	P
	RISK associated with failure of component during EXPECTED SERVICE LIFE of ME EQUIPMENT taken into account to evaluate if a component should be subjected to failure simulation		N/A
4.8	**All components and wiring whose failure could result in a HAZARDOUS SITUATION used according to their applicable ratings, unless specified ...:**		P

IEC 60601-1			
Clause	Requirement + Test	Result - Remark	Verdict
	Components and wiring exception in the standard or by RISK MANAGEMENT PROCESS		N/A
	Reliability of components used as MEANS OF PROTECTION assessed for conditions of use in ME EQUIPMENT, and they complied with one of the following		P
	a) Applicable safety requirements of a relevant IEC or ISO standard		P
	b) Requirements of this standard applied in the absence of a relevant IEC or ISO standard		P
4.9	**A COMPONENT WITH HIGH-INTEGRITY CHARACTERISTICS provided because a fault in a particular component can generate an unacceptable RISK .....:**	RM not included; components were identified where single fault could cause a hazard as High-Integrity Component. End product to determine the suitability of the component to prevent unacceptable Risk.	N/A
	COMPONENTS WITH HIGH-INTEGRITY CHARACTERISTICS selected and evaluated consistent with their conditions of use and reasonable foreseeable misuse during EXPECTED SERVICE LIFE of ME EQUIPMENT by reviewing RISK MANAGEMENT FILE .....:	RM not included; components were identified where single fault could cause a hazard as High-Integrity Component. End product to determine the suitability of the component to prevent unacceptable Risk.	N/A
4.10	**Power supply**		
4.10.1	**ME EQUIPMENT is suitable for connection to a SUPPLY MAINS, specified to be connected to a separate power supply, can be powered by an INTERNAL ELECTRICAL POWER SOURCE, or a combination of the three .....:**	Suitable for connection to a SUPPLY MAINS.	P
4.10.2	**Maximum rated voltage for ME EQUIPMENT intended to be connected to SUPPLY MAINS:**		P
	- 250 V for HAND-HELD ME EQUIPMENT (V) ..... :	Not hand-held equipment.	N/A
	– 250 V d.c. or single-phase a.c., or 500 V poly-phase a.c. for ME EQUIPMENT and ME SYSTEMS with a RATED input ≤ 4 kVA (V) ..... :	100-240Vac, single phase, less than 4KVA	P
	– 500 V for all other ME EQUIPMENT and ME SYSTEMS	100-240Vac, single phase, less than 4KVA	N/A
4.11	**Power input**		
	Steady-state measured input of ME EQUIPMENT or ME SYSTEM at RATED voltage and at operating settings indicated in instructions for use didn't exceed marked rating by more than 10% ..... :	See appended Table 4.11	P

IEC 60601-1			
Clause	Requirement + Test	Result - Remark	Verdict
	– Measurements on ME EQUIPMENT or a ME SYSTEM marked with one or more RATED voltage ranges made at both upper and lower limits of the range.....:	See appended Table 4.11	P
	Measurements made at a voltage equal to the mean value of the range when each marking of RATED input was related to the mean value of relevant voltage range	No such marking.	N/A
	Power input, expressed in volt-amperes, measured with a volt-ampere meter or calculated as the product of steady state current (measured as described above) and supply voltage .....:	See appended Table 4.11	P
5	**GENERAL REQUIREMENTS FOR TESTING ME EQUIPMENT**		
5.1	**TYPE TESTS determined in consideration of Clause 4, in particular 4.2**		P
	Test not performed when analysis indicated condition being tested was adequately evaluated by other tests or methods.....:	RM not provided: All test were conducted	N/A
	RISK MANAGEMENT FILE identified combinations of simultaneous independent faults that could result in a HAZARDOUS SITUATION.	RM not included: End product Risk Management must determine the need for simultaneous fault tests.	N/A
5.2	**TYPE TESTS conducted on one representative sample under investigation; multiple samples used simultaneously when validity of results was not significantly affected.....:**	Type test on single representative sample.	P
5.3	**a) Tests conducted within the environmental conditions specified in technical description**		P
	Temperature (ºC), Relative Humidity (%) .....:		—
	Atmospheric Pressure (kPa).....:		—
	b) ME EQUIPMENT shielded from other influences that might affect the validity of tests		P
	c) Test conditions modified and results adjusted accordingly when ambient temperature could not be maintained .....:	Considered in temperature test	P
5.4	**a) ME EQUIPMENT tested under least favourable working conditions specified in instructions for use .....:**	RM not provided, end product Risk Analysis to determine whether or not additional configurations should be considered during testing	N/A

IEC 60601-1			
Clause	Requirement + Test	Result - Remark	Verdict
	b) ME EQUIPMENT with adjustable or controlled operating values by anyone other than SERVICE PERSONNEL adjusted to values least favourable for the relevant test per instructions for use	EUT is component power supply, not adjustable.	N/A
	c) When test results influenced by inlet pressure and flow or chemical composition of a cooling liquid, tests performed within the limits in technical description .....:	No cooling liquid used.	N/A
	d) Potable water used for cooling	No cooling water used.	N/A
5.5	**a) Supply voltage during tests was the least favourable of the voltages specified in 4.10.2 or voltages marked on ME EQUIPMENT (V) .....:**	90/264V considered	P
	b) ME EQUIPMENT marked with a RATED frequency range tested at the least favourable frequency within the range (Hz)..... :	60Hz considered	P
	c) ME EQUIPMENT with more than one RATED voltage, both a.c./ d.c. or both external power and INTERNAL ELECTRICAL POWER SOURCE tested in conditions (see 5.4) related to the least favourable voltage, nature of supply, and type of current ..... :	90/264V, 60Hz considered	P
	d) ME EQUIPMENT intended for only d.c. supply connection tested with d.c. and influence of polarity considered..... :	No d.c supply connection	N/A
	e)ME EQUIPMENT tested with alternative ACCESSORIES and components specified in ACCOMPANYING DOCUMENTS to result in the least favourable conditions..... :	No alternative accessory	N/A
	f) ME EQUIPMENT connected to a separate power supply as specified in instructions for use	No separate power supply used	N/A
5.6	**When failure occurred or probability of future failure detected during sequence of tests, per agreement with manufacturer, all tests affecting results conducted on a new sample**	No such condition	N/A
	Alternatively, upon repair and modification of the sample, only the relevant tests conducted	No such condition	N/A
5.7	**ME EQUIPMENT or parts thereof affected by climatic conditions were set up completely, or partially, with covers detached and subjected to a humidity preconditioning prior to tests of Clauses 8.7.4 and 8.8.3 ..... :**	No additional testing should be considered.	P
	Manually detachable parts removed and treated concurrently with major parts and manually removable ACCESS COVERS were opened and detached	No such part.	N/A

IEC 60601-1			
Clause	Requirement + Test	Result - Remark	Verdict
	ME EQUIPMENT heated to a temperature between T and T + 4°C for at least 4 h and placed in a humidity chamber (relative humidity 93%±3%) and an ambient within 2 °C of T in the range of + 20 °C to + 32 °C for 48 h for units rated IPX0		P
	- For units rated higher than IPX0 test time extended to 168 h. ..... :	Pre-condition performed: 26°C, 93%RH for 168 h	P
5.8	**Unless stated otherwise, tests in this standard sequenced as in Annex B to prevent influencing results of any subsequent test**		P
5.9	**Determination of APPLIED PARTS and ACCESSIBLE PARTS**		
5.9.1	**APPLIED PARTS identified by inspection and reference to ACCOMPANYING DOCUMENTS..... :**	See clause 4.6 Remark	N/A
5.9.2	**ACCESSIBLE PARTS**		
5.9.2.1	**Accessibility, when necessary, determined using standard test finger of Fig 6 applied in a bent or straight position**	See Appended Table 5.9.2	P
	Openings preventing entry of test finger of Fig. 6 mechanically tested with a straight un-jointed test finger of the same dimensions with a force of 30 N		P
	When the straight un-jointed test finger entered, test with the standard test finger (Fig 6) was repeated, if necessary, by pushing the finger through the opening	Straight un-jointed test finger can't enter opening.	N/A
5.9.2.2	**Test hook of Fig. 7 inserted in all openings of ME EQUIPMENT and pulled with a force of 20 N for 10 s**	Test hook can't enter opening	N/A
	All additional parts that became accessible checked using standard test finger and by inspection	Test hook can't enter opening	N/A
5.9.2.3	**Conductive parts of actuating mechanisms of electrical controls accessible after removal of handles, knobs, levers and the like regarded as ACCESSIBLE PARTS.....:**	No such part.	N/A
	Conductive parts of actuating mechanisms not considered ACCESSIBLE PARTS when removal of handles, knobs, etc. required use of a TOOL .:	No such part.	N/A

6	**CLASSIFICATION OF ME EQUIPMENT AND ME SYSTEMS**		
6.2	**CLASS I ME EQUIPMENT, externally powered**	Class I or Class II construction for power adapter model. Final determination in the end product for open frame model.	P

IEC 60601-1			
Clause	Requirement + Test	Result - Remark	Verdict
	CLASS II ME EQUIPMENT, externally powered	Class I or Class II construction for power adapter model. Final determination in the end product for open frame model.	P
	INTERNALLY POWERED ME EQUIPMENT	Not internally powerd	N/A
	EQUIPMENT with means of connection to a SUPPLY MAINS complied with CLASS I or CLASS II ME EQUIPMENT requirements when so connected, and when not connected to SUPPLY MAINS with INTERNALLY POWERED ME EQUIPMENT requirements		N/A
	TYPE B APPLIED PART	No applied part	N/A
	TYPE BF APPLIED PART	No applied part	N/A
	TYPE CF APPLIED PART	No applied part	N/A
	DEFIBRILLATION-PROOF APPLIED PARTS	No applied part	N/A
6.3	**ENCLOSURES classified according to degree of protection against ingress of water and particulate matter (IPN_1N_2) as per IEC 60529..... :**	IP20 for adapter model. Final determination in the end product for open frame model.	N/A
6.4	**ME EQUIPMENT or its parts intended to be sterilized classified according to method(s) of sterilization in instructions for use..... :**	No sterilization required	N/A
6.5	**ME EQUIPMENT and ME SYSTEMS intended for use in an OXYGEN RICH ENVIRONMENT classified for such use and complied with 11.2.2**	Power supply not investigated for OXYGEN RICH ENVIRONMENT	N/A
6.6	**CONTINUOUS or Non-CONTINUOUS OPERATION ..... :**	Continuous operation	P

7	**ME EQUIPMENT IDENTIFICATION, MARKING, AND DOCUMENTS**		
7.1.2	**Legibility of Markings Test for Markings specified in Clause 7.2-7.6..... :**	See Appended Table 7.1.2	P
7.1.3	**Required markings can be removed only with a TOOL or by appreciable force, are durable and remain CLEARLY LEGIBLE during EXPECTED SERVICE LIFE of ME EQUIPMENT in NORMAL USE**		P
	a) After tests, adhesive labels didn't loosen up or curl up at edges and markings complied with requirements in Clause 7.1.2..... :	See appended Tables 7.1.3 and 8.10	P
	b) Markings required by 7.2-7.6 remained CLEARLY LEGIBLE after marking durability test ... :	See appended Tables 7.1.3 and 8.10	P
7.2	**Marking on the outside of ME EQUIPMENT or ME EQUIPMENT parts**		
7.2.1	**At least markings in 7.2.2, 7.2.5, 7.2.6 (not for PERMANENTLY INSTALLED ME EQUIPMENT), 7.2.10, and 7.2.13 were applied when size of EQUIPMENT, its part, an ACCESSORY, or ENCLOSURE did not permit application of all required markings ..... :**	See attached copy of Marking Plate	P

IEC 60601-1			
Clause	Requirement + Test	Result - Remark	Verdict
	Remaining markings fully recorded in ACCOMPANYING DOCUMENTS .....:	All required marking provided on name plate.	N/A
	Markings applied to individual packaging when impractical to apply to ME EQUIPMENT	No such condition	N/A
	A material, component, ACCESSORY, or ME EQUIPMENT intended for a single use, or its packaging marked "Single Use Only", "Do Not Reuse" or with symbol 28 of Table D.1 (ISO 7000-1051, DB:2004-01) .....:	No part intended for a single use.	N/A
7.2.2	**ME EQUIPMENT marked with:**		
	– the name or trademark and contact information of the MANUFACTURER	See marking plate	P
	– a MODEL OR TYPE REFERENCE	See attached copy of Marking Plate	P
	– a serial number or lot or batch identifier; and	See marking plate	P
	– the date of manufacture or use by date	See marking plate	P
	Detachable components of the ME EQUIPMENT not marked; misidentification does not present an unacceptable risk, or	RM not provided, end product Risk Analysis to determine whether or not additional testing should be considered	N/A
	Detachable components of the ME EQUIPMENT are marked with the name or trademark of the MANUFACTURER, and	See marking plate	P
	– a MODEL OR TYPE REFERENCE	See marking plate	P
	Software forming part of a PEMS identified with a unique identifier, such as revision level or date of release/issue, and identification are available to designated persons .....:	No software	N/A
7.2.3	**Symbol 11 on Table D.1 (ISO 7000-1641, DB: 2004-01) used, optionally, advice to OPERATOR to consult ACCOMPANYING DOCUMENTS**	See the marking label.	P
	Safety sign 10 on Table D.2 (safety sign IEC 60878 Safety 01) used, advising OPERATOR that ACCOMPANYING DOCUMENTS must be consulted	No such safety sign used.	N/A
7.2.4	**ACCESSORIES marked with name or trademark and contact information of their MANUFACTURER, and.....:**	No accessory.	N/A
	- with a MODEL or TYPE REFERENCE		N/A
	– a serial number or lot or batch identifier		N/A
	– the date of manufacture or use by date		N/A
	Markings applied to individual packaging when not practical to apply to ACCESSORIES		N/A

IEC 60601-1			
Clause	Requirement + Test	Result - Remark	Verdict
7.2.5	**ME EQUIPMENT intended to receive power from other electrical equipment in an ME SYSTEM and compliance with the requirements of this standard is dependent on that other equipment, one of the following is provided:**	Component; final determination to be performed in the end-product	N/A
7.2.6	**Connection to the Supply Mains**		
	Except for PERMANENTLY INSTALLED ME EQUIPMENT, marking appearing on the outside of part containing SUPPLY MAINS connection and, adjacent to connection point		P
	For PERMANENTLY INSTALLED ME EQUIPMENT, NOMINAL supply voltage or range marked inside or outside of ME EQUIPMENT, preferably, adjacent to SUPPLY MAINS connection	Not for permanently installed.	N/A
	– RATED supply voltage(s) or RATED voltage range(s) with a hyphen (-) between minimum and maximum voltages (V, V-V) .....:	100-240V	P
	Multiple RATED supply voltages or multiple RATED supply voltage ranges are separated by (V/V) ..:	Not so marked.	N/A
	– Nature of supply (e.g., No. of phases, except single-phase) and type of current .....:	Single phase, AC.	P
	Symbols 1-5, Table D.1 (symbols of IEC 60417-5032, 5032-1, 5032-2, 5031, and 5033, all 2002-10) used, optionally, for same parameters.....:	'~' is used.	P
	– RATED supply frequency or RATED frequency range in hertz.....:	50-60Hz	P
	– Symbol 9 of Table D.1 (symbol IEC 60417-5172, 2003-02) used for CLASS II ME EQUIPMENT ...:	Symbol 9 is used for Class II adapter model.	P
7.2.7	**RATED input in amps or volt-amps, (A, VA) ..... :**	0.6A, 1.0A, 1.5A	P
	RATED input in amps or volt-amps, or in watts when power factor exceeds 0.9 (A, VA, W) ..... :		N/A
	RATED input for one or more RATED voltage ranges provided for upper and lower limits of the range or ranges when the range(s) is/are greater than ± 10 % of the mean value of specified range (A, VA,W) .....:	100-240V	P
	Input at mean value of range marked when range limits do not differ by more than 10 % from mean value (A, VA, W) .....:	No such range provided.	N/A
	Marking includes long-time and most relevant momentary volt-ampere ratings when provided, each plainly identified and indicated in ACCOMPANYING DOCUMENTS (VA) .....:	No such rating provided.	N/A
	Marked input of ME EQUIPMENT provided with means for connection of supply conductors of other electrical equipment includes RATED and marked output of such means (A, VA, W) .....:	No such rating provided.	N/A

IEC 60601-1			
Clause	Requirement + Test	Result - Remark	Verdict
7.2.8	**Output connectors**		
7.2.8.1	**See 16.9.2.1 b) for MULTIPLE SOCKET-OUTLETS integral with ME EQUIPMENT**	No MSO	N/A
7.2.8.2	**Output connectors are marked, except for MULTIPLE SOCKET-OUTLETS or connectors intended for specified ACCESSORIES or equipment**		P
	Rated Voltage (V), Rated Current (A) .....:	See model similarity	—
	Rated Power (W), Output Frequency (Hz).....:	See model similarity	—
7.2.9	**ME EQUIPMENT or its parts marked with the IP environmental Code per IEC 60529 according to classification in 6.3 (Table D.3, Code 2), marking optional for ME EQUIPMENT or parts rated IPX0. ..:**	IP20	N/A
7.2.10	**Degrees of protection against electric shock as classified in 6.2 for all APPLIED PARTS marked with relevant symbols as follows (not applied to parts identified according to 4.6) .....:**	No Applied Parts in power supply	N/A
7.2.11	**ME EQUIPMENT not marked to the contrary assumed to be suitable for CONTINUOUS OPERATION**		P
	DUTY CYCLE for ME EQUIPMENT intended for non-CONTINUOUS OPERATION appropriately marked to provide maximum "on" and "off" time.....:	Continuous operation.	N/A
7.2.12	**Type and full rating of a fuse marked adjacent to ACCESSIBLE fuse-holder**	No accessible fuse-holder	N/A
	Fuse type.....:		—
	Voltage (V) and Current (A) rating.....:		—
	Operating speed (s) and Breaking capacity ....:		—
7.2.13	**A safety sign CLEARLY LEGIBLE and visible after INSTALLATION in NORMAL USE applied to a prominent location of EQUIPMENT that produce physiological effects capable of causing HARM to PATIENT or OPERATOR not obvious to OPERATOR..:**	EUT is component power supply only, no physiological effect	N/A
	Nature of HAZARD and precautions for avoiding or minimizing the associated RISK described in instructions for use.....:	Component, to be determined as part of end product.	N/A
7.2.14	**HIGH VOLTAGE TERMINAL DEVICES on the outside of ME EQUIPMENT accessible without the use of a TOOL marked with symbol 24 of Table D.1 (symbol IEC 60417-5036, 2002-10)**	No such high voltage terminal device.	N/A
7.2.15	**Requirements for cooling provisions marked (e.g., supply of water or air).....:**	Component, to be determined as part of end product.	N/A
7.2.16	**ME EQUIPMENT with limited mechanical stability**	Component, to be determined in end-product evaluation.	N/A
7.2.17	**Packaging marked with special handling instructions for transport and/or storage.....:**	Component, to be determined as part of end product.	N/A

IEC 60601-1			
Clause	Requirement + Test	Result - Remark	Verdict
7.2.18	**RATED maximum supply pressure from an external source marked on ME EQUIPMENT adjacent to each input connector, and ..... :**	No external pressure source.	N/A
7.2.19	**Symbol 7 of Table D.1 (IEC 60417-5017, 2002-10) marked on FUNCTIONAL EARTH TERMINAL ..... :**	No FE terminal.	N/A
7.2.20	**Protective means, required to be removed to use a particular function of ME EQUIPMENT with alternate applications, marked to indicate the necessity for replacement when the function is no longer needed ..... :**	Component, to be determined as part of end product.	N/A
	No marking applied when an interlock provided		N/A
7.3	**Marking on the inside of ME EQUIPMENT or ME EQUIPMENT parts**		
7.3.1	**Maximum power loading of heating elements or lamp-holders designed for use with heating lamps marked near or in the heater (W)..... :**	No heating element, no lamp holder.	N/A
	A marking referring to ACCOMPANYING DOCUMENTS provided for heating elements or lamp-holders designed for heating lamps that can be changed only by SERVICE PERSONNEL using a TOOL	No heating element, no lamp holder.	N/A
7.3.2	**Symbol 24 of Table D.1 (symbol IEC 60417-5036, 2002-10), or safety sign 3 of Table D.2 used to mark presence of HIGH VOLTAGE parts..... :**	No such HV part.	N/A
7.3.3	**Type of battery and mode of insertion when applicable is marked..... :**	No battery..	N/A
	An identifying marking provided referring to instructions in ACCOMPANYING DOCUMENTS for batteries intended to be changed only by SERVICE PERSONNEL using a TOOL ..... :	No battery.	N/A
	A warning provided indicating replacement of lithium batteries or fuel cells when incorrect replacement by inadequately trained personnel would result in an unacceptable RISK (e.g., excessive temperatures, fire or explosion)..... :	No battery.	N/A
	An identifying marking also provided referring to instructions in ACCOMPANYING DOCUMENTS ..... :	No battery.	N/A
7.3.4	**Fuses, replaceable THERMAL CUT-OUTS and OVER-CURRENT RELEASES, accessible by use of a TOOL**		P
	Identified by specification adjacent to the component, or		P
	by reference to ACCOMPANYING DOCUMENTS		P
	Voltage (V) and Current (A) rating..... :		—
	Operating speed(s), size & breaking capacity. :		—
7.3.5	**PROTECTIVE EARTH TERMINAL marked with symbol 6 of Table D.1 (IEC 60417-5019, 2002-10), except for the PROTECTIVE EARTH TERMINAL in an APPLIANCE INLET according to IEC 60320-1**		N/A

IEC 60601-1			
Clause	Requirement + Test	Result - Remark	Verdict
	Markings on or adjacent to PROTECTIVE EARTH TERMINALS not applied to parts requiring removal to make the connection, and remained visible after connection made		N/A
7.3.6	**Symbol 7 of Table D.1 (IEC 60417-5017, 2002 -10) marked on FUNCTIONAL EARTH TERMINALS**	No FE terminal.	N/A
7.3.7	**Terminals for supply conductors marked adjacent to terminals, ...:**	No hazard if connections are interchanged.	P
	Terminal markings included in ACCOMPANYING DOCUMENTS when ME EQUIPMENT too small to accommodate markings	Marked on EUT	N/A
	Terminals exclusively for neutral supply conductor in PERMANENTLY INSTALLED ME EQUIPMENT marked with Code 1 of Table D.3 (Code in IEC 60445)	Not permanently installed	N/A
	Marking for connection to a 3-phase supply, if necessary, complies with IEC 60445	Not 3-phase	N/A
	Markings on or adjacent to electrical connection points not applied to parts requiring removal to make connection, and remained visible after connection made		P
7.3.8	**"For supply connections, use wiring materials suitable for at least X °C" (where X > than max temperature measured in terminal box or wiring compartment under NORMAL USE), or equivalent, marked at the point of supply connections**	No such high temperature	N/A
	Statement not applied to parts requiring removal to make the connection, and CLEARLY LEGIBLE after connections made		N/A
7.4	**Marking of controls and instruments**		
7.4.1	**The "on" & "off" positions of switch to control power to ME EQUIPMENT or its parts, including mains switch, marked with symbols 12 and 13 of Table D.1 (IEC 60417-5007, 2002-10, and IEC 60417-5008, 2002-10), or**	No power switch	N/A
	– indicated by an adjacent indicator light, or		N/A
	– indicated by other unambiguous means		N/A
	The "on/off" positions of push button switch with bi-stable positions marked with symbol 14 of Table D.1 (IEC 60417-5010 2002-10), and		N/A
	– status indicated by adjacent indicator light		N/A
	– status indicated by other unambiguous means		N/A
	The "on/off" positions of push button switch with momentary on position marked with symbol 15 of Table D.1 (symbol 60417-5011 2002-10), or		N/A

IEC 60601-1			
Clause	Requirement + Test	Result - Remark	Verdict
	– status indicated by adjacent indicator light		N/A
	– status indicated by other unambiguous means		N/A
7.4.2	**Different positions of control devices/switches indicated by figures, letters, or other visual means**	No such device.	N/A
	Controls provided with an associated indicating device when change of setting of a control could result in an unacceptable RISK to PATIENT in NORMAL USE.....:	No such device.	N/A
	– or an indication of direction in which magnitude of the function changes	No such device.	N/A
	Control device or switch that brings the ME EQUIPMENT into the "stand-by" condition marked with symbol IEC 60417-5009 (2002-10) (Table D.1, Symbol 29).	No stand-by switch	N/A
7.4.3	**Numeric indications of parameters on ME EQUIPMENT expressed in SI units according to ISO 80000-1 except the base quantities listed in Table 1 expressed in the indicated units**	No numeric indications of parameters.	N/A
	ISO 80000-1 applied for application of SI units, their multiples, and certain other units		N/A
	All Markings in Sub-clause 7.4 complied with tests and criteria of 7.1.2 and 7.1.3 .....:		N/A
7.5	**Safety signs**		
	Safety sign with established meaning used.	No safety sign used.	N/A
	Markings used to convey a warning, prohibition or mandatory action mitigating a RISK not obvious to OPERATOR are safety signs from ISO 7010.....:		N/A
	Affirmative statement together with safety sign placed in instructions for use if insufficient space on ME EQUIPMENT		N/A
	Specified colours in ISO 3864-1 used for safety signs.....:		N/A
7.6	**Symbols**		
7.6.1	**Meanings of symbols used for marking described in instructions for use.....:**	Accompanying documents have been checked.	P
7.6.2	**Symbols required by this standard conform to IEC or ISO publication referenced**	IEC 60417-5172: “CLASS II equipment” symbol is used. IEC 60417-5957: “For indoor use only” symbol is used.	P
7.6.3	**Symbols used for controls and performance conform to the IEC or ISO publication where symbols are defined, as applicable**	No such symbol is used.	N/A
7.7	**Colours of the insulation of conductors**		

IEC 60601-1			
Clause	Requirement + Test	Result - Remark	Verdict
7.7.1	**PROTECTIVE EARTH CONDUCTOR identified by green and yellow insulation**	Class I model provides PE conductor	P
7.7.2	**Insulation on conductors inside ME EQUIPMENT forming PROTECTIVE EARTH CONNECTIONS identified by green and yellow at least at terminations**	Class I model provides PE conductor	P
7.7.3	**Green and yellow insulation identify only following conductors:**		P
	– PROTECTIVE EARTH CONDUCTORS		N/A
	– conductors specified in 7.7.2		P
	– POTENTIAL EQUALIZATION CONDUCTORS		N/A
	– FUNCTIONAL EARTH CONDUCTORS		N/A
7.7.4	**Neutral conductors of POWER SUPPLY CORDS are "light blue" specified in IEC 60227-1 or IEC 60245-1**	No power supply cord	N/A
7.7.5	**Colours of conductors in POWER SUPPLY CORDS in accordance with IEC 60227-1 or IEC 60245-1**	No power supply cord	N/A
7.8	**Indicator lights and controls**		
7.8.1	**Red indicator lights mean: Warning (i.e., immediate response by OPERATOR required)**		N/A
	Yellow indicator lights mean: Caution (i.e., prompt response by OPERATOR required)		N/A
	Green indicator lights mean: Ready for use		P
	Other colours, if used: Meaning other than red, yellow, or green (colour, meaning) .....:		N/A
7.8.2	**Red used only for emergency control**		N/A
7.9	**ACCOMPANYING DOCUMENTS**	Accompany documents are provided for some critical issue like technical data, safety warnings, necessary information to set up, but further evaluation is needed on end product level.	P

8	**PROTECTION AGAINST ELECTRICAL HAZARDS FROM ME EQUIPMENT**		
8.1	**Limits specified in Clause 8.4 not exceeded for ACCESSIBLE PARTS and APPLIED PARTS in NORMAL or SINGLE FAULT CONDITIONS**		P
	NORMAL CONDITION considered as simultaneous occurrence of situations identified in 8.1a)		P

IEC 60601-1			
Clause	Requirement + Test	Result - Remark	Verdict
	SINGLE FAULT CONDITION considered to include the occurrences as specified in Clause 8.1b)... :	The following needs to be considered in the end product: - interruption of any one power-carrying conductor - unintended movement of a component - accidental detachment of conductors and connectors	N/A
	ACCESSIBLE PARTS determined according to 5.9		P
	LEAKAGE CURRENTS measured according to 8.7		P
8.2	**Requirements related to power sources**		
8.2.1	**Connection to a separate power source**		
	When ME EQUIPMENT specified for connection to a separate power source other than SUPPLY MAINS, separate power source considered as part of ME EQUIPMENT or combination considered as an ME SYSTEM	Connection to mains only	N/A
	Tests performed with ME EQUIPMENT connected to separate power supply when one specified		N/A
	When a generic separate power supply specified, specification in ACCOMPANYING DOCUMENTS examined		N/A
8.2.2	**No HAZARDOUS SITUATION as described in 13.1 developed when a connection with wrong polarity made for ME EQUIPMENT from an external d.c. source**	Component, to be determined in end-product evaluation	N/A
	ME EQUIPMENT connected with correct polarity maintained BASIC SAFETY and ESSENTIAL PERFORMANCE	Component, to be determined in end-product evaluation	N/A
	Protective devices that can be reset by anyone without a TOOL returns to NORMAL CONDITION on reset	Component, to be determined in end-product evaluation	N/A
8.3	**Classification of APPLIED PARTS**	No Applied Parts	N/A
8.4	**Limitation of voltage, current or energy**		
8.4.1	**PATIENT CONNECTIONS intended to deliver Current**		
	Limits in 8.4.2 not applied to currents intended to flow through body of PATIENT to produce a physiological effect during NORMAL USE	No such currents.	P
8.4.2	**ACCESSIBLE PARTS and APPLIED PARTS**		
	b) LEAKAGE CURRENTS from, to, or between ACCESSIBLE PARTS did not exceed limits for TOUCH CURRENT in Cl. 8.7.3 c) when measured per Clause 8.7.4 (mA)..... :	See appended Table 8.7	P

IEC 60601-1			
Clause	Requirement + Test	Result - Remark	Verdict
	c) Limits specified in b) not applied to parts when probability of a connection to a PATIENT, directly or through body of OPERATOR, is negligible in NORMAL USE, and the OPERATOR is appropriately instructed	The likelihood of the current flowing through body of OPERATOR to be determined in end-product evaluation	P
	– accessible contacts of connectors		P
	– contacts of fuseholders accessible during replacement of fuse	No such part.	N/A
	– contacts of lampholders accessible after removal of lamp	No such part.	N/A
	– parts inside an ACCESS COVER that can be opened without a TOOL, or where a TOOL is needed but the instructions for use instruct an OPERATOR other than SERVICE PERSONNEL to open the relevant ACCESS COVER	No such part.	N/A
	Voltage to earth or to other ACCESSIBLE PARTS did not exceed 42.4 V peak a.c. or 60 V d.c. for above parts in NORMAL or single fault condition (V a.c. or d.c.) ..... :	See appended Table 8.4.2	P
	Limit of 60 V d.c. applied with no more than 10% peak-to-peak ripple, and when ripple larger than specified value, 42.4 V peak limit applied (V d.c.) ..... :	See appended Table 8.4.2	P
	Energy did not exceed 240 VA for longer than 60 s or stored energy available did not exceed 20 J at a potential of 2 V or more (VA or J)..... :	See appended Table 8.4.2	P
	LEAKAGE CURRENT limits referred to in 8.4.2 b) applied when voltages higher than limits in 8.4.2 c) were present (mA)..... :	See appended Table 8.4.2	P
	d) Voltage and energy limits specified in c) above also applied to the following:	No such part.	N/A
	– internal parts, other than contacts of plugs, connectors and socket-outlets, touchable by test pin in Fig 8 inserted through an opening in an ENCLOSURE; and	No internal part is touchable for adapter model. Open frame model shall be determined in end product evaluation	N/A
	– internal parts touchable by a metal test rod with a diameter of 4 mm and a length 100 mm, inserted through any opening on top of ENCLOSURE or through any opening provided for adjustment of pre-set controls by the RESPONSIBLE ORGANIZATION in NORMAL USE using a TOOL		N/A
	Test pin or the test rod inserted through relevant openings with minimal force of no more than 1 N	No opening for adapter model. Open frame model shall be determined in end product evaluation	N/A

IEC 60601-1			
Clause	Requirement + Test	Result - Remark	Verdict
	Test rod inserted in every possible position through openings provided for adjustment of pre-set controls that can be adjusted in NORMAL USE, with a force of 10 N		N/A
	Test repeated with a TOOL specified in instructions for use		N/A
	Test rod freely and vertically suspended through openings on top of ENCLOSURE		N/A
	e) Devices used to de-energize parts when an ACCESS COVER opened without a TOOL gives access to parts at voltages above levels permitted by this Clause comply with 8.11.1 for mains isolating switches and remain effective in SINGLE FAULT CONDITION	No such part for adapter model. Open frame model shall be determined in end product evaluation	N/A
	A TOOL is required when it is possible to prevent the devices from operating		N/A
8.4.3	**Worst case voltage between pins of plug and between either supply pin and ENCLOSURE did not exceed 60 V one sec after disconnecting the plug of ME EQUIPMENT or its parts (V) ..... :**	See appended Table 8.4.3	P
	When voltage exceeded 60 V, calculated or measured stored charge didn't exceed 45 µC.. :	See appended Table 8.4.3	P
8.4.4	**Residual voltage of conductive parts of capacitive circuits, having become accessible after ME EQUIPMENT was de-energized after removal of ACCESS COVERS, didn't exceed 60V or calculated stored charge didn't exceed 45µC .. :**	No such part.	N/A
	A device manually discharging capacitors used when automatic discharging was not possible and ACCESS COVERS could be removed only with aid of a TOOL		N/A
	Capacitor(s) and connected circuitry marked with symbol 24 of Table D.1 (IEC 60417-5036, 2002-10), and manual discharging device specified in technical description ..... :		N/A
8.5	**Separation of parts**		
8.5.1	**MEANS OF PROTECTION (MOP)**		
8.5.1.1	**Two MEANS of PROTECTION provided for ME EQUIPMENT to prevent APPLIED and other ACCESSIBLE PARTS from exceeding limits in 8.4**		P
	Each MEANS OF PROTECTION categorized as a MEANS OF PATIENT PROTECTION or a MEANS OF OPERATOR PROTECTION, taking into account Clause 4.6, and flow chart in Fig A.12		P

IEC 60601-1			
Clause	Requirement + Test	Result - Remark	Verdict
	Varnishing, enamelling, oxidation, and similar protective finishes and coatings with sealing compounds re-plasticizing at temperatures expected during operation and sterilization disregarded as MEANS OF PROTECTION		P
	Components and wiring forming a MEANS OF PROTECTION comply with 8.10		P
	Insulation, CREEPAGE, CLEARANCES, components or earth connections not complying with 8.5.1.2 and 8.5.1.3 not considered as MEANS OF PROTECTION, and failure of these parts regarded as NORMAL CONDITION		P
8.5.1.2	**MEANS OF PATIENT PROTECTION (MOPP)**		P
	Solid insulation forming a MEANS OF PATIENT PROTECTION complied with dielectric strength test of Clause 8.8 at test voltage of Table 6		P
	CREEPAGE and CLEARANCES forming a MEANS OF PATIENT PROTECTION complied with Table 12		P
	PROTECTIVE EARTH CONNECTIONS forming a MEANS OF PATIENT PROTECTION complied with Cl. 8.6	Class I power adapter models have been checked. Open frame model shall be determined in end product evaluation.	P
	A Y (Y1 or Y2) capacitor complying with IEC 60384-14 considered one MEANS OF PATIENT PROTECTION .....:	See Appended Tables 8.8.3 and 8.10	P
	Single Y1 capacitor used for two MEANS OF PATIENT PROTECTION when the working voltage is less than 42,4 V peak a.c. or 60 V d.c.....:	See Appended Tables 8.8.3 and 8.10	P
	Two capacitors used in series, each RATED for total WORKING VOLTAGE across the pair and have the same NOMINAL capacitance	Two identical Y1 used in series	P
	Voltage $_{Total\ Working}$ (V) and C $_{Nominal}$ (µF).....:	250V or 500V, 2200pF	—
8.5.1.3	**MEANS OF OPERATOR PROTECTION (MOOP)**		P
	Solid insulation forming a MEANS OF OPERATOR PROTECTION complied with:		P
	– dielectric strength test of 8.8 at test voltage of Table 6; or		P
	– requirements of IEC 60950-1 for INSULATION CO-ORDINATION		P
	CREEPAGE and CLEARANCES forming a MEANS OF OPERATOR PROTECTION complied with:		P
	– limits of Tables 13 to 16 (inclusive); or		P
	– requirements of IEC 60950-1 for INSULATION CO-ORDINATION		P

IEC 60601-1			
Clause	Requirement + Test	Result - Remark	Verdict
	PROTECTIVE EARTH CONNECTIONS forming a MEANS OF OPERATOR PROTECTION complied with Cl. 8.6		N/A
	– or with requirements and tests of IEC 60950-1 for protective earthing ..... :		N/A
	A Y2 (IEC 60384-14) capacitor is considered one MEANS OF OPERATOR PROTECTION..... :		N/A
	A Y1 (IEC 60384-14) capacitor is considered two MEANS OF OPERATOR PROTECTION..... :		N/A
	Two capacitors used in series each RATED for total WORKING VOLTAGE across the pair and have the same NOMINAL capacitance		N/A
	Voltage $_{Total\ Working}$ (V) and C $_{Nominal}$ (µF)..... :		—
	Points at which impedances of components, CREEPAGE, CLEARANCES, PROTECTIVE EARTH CONNECTIONS or insulation, prevent ACCESSIBLE PARTS from exceeding limits in 8.4 examined whether a failure at any of these points is to be regarded as a NORMAL or SINGLE FAULT CONDITION		P
	A MEANS OF PROTECTION protecting APPLIED PARTS, or parts identified by 4.6 as parts subject to the same requirements, considered MEANS OF PATIENT PROTECTION..... :	See the insulation diagram.	P
	A MEANS OF PROTECTION protecting other parts considered MEANS OF OPERATOR PROTECTION .... :	See the insulation diagram.	P
8.5.2	**Separation of PATIENT CONNECTIONS**	No PATIENT CONNECTIONS	N/A
8.5.3	**MAXIMUM MAINS VOLTAGE**		
	– MAXIMUM MAINS VOLTAGE determined to be the highest RATED supply voltage for single-phase or d.c. SUPPLY MAINS powered ME EQUIPMENT, as well as INTERNALLY POWERED ME EQUIPMENT with a means of connection to a SUPPLY MAINS (V)..... :	240Vac	P
	When less than 100 V, MAXIMUM MAINS VOLTAGE was 250 V	No such condition.	N/A
	– MAXIMUM MAINS VOLTAGE was the highest RATED phase to neutral supply voltage for poly-phase ME EQUIPMENT (V) ..... :	No poly-phase supply	N/A
	– for other INTERNALLY POWERED ME EQUIPMENT, maximum mains voltage was 250 V	Not internally powered	N/A
8.5.4	**WORKING VOLTAGE**		P
	– Input supply voltage to ME EQUIPMENT was RATED voltage or voltage within RATED range resulting in highest measured value (V)..... :	240Vac	P

IEC 60601-1			
Clause	Requirement + Test	Result - Remark	Verdict
	– WORKING VOLTAGE for d.c. voltages with superimposed ripple was average value when peak-to-peak ripple less than 10% of average value or peak voltage when peak-to-peak ripple exceeding 10% of average value (V) ..... :	See Insulation Diagram and Insulation Table	P
	– WORKING VOLTAGE for each MEANS OF PROTECTION forming DOUBLE INSULATION was voltage DOUBLE INSULATION, as a whole, subjected to (V)..... :	See Insulation Diagram and Insulation Table	P
8.5.5	**DEFIBRILLATION-PROOF APPLIED PARTS**	No DEFIBRILLATION-PROOF APPLIED PARTS	N/A
8.6	**Protective and functional earthing and potential equalization of ME EQUIPMENT**		
8.6.1	**Requirements of 8.6.2 to 8.6.8 applied**		P
	Parts complying with IEC 60950-1 for protective earthing and serving as MEANS OF OPERATOR PROTECTION but not PATIENT PROTECTION exempted from requirements of 8.6.2 to 8.6.8	No such parts	N/A
8.6.2	**PROTECTIVE EARTH TERMINAL is suitable for connection to an external protective earthing system by a PROTECTIVE EARTH CONDUCTOR in a POWER SUPPLY CORD and a suitable plug or by a FIXED PROTECTIVE EARTH CONDUCTOR ..... :**	Appliance coupler	P
	Clamping means of PROTECTIVE EARTH TERMINAL of ME EQUIPMENT for FIXED supply conductors or POWER SUPPLY CORDS comply with 8.11.4.3, and cannot be loosened without TOOL	No such construction.	N/A
	Screws for internal PROTECTIVE EARTH CONNECTIONS completely covered or protected against accidental loosening from outside .... :	No such construction.	N/A
	Earth pin of APPLIANCE INLET forming supply connection to ME EQUIPMENT regarded as PROTECTIVE EARTH TERMINAL		P
	PROTECTIVE EARTH TERMINAL not used for mechanical connection between different parts of ME EQUIPMENT or securing components not related to protective or functional earthing	No such construction.	N/A
8.6.3	**PROTECTIVE EARTH CONNECTION not used for a moving part**	No such construction.	N/A
8.6.4	**a) PROTECTIVE EARTH CONNECTIONS carried fault currents reliably and without excessive voltage drop .....:**	See appended Table 8.6.4	P
	b) Allowable TOUCH CURRENT and PATIENT LEAKAGE CURRENT in SINGLE FAULT CONDITION were not exceeded, when impedance of PROTECTIVE EARTH CONNECTIONS exceeded values in 8.6.4 a) and Table 8.6.4, due to limited current capability of relevant circuits ..... :		N/A
8.6.5	**Surface coatings**		

IEC 60601-1			
Clause	Requirement + Test	Result - Remark	Verdict
	Poorly conducting surface coatings on conductive elements removed at the point of contact	No such surface coating. Final determination in end product for open frame model.	N/A
	Coating not removed when requirements for impedance and current-carrying capacity met		N/A
8.6.6	**Plugs and sockets**		
	PROTECTIVE EARTH CONNECTION where connection between SUPPLY MAINS and ME EQUIPMENT or between separate parts of ME EQUIPMENT made via a plug and socket was made before and interrupted after supply connections	Certified appliance coupler or plug.	P
	- applied also where interchangeable parts are PROTECTIVELY EARTHED		N/A
8.6.7	**Terminal for connection of a POTENTIAL EQUALIZATION CONDUCTOR**		
	– Terminal is accessible to OPERATOR with ME EQUIPMENT in any position of NORMAL USE	No potential equalization conductor.	N/A
	–accidental disconnection avoided in NORMAL USE		N/A
	– Terminal allows conductor to be detached without a TOOL		N/A
	– Terminal not used for a PROTECTIVE EARTH CONNECTION		N/A
	– Terminal marked with symbol 8 of Table D.1		N/A
	– Instructions for use contain information on function and use of POTENTIAL EQUALIZATION CONDUCTOR together with a reference to requirements of this standard		N/A
	POWER SUPPLY CORD does not incorporate a POTENTIAL EQUALIZATION CONDUCTOR		N/A
8.6.8	**FUNCTIONAL EARTH TERMINAL not used to provide a PROTECTIVE EARTH CONNECTION**		N/A
8.6.9	**Class II ME EQUIPMENT**		
	Third conductor of POWER SUPPLY CORD connected to protective earth contact of MAINS PLUG provided with CLASS II ME EQUIPMENT with isolated internal screens used as functional earth connection to the screen's FUNCTIONAL EARTH TERMINAL, coloured green and yellow	To be further evaluated in end product	N/A
	ACCOMPANYING DOCUMENTS include a statement that the third conductor in the POWER SUPPLY CORD is only a functional earth.		N/A
	TWO MEANS OF PROTECTION provided between insulation of internal screens and all internal wiring connected to them and ACCESSIBLE PARTS		N/A
8.7	**LEAKAGE CURRENTS and PATIENT AUXILIARY CURRENTS**		

IEC 60601-1			
Clause	Requirement + Test	Result - Remark	Verdict
8.7.1	**a) Electrical isolation providing protection against electric shock limits currents to values in 8.7.3 ..... :**	See appended Tables 8.7	P
	b) Specified values of EARTH LEAKAGE, TOUCH, PATIENT LEAKAGE, and PATIENT AUXILIARY CURRENTS applied in combination of conditions in appended Table 8.7..... :	See appended Tables 8.7	P
8.7.2	**Allowable values specified in 8.7.3 applied under SINGLE FAULT CONDITIONS of 8.1 b), except**		P
	– where insulation used in conjunction with a PROTECTIVE EARTH CONNECTION, insulation short circuited only under conditions in 8.6.4 b)	Final determination in end product for open frame model.	N/A
	– the only SINGLE FAULT CONDITION for EARTH LEAKAGE CURRENT was interruption of one supply conductor at a time	Final determination in end product for open frame model.	N/A
	– LEAKAGE CURRENTS and PATIENT AUXILIARY CURRENT not measured in SINGLE FAULT CONDITION of short circuiting of one constituent part of DOUBLE INSULATION		P
	SINGLE FAULT CONDITIONS not applied at same time as special test conditions of MAXIMUM MAINS VOLTAGE on APPLIED PARTS and non-PROTECTIVELY EARTHED parts of ENCLOSURE		P
8.7.3	**Allowable Values**		
	a) Allowable values in 8.7.3 b), c), and d) measured based on, and are relative to currents in Fig 12 a), or by a device measuring frequency contents of currents as in Fig 12 b. :	See appended Table 8.7	P
	b) Allowable values of PATIENT LEAKAGE and AUXILIARY CURRENTS are according to Tables 3 & 4, and values of a.c. are relative to currents having a frequency not less than 0.1Hz..... :		N/A
	c) TOUCH CURRENT did not exceed 100 µA in NORMAL CONDITION and 500 µA in SINGLE FAULT CONDITION (I_{TNC}, I_{TSFC}) ..... :	See appended Table 8.7 Final determination in end product for open frame model.	P
	d) EARTH LEAKAGE CURRENT did not exceed 5 mA in NORMAL CONDITION and 10 mA in SINGLE FAULT CONDITION (I_{ENC}, I_{ESFC})..... :	See appended Table 8.7 Final determination in end product for open frame model.	P
	Higher values of EARTH LEAKAGE CURRENT permitted for PERMANENTLY INSTALLED ME EQUIPMENT connected to a supply circuit supplying only this ME EQUIPMENT according to local regulations or IEC 60364-7-710 ..... :	Not permanently installed ME equipment.	N/A
	e) LEAKAGE CURRENTS, regardless of waveform and frequency, did not exceed 10 mA r.m.s. in NORMAL or in SINGLE FAULT CONDITION (measured with a non-frequency-weighted device ..... :	See appended Table 8.7	P

IEC 60601-1			
Clause	Requirement + Test	Result - Remark	Verdict
	f) LEAKAGE CURRENTS that can flow in a FUNCTIONAL EARTH CONDUCTOR in a non-PERMANENTLY INSTALLED ME EQUIPMENT are 5 mA in NORMAL CONDITION and 10 mA in SINGLE FAULT CONDITION ..... :	No such condition	N/A
8.7.4	**LEAKAGE and PATIENT AUXILIARY CURRENTS measurements ..... :**	See appended Table 8.7	P
8.8	**Insulation**		
8.8.1	**Insulation relied on as MEANS OF PROTECTION, including REINFORCED INSULATION subjected to testing**		P
	Insulation exempted from test (complies with clause 4.8)		P
	Insulation forming MEANS OF OPERATOR PROTECTION and complying with IEC 60950-1 for INSULATION CO-ORDINATION not tested as in 8.8	No such parts	N/A
8.8.2	**Distance through solid insulation or use of thin sheet material**		
	Solid insulation forming SUPPLEMENTARY or REINFORCED INSULATION for a PEAK WORKING VOLTAGE greater than 71 V provided with:		P
	a) 0.4 mm, min, distance through insulation, or	Enclosure is 2.0mm thick	P
	b) does not form part of an ENCLOSURE and not subject to handling or abrasion during NORMAL USE, and comprised of:		P
	– at least two layers of material, each passed the appropriate dielectric strength test ..... :	See appended Table 8.8.3	P
	– or three layers of material, for which all combinations of two layers together passed the appropriate dielectric strength test ..... :		N/A
	Dielectric strength test for one or two layers was same as for one MEANS OF PROTECTION for SUPPLEMENTARY INSULATION		N/A
	Dielectric strength test for one or two layers was same as for two MEANS OF PROTECTION for REINFORCED INSULATION	See appended Table 8.8.3	P
	BASIC, SUPPLEMENTARY, and REINFORCED INSULATION required between windings of wound components separated by interleaved insulation complying with a) or b), or both, except when		N/A
	c) Wire with solid insulation, other than solvent based enamel, complying with a)		N/A
	d) Wire with multi-layer extruded or spirally wrapped insulation complying with b) and complying with Annex L		N/A

IEC 60601-1			
Clause	Requirement + Test	Result - Remark	Verdict
	e) Finished wire with spirally wrapped or multi-layer extruded insulation, complying with Annex L	Certified triple insulated wire is used	P
	– BASIC INSULATION: minimum two wrapped layers or one extruded layer		N/A
	– SUPPLEMENTARY INSULATION: minimum two layers, wrapped or extruded		N/A
	– REINFORCED INSULATION: minimum three layers, wrapped or extruded		P
	In d) and e), for spirally wrapped insulation with CREEPAGE DISTANCES between layers less than in Table 12 or 16 (Pollution Degree 1) depending on type of insulation, path between layers sealed as a cemented joint in 8.9.3.3 and test voltages of TYPE TESTS in L.3 equal 1.6 times of normal values		N/A
	Protection against mechanical stress provided where two insulated wires or one bare and one insulated wire are in contact inside wound component, crossing at an angle between 45° and 90° and subject to winding tension..... :	Additional protection by insulating tape.	P
	Finished component complied with routine dielectric strength tests of 8.8.3..... :		N/A
	Tests of Annex L not repeated since material data sheets confirm compliance..... :	See Table 8.10 and Material Information Attachment	P
8.8.3	**Dielectric Strength**		
	Solid insulating materials with a safety function withstood dielectric strength test voltages .... :	See appended Table 8.8.3	P
8.8.4	**Insulation other than wire insulation**		
8.8.4.1	**Resistance to heat retained by all insulation and insulating partition walls during EXPECTED SERVICE LIFE of ME EQUIPMENT**		P
	ME EQUIPMENT and design documentation examined..... :	Final determination in the end product	N/A
	RISK MANAGEMENT FILE examined in conjunction with resistance to moisture, dielectric strength, and mechanical strength tests..... :	Final determination in the end product	N/A
	Satisfactory evidence of compliance provided by manufacturer for resistance to heat..... :	No evidence provided	N/A
	Tests conducted in absence of satisfactory evidence for resistance to heat..... :	Ball pressure test performed	P
	a) ENCLOSURE and other external parts of insulating material, except insulation of flexible cords and parts of ceramic material, subjected to ball-pressure test using Fig 21 apparatus... :	See Table 8.8.4.1	P

IEC 60601-1			
Clause	Requirement + Test	Result - Remark	Verdict
	b) Parts of insulating material supporting uninsulated parts of MAINS PART subjected to ball-pressure test in a), except at 125 °C ± 2 ° C or ambient indicated in technical description ±2°C plus temperature rise determined during test of 11.1 of relevant part, if higher (°C)..... :	See Table 8.8.4.1	P
	Test not performed on parts of ceramic material, insulating parts of commutators, brush-caps, and similar, and on coil formers not used as REINFORCED INSULATION	No such material	N/A
8.8.4.2	**Resistance to environmental stress**		
	Insulating characteristics and mechanical strength of all MEANS OF PROTECTION not likely to be impaired by environmental stresses including deposition of dirt resulting from wear of parts within EQUIPMENT, potentially reducing CREEPAGE and CLEARANCES below 8.9		P
	Ceramic and similar materials not tightly sintered, and beads alone not used as SUPPLEMENTARY or REINFORCED INSULATION	No such material	N/A
	Insulating material with embedded heating conductors considered as one MEANS OF PROTECTION but not two MEANS OF PROTECTION	No heating conductor	N/A
	Parts of natural latex rubber aged by suspending samples freely in an oxygen cylinder containing commercial oxygen to a pressure of 2.1 MPa ± 70 kPa, with an effective capacity of at least 10 times volume of samples	No such material	N/A
	There were no cracks visible to naked eyes after samples kept in cylinder at 70 °C ± 2 °C for 96h, and afterwards, left at room temperature for at least 16h	No such material	N/A
8.9	**CREEPAGE DISTANCES and AIR CLEARANCES**		
8.9.1.1	**CREEPAGE DISTANCES and AIR CLEARANCES are ≥ to values in Tables 12 to 16 (inclusive), except as specified in Clauses 8.9.1.2 to 8.9.1.15**		P
	- Insulation between parts of opposite polarity of the MAINS PART on the supply mains side of any mains fuse or OVER-CURRENT RELEASE, one MEANS OF OPERATOR PROTECTION are ≥ to values in Table 13, Table 14 and Table 16		P
8.9.1.2	**Tables 12 to 16 (inclusive) not applied to CREEPAGE and CLEARANCES forming MEANS OF OPERATOR PROTECTION per IEC 60950-1 for INSULATION CO-ORDINATION and used under conditions compliance was tested**	No such part。	N/A

IEC 60601-1			
Clause	Requirement + Test	Result - Remark	Verdict
8.9.1.3	**Specified min CLEARANCE applied as min CREEPAGE for CREEPAGE DISTANCES across glass, mica, ceramic and other inorganic insulating materials with similar tracking characteristics**	No such material	N/A
8.9.1.4	**When min CREEPAGE derived from Tables 12 to 16 (inclusive) was less than min applicable CLEARANCE, value of min CLEARANCE applied as min CREEPAGE DISTANCE**	Noted, but no such condition	N/A
8.9.1.5	**ME EQUIPMENT RATED to operate at an altitude of 2000 m**		N/A
	ME EQUIPMENT RATED to operate at an altitude specified by MANUFACTURER (m) ..... :	2000m for open frame models and 5000m for the rest of models	P
	Operating altitude corresponding to actual air pressure for ME EQUIPMENT intended for pressurized environments (e.g., aircraft) used to determine multiplication factor from Table 8, and AIR CLEARANCE was multiplied by this factor		P
	CREEPAGE DISTANCES not subjected to multiplication factors, but were at least as large as the resulting value for AIR CLEARANCE		P
8.9.1.6	**When WORKING VOLTAGE was between those in Tables 12 to 16 (inclusive), CREEPAGE and CLEARANCES calculated as follows:**		P
	– CREEPAGE DISTANCES determined by linear interpolation between the nearest two values, and the calculated spacing rounded off to the next higher 0.1 mm increment (mm) ..... :	See Insulation Diagram and Table	P
	– CLEARANCES for PEAK WORKING VOLTAGES above 2800 V peak or d.c. determined by linear interpolation between the nearest two values, and the calculated spacing rounded off to the next higher 0.1 mm increment (mm) ..... :	No such high voltage.	N/A
	– for AIR CLEARANCES corresponding to PEAK WORKING VOLTAGE up to 2800 V peak or d.c., the higher of the two values applied	See Insulation Diagram and Table	P
8.9.1.7	**Material groups classified in accordance with Table 9 (Material Group) ..... :**	Material group IIIb was assumed.	N/A
	Material group evaluated using 50 drops of solution A based on test data for material according to IEC 60112..... :	Material group IIIb was assumed.	N/A
	Material of unknown group considered IIIb		P
8.9.1.8	**– Pollution degree 1: Micro-environment sealed to exclude dust and moisture**	Pollution degree 2	N/A
	– Pollution degree 2: Micro-environment with non-conductive pollution, except occasional conductivity caused by condensation		P

IEC 60601-1			
Clause	Requirement + Test	Result - Remark	Verdict
	– Pollution degree 3: Micro-environment subject to conductive pollution, or dry non-conductive pollution that could become conductive due to expected condensation	Pollution degree 2	N/A
	– Pollution degree 4: Micro-environment where continuous conductivity occurs due to conductive dust, rain, or other wet conditions	Pollution degree 2	N/A
	Pollution degree 4 not used for insulation providing a MEANS OF PROTECTION	Pollution degree 2	N/A
	Where insulation between MAINS PART and earth might be compromised, measures such as maintenance ensure that micro-environment is mitigated to a lower pollution degree	No such construction.	N/A
	Means employed according to Annex M to reduce the pollution degree.....:		N/A
8.9.1.9	**Overvoltage category classification; value of MAINS TRANSIENT VOLTAGE determined from overvoltage category per IEC60664-1 and NOMINAL a.c. MAINS VOLTAGE using Table 10**		P
	V_{MT} Peak (V) ..... :	2500	—
	V_{MN} r.m.s (V) ..... :	300	—
8.9.1.10	**AIR CLEARANCE for MAINS PARTS (operating on RATED MAINS VOLTAGES up to 300 V) were values for r.m.s. or d.c. RATED MAINS VOLTAGE in Table 13 plus additional CLEARANCE in Table 14 for PEAK WORKING VOLTAGE**		P
8.9.1.11	**SUPPLY MAINS overvoltage category II applied according to IEC 60664-1**		P
	For ME EQUIPMENT intended for overvoltage category III, Tables 13 to 15 (inclusive) not used for clearance, instead values in the next MAINS TRANSIENT VOLTAGE column upwards used	No overvoltage category III	N/A
	When PATIENT protection (Table 12) is required for use of ME EQUIPMENT on overvoltage category III SUPPLY MAINS, guidance provided on values required in the rationale for Cl. 8.9 used	No overvoltage category III	N/A
8.9.1.12	**A SECONDARY CIRCUIT derived from a SUPPLY MAINS, normally, considered to be overvoltage category I according to IEC 60664-1 when the MAINS PART is overvoltage category II (Table 15)**	No measurement is taken.	N/A
	Table 15 applied to earthed SECONDARY CIRCUIT or INTERNALLY POWERED ME EQUIPMENT		N/A
	Requirements for primary circuits in Tables 13 and 14 used for an unearthed SECONDARY CIRCUIT derived from a SUPPLY MAINS		N/A

IEC 60601-1			
Clause	Requirement + Test	Result - Remark	Verdict
	Table 15 applied when SECONDARY CIRCUIT was separated from MAINS PART by a functionally earthed or PROTECTIVELY EARTHED metal screen or transients in SECONDARY CIRCUIT were below the levels expected for overvoltage category I		N/A
	Table 15 column for circuits not subject to transient over-voltages applied to:		N/A
	– d.c. SECONDARY CIRCUITS reliably connected to earth and have capacitive filtering limiting peak-to-peak ripple to 10 % of d.c. voltage, and		N/A
	– circuits in INTERNALLY POWERED ME EQUIPMENT		N/A
8.9.1.13	**For PEAK WORKING VOLTAGES above 1400 V peak or d.c. Table 15 not applied since all the following conditions were met:**	No such high peak working voltage.	N/A
	– CLEARANCE was at least 5 mm		N/A
	– insulation complied with dielectric strength test of 8.8.3 using an a.c. test voltage with an r.m.s. value equal to 1.06 times PEAK WORKING VOLTAGE, or		N/A
	– a d.c. test voltage equal to peak value of a.c. test voltage with an r.m.s. value equal to 1.06 times PEAK WORKING VOLTAGE, and		N/A
	– CLEARANCE path was partly or entirely through air or along the surface of an insulating material of material group I		N/A
	Dielectric strength test conducted only across part(s) of the path that are through air when CLEARANCE path was also partly along surface of a non- group I material		N/A
8.9.1.14	**Minimum CREEPAGE DISTANCES for two MEANS OF OPERATOR PROTECTION obtained by doubling values in Table 16 for one MEANS OF OPERATOR PROTECTION**		P
8.9.1.15	**CREEPAGE DISTANCES and AIR CLEARANCES for DEFIBRILLATION-PROOF APPLIED PARTS are 4 mm or more to meet 8.5.5.1**	No DEFIBRILLATION-PROOF APPLIED PARTS.	N/A
8.9.2	**a) Short circuiting of each single one of CREEPAGE DISTANCES and CLEARANCES in turn did not result in a HAZARDOUS SITUATION described in 13.1 for insulation in MAINS PART between parts of opposite polarity, therefore, min CREEPAGE and CLEARANCES not applied..... :**	The spacing between parts of opposite polarity fulfils the values of Table 11.	N/A
	b) Contribution to CREEPAGE DISTANCES of grooves or air gaps less than 1 mm wide limited to widths		P

IEC 60601-1			
Clause	Requirement + Test	Result - Remark	Verdict
	c) Relative positioning of CLEARANCE providing a MEANS OF PROTECTION is such that the relevant parts are rigid and located by moulding, or there is no reduction of a distance below specified value by deformation or movement of parts		P
	Normal or likely limited movements of relevant parts taken into consideration when calculating minimum AIR CLEARANCE		P
8.9.3	**Spaces filled by insulating compound**		
8.9.3.1	**Only solid insulation requirements applied where distances between conductive parts filled with insulating compound were such that CLEARANCES and CREEPAGE DISTANCES don't exist**	Certified optocoupler.	P
	Thermal cycling, humidity preconditioning, and dielectric strength tests in 8.9.3.2 and 8.9.3.4 or 8.9.3.3 and 8.9.3.4 conducted	Certified optocoupler has conformed to these tests.	P
8.9.3.2	**For insulating compound forming solid insulation between conductive parts, a single sample subjected to thermal cycling PROCEDURE of 8.9.3.4 followed by humidity preconditioning per 5.7 (for 48 hours), followed by dielectric strength test (clause 8.8.3), test voltage multiplied by 1.6..... :**	Certified optocoupler.	P
	Cracks or voids in insulating compound affecting homogeneity of material didn't occur	Certified optocoupler has conformed to these tests.	P
8.9.3.3	**Where insulating compound forms a cemented joint with other insulating parts, three samples tested for reliability of joint**	No such construction.	N/A
	A winding of solvent-based enamelled wire replaced for the test by a metal foil or by a few turns of bare wire placed close to cemented joint, and three samples tested as follows:		N/A
	– One sample subjected to thermal cycling PROCEDURE of 8.9.3.4, and immediately after the last period at highest temperature during thermal cycling, it was subjected to dielectric strength test of 8.8.3 except at 1.6 times the test voltage ..... :		N/A
	– The other two samples subjected to humidity preconditioning of 5.7, except for 48 hours only followed by a dielectric strength test of 8.8.3 at 1.6 times the test voltage		N/A
8.9.3.4	**One sample containing the cemented joint subjected to a sequence of temperature cycling tests for 10 times ..... :**	No need.	N/A
8.10	**Components and wiring**		

IEC 60601-1			
Clause	Requirement + Test	Result - Remark	Verdict
8.10.1	**Components of ME EQUIPMENT likely to result in an unacceptable RISK by their movements mounted securely as indicated in RISK MANAGEMENT FILE ..... :**	Final determination in the end-product	P
8.10.2	**Conductors and connectors of ME EQUIPMENT adequately secured or insulated to prevent accidental detachment in a HAZARDOUS SITUATION ..... :**	Final determination in the end-product	P
	Conductors and connectors of ME EQUIPMENT when breaking free at their joint are not capable of touching circuit points resulting in a HAZARDOUS SITUATION described in 13.1		P
	Breaking free of one means of mechanical restraint considered a SINGLE FAULT CONDITION	No such construction.	N/A
	Stranded conductors are not solder-coated when secured by clamping means to prevent HAZARDOUS SITUATIONS described in 13.1 due to poor contact	No stranded conductor.	N/A
8.10.3	**Flexible cords detachable without a TOOL used to interconnect different parts of ME EQUIPMENT provided with means for connection to comply with requirements for metal ACCESSIBLE PARTS of 8.4 when a connection is loosened or broken as shown by measurement or test finger .....:**	No such cord.	N/A
8.10.4	**Cord-connected HAND-HELD parts and cord-connected foot-operated control devices**		
8.10.4.1	**Control devices of ME EQUIPMENT and their connection cords contain only conductors and components operating at 42.4 V peak a.c., max, or 60 V d.c. in circuits isolated from MAINS PART by two MEANS OF PROTECTION**	No cord connected hand-held control device, no cord connected foot-operated control device.	N/A
	d.c. limit of 60 V applied to d.c. with no more than 10 % peak-to-peak ripple		N/A
	42.4 V peak limit applied when ripple exceeded 10 % peak-to-peak limit		N/A
8.10.4.2	**Connection and anchorage at both ends of a flexible cord to a HAND-HELD or foot-operated control device of ME EQUIPMENT at both ends of cable to control device complied with 8.11.3 when breaking free or shorting between conductors could result in a HAZARDOUS SITUATION described in 13.1**	No cord connected hand-held control device, no cord connected foot-operated control device.	N/A
	This requirement applied to other HAND-HELD parts when disturbance or breaking of one or more of connections could result in a HAZARDOUS SITUATION described in 13.1		N/A
8.10.5	**Mechanical protection of wiring**		

IEC 60601-1			
Clause	Requirement + Test	Result - Remark	Verdict
	a) Internal cables and wiring adequately protected against contact with a moving part or from friction at sharp corners and edges where damage to insulation could result in a HAZARDOUS SITUATION described in 13.1 ..... :	No internal moving part.	N/A
	b) Wiring, cord forms, or components are not likely to be damaged during assembly or during opening or closing of ACCESS COVERS where such damage could result in a HAZARDOUS SITUATION described in 13.1	No ACCESS COVERS	N/A
8.10.6	**Guiding rollers of insulated conductors prevent bending of movable insulated conductors around a radius of less than five times the outer diameter of the lead concerned in NORMAL USE**	No guiding roller.	N/A
8.10.7	**a) Insulating sleeve that can only be removed by breaking or cutting, or secured at both ends, is used on internal wiring of when needed..... :**	See the table 8.10.	P
	b) Sheath of a flexible cord not used as a MEANS OF PROTECTION inside ME EQUIPMENT when it is subject to mechanical or thermal stresses beyond its RATED characteristics	Within its rated characteristics. See the table 8.10.	P
	c) Insulated conductors subject to temperatures > 70 °C in NORMAL USE provided with insulation of heat-resistant material when compliance is likely to be impaired due to deterioration of insulation..... :	No such high temperature is acquired by test indicated in 11.1.	P
8.11	**MAINS PARTS, components and layout**		
8.11.1	**a) ME EQUIPMENT provided with means of electrically isolating its circuits from SUPPLY MAINS simultaneously on all poles..... :**	Appliance coupler. Final determination in the end-product for open frame model.	P
	PERMANENTLY INSTALLED ME EQUIPMENT connected to a poly-phase SUPPLY MAINS equipped with a device not interrupting neutral conductor, provided local installation conditions prevent voltage on neutral conductor from exceeding limits in 8.4.2 c)	Not permanently installed.	N/A
	PERMANENTLY INSTALLED ME EQUIPMENT provided with means to isolate its circuits electrically from the SUPPLY MAINS are capable of being locked in the off position if reconnection would result in a HAZARDOUS SITUATION or		N/A
	– any OPERATOR including SERVICE PERSONNEL is unable to view the means of isolation from their intended position		N/A
	The locking mechanism by the RESPONSIBLE ORGANIZATION, and		N/A

IEC 60601-1			
Clause	Requirement + Test	Result - Remark	Verdict
	- the isolation device specified in the ACCOMPANYING DOCUMENTS	Final determination in the end-product	N/A
	b) Means of isolation incorporated in ME EQUIPMENT, or if external, described in technical description ..... :	Appliance coupler.	P
	c) A SUPPLY MAINS switch used to comply with 8.11.1 a) complies with CREEPAGE and CLEARANCES in IEC 61058-1 for a MAINS TRANSIENT VOLTAGE of 4 kV..... :	No mains switch	N/A
	d) A SUPPLY MAINS switch not incorporated in a POWER SUPPLY CORD or external flexible lead	No mains switch	N/A
	e) Actuator of a SUPPLY MAINS switch used to comply with 8.11.1 a) complies with IEC 60447	No mains switch	N/A
	f) A suitable plug device such as an APPLIANCE COUPLER or a flexible cord with a MAINS PLUG used in non-PERMANENTLY INSTALLED ME EQUIPMENT with no SUPPLY MAINS switch to isolate it from SUPPLY MAINS considered to comply with 8.11.1 a) ..... :	See appended Table 8.10	P
	g) A fuse or a semiconductor device not used as an isolating means		P
	h) ME EQUIPMENT not provided with a device causing disconnection of ME EQUIPMENT from SUPPLY MAINS by producing a short circuit resulting in operation of an overcurrent protection device		P
	i) Parts within ENCLOSURE of ME EQUIPMENT with a circuit > 42.4 V peak a.c. or 60 V d.c. that cannot be disconnected from its supply by an external switch or a plug device accessible at all times is protected against touch even after opening ENCLOSURE by an additional covering	No such part	N/A
	A clear warning notice is marked on outside of ME EQUIPMENT to indicate it exceeds allowable touch voltage (symbol 10 of Table D.1 is insufficient)		N/A
	For a part that could not be disconnected from supply by an external switch or a plug device accessible at all times, the required cover or warning notice complied with this clause		N/A
	Standard test finger of Fig 6 applied		N/A
8.11.2	**MULTIPLE SOCKET-OUTLETS integral with ME EQUIPMENT complied with 16.2 d), second dash; and 16.9.2**	No multiple socket-outlets.	N/A
8.11.3	**POWER SUPPLY CORDS**		
8.11.3.1	**MAINS PLUG not fitted with more than one POWER SUPPLY CORD**	No power supply cord.	N/A

IEC 60601-1			
Clause	Requirement + Test	Result - Remark	Verdict
8.11.3.2	**POWER SUPPLY CORDS are no less robust than ordinary tough rubber sheathed flexible cord (IEC 60245-1:2003, Annex A, designation 53) or ordinary polyvinyl chloride sheathed flexible cord (IEC 60227-1:1993, Annex A, design. 53).. :**	No power supply cord.	N/A
	Only polyvinyl chloride insulated POWER SUPPLY CORD with appropriate temperature rating used for ME EQUIPMENT having external metal parts with a temperature > 75 °C touchable by the cord in NORMAL USE ..... :		N/A
8.11.3.3	**NOMINAL cross-sectional area of conductors of POWER SUPPLY CORDS of ME EQUIPMENT is not less than in Table 17 (mm^2 Cu) ..... :**	No power supply cord.	N/A
8.11.3.4	**APPLIANCE COUPLERS complying with IEC 60320-1 are considered to comply with 8.11.3.5 and 8.11.3.6 ..... :**	No power supply cord.	N/A
8.11.3.5	**Cord anchorage (for APPLIANCE COUPLERS not complying with IEC 60320-1)**		
	a) Conductors of POWER SUPPLY CORD provided with strain relieve and insulation protected from abrasion at point of entry to ME EQUIPMENT or a MAINS CONNECTOR by a cord anchorage	No power supply cord.	N/A
	b) Cord anchorage of POWER SUPPLY CORD is made of and arranged as follows when a total insulation failure of POWER SUPPLY CORD caused conductive non-PROTECTIVELY EARTHED ACCESSIBLE PARTS to exceed limits of 8.4:	No power supply cord.	N/A
	– insulating material, or		N/A
	– metal, insulated from conductive ACCESSIBLE PARTS non-PROTECTIVELY EARTHED by a MEANS OF PROTECTION, or		N/A
	– metal provided with an insulating lining affixed to cord anchorage, except when it is a flexible bushing forming part of the cord guard in 8.11.3.6, and complying with the requirements for one MEANS OF PROTECTION		N/A
	c) Cord anchorage prevents cord from being clamped by a screw bearing directly on cord insulation	No power supply cord.	N/A
	d) Screws to be operated when replacing POWER SUPPLY CORD do not serve to secure any components other than parts of cord anchorage	No power supply cord.	N/A
	e) Conductors of POWER SUPPLY CORD arranged to prevent PROTECTIVE EARTH CONDUCTOR against strain as long as phase conductors are in contact with their terminals when cord anchorage fails	No power supply cord.	N/A

IEC 60601-1			
Clause	Requirement + Test	Result - Remark	Verdict
	f) Cord anchorage prevents POWER SUPPLY CORD from being pushed into ME EQUIPMENT or MAINS CONNECTOR	No power supply cord.	N/A
	Conductors of POWER SUPPLY CORD supplied by MANUFACTURER disconnected from terminals or from MAINS CONNECTOR and cord subjected 25 times to a pull applied with no jerks, each time for 1 s, on sheath of the value in Table 18 ..... :		N/A
	Cord subjected to a torque in Table 18 for 1 min immediately after pull tests		N/A
	Cord anchorage did not allow cord sheath to be longitudinally displaced by more than 2 mm or conductor ends to move over a distance of more than 1 mm from their connected position		N/A
	CREEPAGE and CLEARANCES not reduced below limits in 8.9		N/A
	It was not possible to push the cord into ME EQUIPMENT or MAINS CONNECTOR to an extent the cord or internal parts would be damaged		N/A
8.11.3.6	**POWER SUPPLY CORDS other than for STATIONARY ME EQUIPMENT protected against excessive bending at inlet opening of equipment or of MAINS CONNECTOR by means of an insulating cord guard or by means of an appropriately shaped opening**	No power supply cord.	N/A
	Cord guard complied with test of IEC 60335-1:2001, Clause 25.14, or		N/A
	ME EQUIPMENT placed such that axis of cord guard projected at an angle of 45° with cord free from stress, and a mass equal 10 x D^2 gram attached to the free end of cord (g) ..... :		N/A
	Cord guard of temperature-sensitive material tested at 23 °C ± 2 °C, and flat cords bent in the plane of least resistance		N/A
	Curvature of the cord radius, immediately after mass attached, was not less than 1.5 x D..... :		N/A
8.11.4	**MAINS TERMINAL DEVICES**		
8.11.4.1	**PERMANENTLY INSTALLED and ME EQUIPMENT with non-DETACHABLE POWER SUPPLY CORD replaceable by SERVICE PERSONNEL provided with MAINS TERMINAL DEVICES ensuring reliable connection**	No mains terminal device.	N/A
	Terminals alone are not used to keep conductors in position, except when barriers are provided such that CREEPAGE and CLEARANCES cannot be reduced below 8.9 if any conductor breaks away		N/A

IEC 60601-1			
Clause	Requirement + Test	Result - Remark	Verdict
	Terminals of components other than terminal blocks complying with requirements of this Clause and marked according to 7.3.7 used as terminals intended for external conductors		N/A
	Screws and nuts clamping external conductors do not serve to secure any other component, except they also clamp internal conductors when unlikely to be displaced when fitting the supply conductors		N/A
8.11.4.2	**Arrangement of MAINS TERMINAL DEVICES**		
	a) Terminals provided for connection of external cords or POWER SUPPLY CORDS together with PROTECTIVE EARTH TERMINAL grouped to provide convenient means of connection	No mains terminal device.	N/A
	b) PROTECTIVE EARTH CONDUCTOR connections complied with 8.6		N/A
	c) Marking of MAINS TERMINAL DEVICES complied with 7.3		N/A
	d) MAINS TERMINAL DEVICES not accessible without use of a TOOL		N/A
	e) A MEANS OF PROTECTION are not short circuited when one end of a flexible conductor with NOMINAL cross-sectional area is stripped 8 mm and a single free wire is bent in each possible direction		N/A
8.11.4.3	**Internal wiring not subjected to stress and CREEPAGE and CLEARANCES not reduced below 8.9 after fastening and loosening a conductor of largest cross-sectional area 10 times**	No mains terminal device.	N/A
8.11.4.4	**Terminals with clamping means for a rewireable flexible cord did not require special preparation of conductors and conductors were not damaged and did not slip out when clamping means tightened as verified by test of 8.11.3.4**	No mains terminal device.	N/A
8.11.4.5	**Adequate space provided inside ME EQUIPMENT designed for FIXED wiring or a rewireable POWER SUPPLY CORD to allow for connection of conductors, and covers fitted without damage to conductors or their insulation**	No mains terminal device.	N/A
	Correct connection and positioning of conductors before ACCESS COVER was fitted verified by an installation test		N/A
8.11.5	**Mains fuses and OVER-CURRENT RELEASES**		

IEC 60601-1			
Clause	Requirement + Test	Result - Remark	Verdict
	A fuse or OVER-CURRENT RELEASE provided in each supply lead for CLASS I and CLASS II ME EQUIPMENT with a functional earth connection per clause 8.6.9, and in at least one supply lead for other single-phase CLASS II ME EQUIPMENT.... :	See appended Table 8.10. Fuse is provided for each lead for Class I model.	P
	– neutral conductor not fused for PERMANENTLY INSTALLED ME EQUIPMENT	Not permanently installed.	N/A
	Effect of short-circuit fault conditions in other circuits VERIFIED before eliminating fuses or OVER-CURRENT RELEASES		N/A
	Protective devices have adequate breaking capacity to interrupt the maximum fault current including the available short-circuit ..... :	See appended Table 8.10	P
	A fuse or OVER-CURRENT RELEASE not provided in a PROTECTIVE EARTH CONDUCTOR		P
	Fuses complying with IEC 60127 have high breaking capacity (1 500 A) and prospective short-circuit current > 35 A or 10 times current rating of the fuse, whichever is greater	EUT is only component, high breaking capacity fuse not used To be evaluated on end product	N/A
8.11.6	**Internal wiring of the MAINS PART**		
	a) Cross-sectional area of internal wiring in a MAINS PART between MAINS TERMINAL DEVICE or APPLIANCE INLET and protective devices is not less than minimum required for POWER SUPPLY CORD as in clause 8.11.3.3 (mm^2 Cu) ..... :	Min. 0.85 mm^2	P
	b) Cross-sectional area of other wiring in MAINS PART and sizes of tracks on printed wiring circuits sufficient to prevent fire in case of fault currents ..... :	See appended Table 13.2.	P
	When necessary, ME EQUIPMENT connected to a SUPPLY MAINS with max available short-circuit fault, and subsequent simulation of a fault in a single insulation in MAINS PART did not result in any of the HAZARDOUS SITUATIONS in 13.1.2		P

9	**PROTECTION AGAINST MECHANICAL HAZARDS OF ME EQUIPMENT AND ME SYSTEMS**		
9.1	**ME EQUIPMENT complies with Clause 4 for design and manufacture, and mechanical strength (15.3)**		P
9.2	**HAZARDS associated with moving parts**	Final determination in the end product.	N/A
9.3	**Rough surfaces, sharp corners and edges of ME EQUIPMENT that could result in injury or damage avoided or covered.....:**	No rough surface / sharp edge.	P
9.4	**Instability HAZARDS**	Component, to be determined as part of end product	N/A

IEC 60601-1			
Clause	Requirement + Test	Result - Remark	Verdict
9.5	**Expelled parts HAZARD**	No such parts	N/A
9.6	**Acoustic energy (including infra- and ultrasound) and vibration**	Component, to be determined as part of end product	N/A
9.7	**Pressure vessels and parts subject to pneumatic and hydraulic pressure**	No such parts	N/A
9.8	**HAZARDS associated with support systems**	Component, to be determined in the end product.	N/A
10	**PROTECTION AGAINST UNWANTED AND EXCESSIVE RADIATION HAZARDS**		N/A
	X-Radiation	Not applicable to component power supply	N/A
11	**PROTECTION AGAINST EXCESSIVE TEMPERATURES AND OTHER HAZARDS**		
11.1	**Excessive temperatures in ME EQUIPMENT**		P
11.1.1	**Temperatures on ME EQUIPMENT parts did not exceed values in Tables 22 and 23 operating in worst-case NORMAL USE at maximum rated ambient operating temperature T..... :**	See appended Table 11.1.1. Open frame model shall be revaluated in the end product.	P
	Surfaces of test corner did not exceed 90 °C		P
	THERMAL CUT-OUTS did not operate in NORMAL CONDITION	No thermal cut-out	N/A
11.1.2	**Temperature of APPLIED PARTS**	No such parts	N/A
11.1.3	**Measurements not made when engineering judgment and rationale by MANUFACTURER indicated temperature limits could not exceed, as documented in RISK MANAGEMENT FILE ..... :**	See appended Table 11.1.3 Acceptability of obtained values to be determined in the end product.	N/A
	Test corner not used where engineering judgment and rationale by MANUFACTURER indicated test corner will not impact measurements, as documented in RISK MANAGEMENT FILE	Test corner used	N/A
11.1.4	**GUARDS preventing contact with hot or cold accessible surfaces removable only with a TOOL**	No such guards	N/A
11.2	**Fire prevention**		
11.2.1	**ENCLOSURE has strength and rigidity necessary to prevent a fire caused by reasonably foreseeable misuse and met mechanical strength tests for ENCLOSURES in 15.3**		P
11.2.2	**Me equipment and me systems used in conjunction with OXYGEN RICH ENVIRONMENTS**	Component, not evaluated for use with Oxygen Rich Environment	N/A

IEC 60601-1			
Clause	Requirement + Test	Result - Remark	Verdict
11.2.3	**SINGLE FAULT CONDITIONS related to OXYGEN RICH ENVIRONMENTS ME EQUIPMENT and ME SYSTEMS considered**	Component, not evaluated for use with Oxygen Rich Environment	N/A
11.3	**Constructional requirements for fire ENCLOSURES of ME EQUIPMENT**		
	ME EQUIPMENT met this clause for alternate means of compliance with selected HAZARDOUS SITUATIONS and fault conditions in 13.1.2..... :	Final determination to be competed in the end product	N/A
	Constructional requirements were met, or		P
	a) Flammability classification of insulated wire within fire ENCLOSURE is FV-1, or better, based on IEC 60695 series as determined by examination of data on materials..... :	See appended Table 8.10	P
	Flammability classification of connectors, printed circuit boards, and insulating material on which components are mounted is FV-2, or better, based on IEC 60695-11-10 as decided by examination of materials data..... :	See appended Table 8.10	P
	If no FV Certification, FV tests based on IEC 60695-11-10 conducted on 3 samples of complete parts (or sections of it), including area with min. thickness, ventilation openings	UL 94 approved	N/A
	b) Fire ENCLOSURE met following:		P
	1) No openings at bottom or, as specified in Fig 39, constructed with baffles as in Fig 38, or made of perforated metal as in Table 25, or a metal screen with a mesh ≤ 2 × 2 mm centre to centre and wire diameter of at least 0.45 mm	No openings on the enclosure. Final determination to be competed in the end product for open frame model.	P
	2) No openings on the sides within the area included within the inclined line C in Fig 39		P
	3) ENCLOSURE, baffles, and flame barriers have adequate rigidity and are made of appropriate metal or of non-metallic materials, except constructions based on Table 25 and a mesh; FV-2 or better for TRANSPORTABLE ME EQUIPMENT, FV-1 or better for fixed EQUIPMENT, or STATIONARY EQUIPMENT per IEC 60695-11-10, determined by ENCLOSURE examination or flammability classification based on 11.3a)..... :	See appended Table 8.10	P
11.4	**ME EQUIPMENT and ME SYSTEMS intended for use with flammable anaesthetics**	Not evaluated for use in the presence of flammable anaesthetics.	N/A
11.5	**ME EQUIPMENT and ME SYSTEMS intended for use in conjunction with flammable agents**	Not evaluated for use in the presence of flammable agent.	N/A
11.6	**Overflow, spillage, leakage, ingress of water or particulate matter, cleaning, disinfection, sterilization and compatibility with substances used with the ME EQUIPMENT**	Final determination to be competed in the end product	N/A
11.6.5	**Ingress of water or particulate matter into ME EQUIPMENT and ME SYSTEMS**		

IEC 60601-1			
Clause	Requirement + Test	Result - Remark	Verdict
	ME EQUIPMENT with IP Code placed in least favourable position of NORMAL USE and subjected to tests of IEC 60529 (IP Code)..... :	Final determination to be competed in the end product	N/A
	ME EQUIPMENT met dielectric strength and LEAKAGE CURRENT tests and there were no bridging of insulation or electrical components that could result in the loss of BASIC SAFETY or ESSENTIAL PERFORMANCE in NORMAL CONDITION or in combination with a SINGLE FAULT CONDITION.. :	See appended Tables 8.7 8.8.3	P
11.7	**ME EQUIPMENT, ME SYSTEM, and ACCESSORIES coming into direct or indirect contact with biological tissues, cells, or body fluids assessed and documented per ISO 10993**	Component, to be determined in end-product evaluation.	N/A
11.8	**Interruption and restoration of power supply did not result in a loss of BASIC SAFETY or ESSENTIAL PERFORMANCE**	Component, to be determined in end-product evaluation.	N/A
12	**ACCURACY OF CONTROLS AND INSTRUMENTS AND PROTECTION AGAINST HAZARDOUS OUTPUTS**		N/A
12.1	**RISKS associated with accuracy of controls and instruments stated in RISK MANAGEMENT PROCESS confirmed by RISK MANAGEMENT FILE review ..... :**	Not applicable to component power supply	N/A
	PROTECTION AGAINST HAZARDOUS OUTPUT ..... :	Not applicable to component power supply	N/A
13	**HAZARDOUS SITUATIONS AND FAULT CONDITIONS**		
13.1	**Specific HAZARDOUS SITUATIONS**		
13.1.1	**None of HAZARDOUS SITUATIONS in 13.1.2-13.1.4, inclusive, occurred when SINGLE FAULT CONDITIONS applied, one at a time, as in 4.7 and 13.2**		P
13.1.2	**Emissions, deformation of ENCLOSURE or exceeding maximum temperature**		
	– Emission of flames, molten metal, poisonous or ignitable substance in hazardous quantities did not occur		P
	– Deformation of ENCLOSURE impairing compliance with 15.3.1 did not occur		P
	– Temperatures of ME EQUIPMENT parts that are not APPLIED PARTS likely to be touched did not exceed values in Table 23 when measured and adjusted as in 11.1.3 ..... :	See appended Tables 11.1.1, 11.1.2.1, and 11.1.2.2	P
	–Allowable values for "other components and materials" in Table 22 times 1.5 minus 12.5 °C were not exceeded		P
	Limits for windings in Tables 26, 27, and 31 not exceeded		P
	Table 22 not exceeded in all other cases		P

IEC 60601-1			
Clause	Requirement + Test	Result - Remark	Verdict
	Temperatures measured according to 11.1.3		P
	SINGLE FAULT CONDITIONS in 4.7, 8.1 b), 8.7.2, and 13.2.2 relative to emission of flames, molten metal, or ignitable substances, not applied to parts and components where:	Test wasn't exempted.	N/A
	– Supply circuit was unable to supply 15 W one minute after 15 W drawn from supply circuit in SINGLE FAULT CONDITION ..... :		N/A
	- or secondary circuits mounted on materials with a minimum flame rating of FV1, and		N/A
	- Secondary circuits energized by less than 60 Vdc, 42.4 Vpeak in NC and SFC, and		N/A
	- Secondary circuits limited to 100 VA or 6000 J in NC and SFC, and		N/A
	- Wire insulation in secondary circuits of types PVC, TFE, PTFE, FEP, polychloroprene or polybromide		N/A
	- or components in the circuit have HIGH INTEGRITY CHARACTERISTICS..... :		N/A
	– or parts and components completely contained within a fire ENCLOSURE complying with 11.3 as verified by review of design documentation		N/A
	After tests of this Clause, settings of THERMAL CUT-OUTS and OVER-CURRENT RELEASES did not change sufficiently to affect their safety function	Fuse only	P
13.1.3	**– limits for LEAKAGE CURRENT in SINGLE FAULT CONDITION based on 8.7.3 did not exceed..... :**	See appended Table 8.7	P
	– voltage limits for ACCESSIBLE PARTS including APPLIED PARTS in 8.4.2 did not exceed..... :	See appended Table 8.7	P
13.1.4	**ME EQUIPMENT complied with the requirements of 9.1 to 9.8 for specific MECHANICAL HAZARDS**	Component, to be determined in end product evaluation.	N/A
13. 2	**SINGLE FAULT CONDITIONS**		
13.2.1	**During application of SINGLE FAULT CONDITIONS in 13.2.2 -13.2.13, inclusive, NORMAL CONDITIONS in 8.1 a) applied in least favourable combination :**	See appended Table 13.2	P
13.2.2 – 13.2.12	**ME EQUIPMENT complied with 13.2.2 -13.2.12..... :**	See appended Table 13.2 Final determination to be competed in the end product	P
13.2.13	**ME EQUIPMENT remained safe after tests of 13.2.13.2 to 13.2.13.4 (inclusive), and cooling down to within 3 °C of the temperature in the test environment**		P

IEC 60601-1			
Clause	Requirement + Test	Result - Remark	Verdict
	ME EQUIPMENT examined for compliance or appropriate tests such as dielectric strength of motor insulation according to 8.8.3 conducted		P
	For insulation of thermoplastic materials relied upon as a MEANS OF PROTECTION (see 8.8), the ball-pressure test specified in 8.8.4.1 a) performed at a temperature 25 °C higher than temperature of insulation measured during tests of 13.2.13.2 to 13.2.13.4 (inclusive).		P
13.2.13.2	**ME EQUIPMENT with heating elements**	No Heating Elements provided	N/A
13.2.13.3	**ME EQUIPMENT with motors**	No motors provided in power supply	N/A
13.2.13.4	**ME EQUIPMENT RATED for NON-CONTINUOUS OPERATION**		
	ME EQUIPMENT (other than HAND-HELD) operated under normal load and at RATED voltage or at upper limit of RATED voltage range until increase in temperature was ≤ 5 °C in one hour, or a protective device operated	Continuous operation.	N/A
	When a load-reducing device operated in NORMAL USE, test continued with ME EQUIPMENT running idle		N/A
	Motor winding temperatures did not exceed values in 13.2.10 ..... :		N/A
	Insulation Class ..... :		—
	Maximum temperature measured (°C) ..... :		—

14	**PROGRAMMABLE ELECTRICAL MEDICAL SYSTEMS (PEMS)**		N/A
	Requirements of this clause not applied to power supply	No Such Parts/ PESS not relied upon for Basic Safety or Essential Performance	N/A

15	**CONSTRUCTION OF ME EQUIPMENT**		
15.1	**RISKS associated with arrangement of controls and indicators of ME EQUIPMENT addressed through the application of a USABILITY ENGINEERING PROCESS in accordance with IEC 60601-1-6, when applicable ..... :**	No controls and indicators.	N/A
15.2	**Parts of ME EQUIPMENT subject to mechanical wear, electrical, environmental degradation or ageing resulting in unacceptable RISK when unchecked for a long period, are accessible for inspection, replacement, and maintenance**	No such parts.	N/A
	Inspection, servicing, replacement, and adjustment of parts of ME EQUIPMENT can easily be done without damage to or interference with adjacent parts or wiring		N/A

IEC 60601-1			
Clause	Requirement + Test	Result - Remark	Verdict
15.3	**Mechanical strength**		
15.3.1	**Mould stress relief, push, impact, drop, and rough handling tests did not result in loss of BASIC SAFETY or ESSENTIAL PERFORMANCE**		P
15.3.2	**Push test conducted by subjecting external parts of ENCLOSURE to a steady force of 250 N ± 10 N for 5 s applied to a circular (30mm) plane surface, except bottom of ENCLOSURE of an ME EQUIPMENT >18 kg, using a suitable test tool ... :**	See Appended Table 15.3. Final determination to be competed in the end product	P
	No damage resulting in an unacceptable RISK sustained	See Appended Table 15.3.	P
15.3.3	**Impact test conducted by subjecting a complete ENCLOSURE or its largest non-reinforced area, except for HAND-HELD ME EQUIPMENT and parts, to a free falling 500 g ± 25 g solid smooth steel ball, approx. 50 mm in diameter from a height of 1.3 m ..... :**	See Appended Table 15.3. Final determination to be competed in the end product	P
	No damage resulting in an unacceptable RISK sustained	See Appended Table 15.3.	P
15.3.4	**Drop test**		
15.3.4.1	**Sample of HAND-HELD ME EQUIPMENT, ACCESSORIES and HAND-HELD part with SAFE WORKING LOAD allowed to fall freely once from each of 3 different positions as in NORMAL USE from height specified in ACCOMPANYING DOCUMENTS, or from 1 m onto a 50 mm ± 5 mm thick hardwood board lying flat on a concrete or rigid base ..... :**	No HAND-HELD ME EQUIPMENT.	N/A
	No unacceptable RISK resulted		N/A
15.3.4.2	**Sample of PORTABLE ME EQUIPMENT, ACCESSORIES and PORTABLE part with SAFE WORKING LOAD lifted to a height as in Table 29 above a 50 ± 5 mm thick hardwood board lying flat on a concrete floor or rigid base, dropped 3 times from each orientation in NORMAL USE (cm) .....:**	See Appended Table 15.3. Final determination to be competed in the end product	P
	No damage resulting in an unacceptable RISK sustained	No damage	N/A
15.3.5	**Rough handling tests for MOBILE ME EQUIPMENT**	Not mobile ME equipment.	N/A
15.3.6	**Examination of ENCLOSURE made from moulded or formed thermoplastic material indicated that material distortion due to release of internal stresses by moulding or forming operations will not result in an unacceptable RISK**		P

IEC 60601-1			
Clause	Requirement + Test	Result - Remark	Verdict
	Mould-stress relief test conducted by placing one sample of complete ME EQUIPMENT, ENCLOSURE or a portion of larger ENCLOSURE, for 7 hours in a circulating air oven at 10°C over the max temperature measured on ENCLOSURE in 11.1.3, but no less than 70 °C ..... :	70 °C	P
	No damage resulting in an unacceptable RISK	No damage.	P
15.3.7	**INTENDED USE, EXPECTED SERVICE LIFE, and conditions for transport and storage were taken into consideration for selection and treatment of materials used in construction of ME EQUIPMENT**	No such environmental influences.	N/A
	Based on review of EQUIPMENT, ACCOMPANYING DOCUMENTS, specifications and processing of materials, and MANUFACTURER'S relevant tests or calculations, corrosion, ageing, mechanical wear, degradation of biological materials due to bacteria, plants, animals and the like, will not result in an unacceptable RISK	Component, to be determined in end product evaluation.	N/A
15.4	**ME EQUIPMENT components and general assembly**		
15.4.1	**Incorrect connection of accessible connectors, removable without a TOOL, prevented where an unacceptable RISK exists, in particular..... :**	No such connections	N/A
15.4.2	**Temperature and overload control devices**		
15.4.2.1	**a) THERMAL CUT-OUTS and OVER-CURRENT RELEASES with automatic resetting not used in ME EQUIPMENT when their use could lead to a HAZARDOUS SITUATION described in 13.1by resetting action as verified by review of the design documentation and RISK MANAGEMENT FILE ..... :**	No such part.	N/A
	b) THERMAL CUT-OUTS with a safety function that are reset by a soldering not fitted in ME EQUIPMENT	No such part.	N/A
	c) An additional independent non-SELF-RESETTING THERMAL CUT-OUT is provided where a failure of a THERMOSTAT could in a HAZARDOUS SITUATION described in 13.1; the temperature of operation of the additional device is outside that attainable at the extreme setting of the normal control device, but within the temperature limit for the ME EQUIPMENT..... :	No such part.	N/A
	d) Operation of THERMAL CUT-OUT or OVER CURRENT RELEASE doesn't result in a HAZARDOUS SITUATION described in 13.1 or the loss of ESSENTIAL PERFORMANCE ..... :	No such part.	N/A
	e) Capacitors or other spark-suppression devices not connected between contacts of THERMAL CUT-OUTS	No such part.	N/A

IEC 60601-1			
Clause	Requirement + Test	Result - Remark	Verdict
	f) Use of THERMAL CUT-OUTS or OVER-CURRENT RELEASES do not affect safety of ME EQUIPMENT as verified by following tests:		N/A
	Positive temperature coefficient devices (PTC's) complied with IEC 60730-1: 2010, Clauses 15, 17, J.15, and J.17 as applicable		N/A
	ME EQUIPMENT containing THERMAL CUT-OUTS and OVER-CURRENT RELEASES operated under the conditions of Clause 13..... :	See appended Table 13.2	N/A
	SELF-RESETTING THERMAL CUT-OUTS and OVER-CURRENT RELEASES including circuits performing equivalent functions (other than PTC's) Certified according to appropriate standards		N/A
	In the absence of Certification in accordance with IEC standards, SELF-RESETTING THERMAL CUT-OUTS and OVER-CURRENT RELEASES including circuits performing equivalent functions (other than PTC's) operated 200 times		N/A
	Manual reset THERMAL CUT-OUTS and OVER-CURRENT RELEASES Certified in accordance with appropriate IEC standards		N/A
	When certification based on IEC standards, or data from MANUFACTURER demonstrating reliability of component to perform its safety-related function is not available, manual reset THERMAL CUT-OUTS and OVER-CURRENT RELEASES operated 10 times		N/A
	Thermal protective devices tested separately from ME EQUIPMENT when engineering judgment indicated test results would not be impacted		N/A
	g) Protective device, provided on ME EQUIPMENT incorporating a fluid filled container with heating means, operated when heater switched on with container empty and prevented an unacceptable RISK due to overheating	No such part.	N/A
	h) ME EQUIPMENT with tubular heating elements provided with protection against overheating in both leads where a conductive connection to earth could result in overheating as verified by review of design and RISK MANAGEMENT FILE ..... :	No such part.	N/A
15.4.2.2	**Temperature settings clearly indicated when means provided to vary setting of THERMOSTATS**	Not applicable to component power supply	N/A
15.4.3	**Batteries**		
15.4.3.1	**Battery housings from which gases can escape during charging or discharging are ventilated to prevent unacceptable RISK from accumulation of gasses and possible ignition :**	No batteries.	N/A

IEC 60601-1			
Clause	Requirement + Test	Result - Remark	Verdict
	Battery compartments designed to prevent accidental short circuiting of battery when this could result in a HAZARDOUS SITUATION as described in clause 13.1		N/A
15.4.3.2	**Means provided to prevent incorrect connection of polarity when a HAZARDOUS SITUATION may develop by incorrect connection or replacement of a battery ..... :**		N/A
15.4.3.3	**Overcharging of battery prevented by virtue of design when it could result in an unacceptable RISK as verified by review of design ..... :**		N/A
15.4.3.4	**Primary lithium batteries comply with IEC 80086-4**		N/A
	Secondary lithium batteries comply with IEC 62133		N/A
15.4.3.5	**A properly RATED protective device provided within INTERNAL ELECTRICAL POWER SOURCE to protect against fire caused by excessive currents when (in case of a short circuit) layout of internal wiring, cross-sectional area, rating of connected components can result in a fire :**		N/A
	Protective device has adequate breaking capacity to interrupt the maximum fault current		N/A
	Justification for OVER-CURRENT RELEASES or FUSE exclusion is documented		N/A
	Short circuit test between the positive and negative poles of an INTERNAL ELECTRICAL POWER SOURCE between the output and protective device(s) omitted where 2 MOOPs provided, or		N/A
	Short circuit between the positive and negative poles of an INTERNAL ELECTRICAL POWER SOURCE between the output and protective device(s) does not result in any HAZARDOUS SITUATION described in clause 13.1		N/A
15.4.4	**Indicator lights provided to indicate ME EQUIPMENT is ready for NORMAL USE, except when apparent to OPERATOR from normal operating position, and marking of 7.4.1 are insufficient for this purpose..... :**	No such indicator.	N/A
	An additional indicator light provided on ME EQUIPMENT with a stand-by state or a warm-up state exceeding 15 s, except when apparent to OPERATOR from normal operating position		N/A
	Indicator lights provided on ME EQUIPMENT incorporating non-luminous heaters to indicate heaters are operational when a HAZARDOUS SITUATION could exist, except when apparent to OPERATOR from normal operating position		N/A

IEC 60601-1			
Clause	Requirement + Test	Result - Remark	Verdict
	Requirement not applied to heated stylus-pens for recording purposes		N/A
	Indicator lights provided on ME EQUIPMENT to indicate an output exists where an accidental or prolonged operation of output circuit could constitute a HAZARDOUS SITUATION		N/A
	Colours of indicator lights complied with 7.8.1		N/A
	Charging mode visibly indicated in ME EQUIPMENT incorporating a means for charging an INTERNAL ELECTRICAL POWER SOURCE		N/A
15.4.5	**Pre-set controls**	No such parts in power supply	N/A
15.4.6	**Actuating parts of controls of ME EQUIPMENT**	No such parts in power supply	N/A
15.4.7	**Cord-connected HAND-HELD and foot-operated control devices**	No such parts in power supply	N/A
15.4.8	**Aluminium wires less than 16 mm^2 in cross-sectional area are not used**	No such wire.	N/A
15.4.9	**Oil container in PORTABLE ME EQUIPMENT**	No such parts in power supply	N/A
15.5	**MAINS SUPPLY TRANSFORMERS OF ME EQUIPMENT and transformers providing separation in accordance with 8.5**		
15.5.1	**Overheating**		
15.5.1.1	**Transformers of ME EQUIPMENT are protected against overheating in the event of short circuit or overload of output windings and comply with this Clause and tests of 15.5.1.2 – 3..... :**	See appended Tables 15.5.1.2 and 15.5.1.3	P
	During tests, windings did not open, no HAZARDOUS SITUATION occurred, and maximum temperatures of windings did not exceed values in Table 31		P
	Dielectric strength test of 8.8.3 conducted on transformer after short circuit and overload tests ..... :	See appended Table 15.5.2	P
15.5.1.2	**Transformer output winding short circuited, and test continued until protective device operated or THERMAL STABILITY achieved ..... :**	See appended Table 15.5.1.2	P
	Short circuit applied directly across output windings for transformers not tested according to 5X frequency and 5X voltage test of 15.5.2 a) or 2x frequency and 2x voltage test of 15.5.2 b)		N/A
15.5.1.3	**Multiple overload tests conducted on windings with more than one protective device to evaluate worst-case NORMAL USE loading and protection..... :**	No more than one protective device	N/A
15.5.2	**Transformers operating at a frequency above 1 kHz tested in accordance with clause 8.8.3..... :**		N/A

IEC 60601-1			
Clause	Requirement + Test	Result - Remark	Verdict
	Transformer windings provided with adequate insulation to prevent internal short-circuits that could cause overheating which could result in a HAZARDOUS SITUATION		P
	Dielectric strength tests were conducted in accordance with requirements of this clause with no breakdown of insulation system and no detectable deterioration of transformer ..... :	See appended Table 15.5.2	P
15.5.3	**Transformers forming MEANS OF PROTECTION as required by 8.5 comply with ..... :**	Transformer evaluated according to the requirements of this standard.	P
	- Means provided to prevent displacement of end turns beyond the inter-winding insulation		P
	- protective earth screens with a single turn have insulated overlap not less than 3mm and the width of the screen is at least equal to the axial winding length of the primary side		P
	- Exit of wires form internal windings of toroid transformers protected with double sleeving providing 2 MOPs and a total wall thickness of 0.3mm extending 20mm from the windings		P
	- insulation between primary and secondary windings complies with 8.8.2		P
	- CREEPAGE DISTANCES and AIR CLEARANCE comply with 8.9.4 and the exceptions of this sub-clause		P
16	**ME SYSTEMS**		N/A
	Evaluation of ME SYSTEMS ..... :	Component power supply; compliance determined in the end product	N/A
17	**ELECTROMAGNETIC COMPATIBILITY OF ME EQUIPMENT AND ME SYSTEMS**		N/A
	RISKS associated with items addressed in RISK MANAGEMENT PROCESS as confirmed by review . :	Not applicable to component power supply system; to be determined in the end product	N/A
ANNEX G	**PROTECTION AGAINST HAZARDS OF IGNITION OF FLAMMABLE ANESTHETIC MIXTURES**		N/A
	Parts of CATEGORY APG ME EQUIPMENT in which a FLAMMABLE ANESTHETIC MIXTURE WITH AIR occurs	Not evaluated for use with Flammable Anesthetic Mixture	N/A
ANNEX L	**INSULATED WINDING WIRES FOR USE WITHOUT INTERLEAVED INSULATION**		

IEC 60601-1			
Clause	Requirement + Test	Result - Remark	Verdict
L.1	**BASIC, SUPPLEMENTARY, DOUBLE, and REINFORCED INSULATION in wound components without interleaved insulation complied with this Annex covering round winding wires between 0.05 mm and 5.00 mm diameters**	Approved TIW is used in mains transformer.	N/A
L.2	**Wire construction**		
	Overlap of layers when wire is insulated with two or more spirally wrapped layers of tape is adequate to ensure continued overlap during manufacture of wound component	Approved TIW is used in mains transformer.	N/A
	Layers of spirally wrapped wire insulation are sufficiently secured to maintain the overlap		N/A
L.3	**Type Test**		
	The wire subjected to tests of L.3.1 to L.3.4 at a temperature and a relative humidity specified	Approved TIW is used in mains transformer.	N/A
	Temperature (°C)..... :		—
	Humidity (%)..... :		—
L.3.1	**Dielectric strength**		
	Dielectric strength test of Clause 8.8.3 for the appropriate type and number of MOP(s) conducted by preparing the sample according to IEC 60851-5:1996, Clause 4.4.1 for a twisted pair with test voltages at least twice Tables 6 & 7, but not less than below with no breakdown:	Approved TIW is used in mains transformer.	N/A
	– 3000 V for BASIC and SUPPLEMENTARY INSULATION (V)..... :		N/A
	– 6000 V for REINFORCED INSULATION (V)..... :		N/A
L.3.2	**Flexibility and adherence**		
	Sample subjected to flexibility and adherence test 8 of IEC 60851-3:1996, clause 5.1.1, using mandrel diameters of Table L.1	Approved TIW is used in mains transformer.	N/A
	Sample examined according to IEC 60851-3: 1997, clause 5.1.1.4, followed by dielectric test of clause 8.8.3, except test voltage applied between wire and mandrel with no breakdown		N/A
	Test voltage was at least the voltage in Tables 6 and 7but not less than the following:		N/A
	– 1500 V for BASIC and SUPPLEMENTARY INSULATION (V)..... :		N/A
	– 3000 V for REINFORCED INSULATION (V)..... :		N/A
	Tension applied to wire during winding on mandrel calculated from the wire diameter equivalent to 118 MPa ± 11.8 MPa ..... :		N/A
L.3.3	**Heat Shock**		

IEC 60601-1			
Clause	Requirement + Test	Result - Remark	Verdict
	Sample subjected to heat shock test 9 of IEC 60851-6:1996, followed by dielectric strength test of clause 8.8.3, except test voltage applied between the wire and mandrel	Approved TIW is used in mains transformer.	N/A
	Test voltage was at least the voltage in Tables 6 and 7, but not less than the following:		N/A
	– 1500 V for BASIC and SUPPLEMENTARY INSULATION (V)..... :		N/A
	– 3000 V for REINFORCED INSULATION (V)..... :		N/A
	Oven temperature based on Table L.2 (°C)..... :		—
	Mandrel diameter and tension applied as in clause L.3.2, (MPa; N/mm^2)..... :		N/A
	Dielectric strength test conducted at room temperature after removal from the oven		N/A
L.3.4	**Retention of electric strength after bending**		
	Five samples prepared as in L.3.2 subjected to dielectric strength and bending tests	Approved TIW is used in mains transformer.	N/A
	Test voltage was at least the voltage in Tables 6 and 7, but not less than the following:		N/A
	– 1500 V for BASIC and SUPPLEMENTARY INSULATION (V)..... :		N/A
	– 3000 V for REINFORCED INSULATION (V)..... :		N/A
	Test voltage applied between the shot and conductor.		N/A
	Mandrel diameter and tension applied as in L.3.2, (MPa; N/mm^2)..... :		N/A
L.4	**Tests during manufacture**		
L.4.1	**Production line dielectric strength tests conducted by the manufacture according to L.4.2 and L.4.3.....:**	Approved TIW is used in mains transformer.	N/A
L.4.2	**Test voltage for routine testing (100 % testing) is at least the voltage in Tables 6 and 7 but not less than the following:**	Approved TIW is used in mains transformer.	N/A
	– 1500 V r.m.s. or 2100 V peak for BASIC and SUPPLEMENTARY INSULATION (V) .....:		N/A
	– 3000 V r.m.s. or 4200 V peak for REINFORCED INSULATION (V) .....:		N/A
L.4.3	**Sampling tests conducted using twisted pair samples (IEC 60851-5:1996, clause 4.4.1).....:**	Approved TIW is used in mains transformer.	N/A
	Minimum breakdown test voltage at least twice the voltage in Tables 6 and 7 but not less than:		N/A
	– 3000 V r.m.s. or 4200 V peak for BASIC and SUPPLEMENTARY INSULATION ..... :		N/A

IEC 60601-1			
Clause	Requirement + Test	Result - Remark	Verdict
	– 6000 V r.m.s. or 8400 V peak for REINFORCED INSULATION ..... :		N/A

IEC 60601-1			
Clause	Requirement + Test	Result - Remark	Verdict

4.2.2	**RM RESULTS TABLE: General requirements for RISK MANAGEMENT**	N/A

4.3	**TABLE: ESSENTIAL PERFORMANCE**	N/A

4.5	**RM RESULTS TABLE: Equivalent Safety for ME Equipment of ME System**	N/A

4.6	**RM RESULTS TABLE: ME Equipment or system parts contacting the patient**	N/A

4.7	**RM RESULTS TABLE: Single Fault Condition for ME Equipment**	N/A

4.8	**RM RESULTS TABLE: Components of ME Equipment**	N/A

4.9	**RM RESULTS TABLE: Use of components with high-integrity characteristics**	N/A

IEC 60601-1			
Clause	Requirement + Test	Result - Remark	Verdict

4.11	TABLE: Power Input				P
Operating Conditions / Ratings	**Voltage (V)**	**Frequency (Hz)**	**Current (A)**	**Power (W ~~or VA~~)**	**Power factor (cos φ)**
Model: GTM96180-1807-2.0-T2					
Normal condition	90	50/60	0.4062	22.64	<0.9
Normal condition	100	50/60	0.3675	22.27	<0.9
Normal condition	240	50/60	0.1901	21.95	<0.9
Normal condition	264	50/60	0.1758	22.18	<0.9
Model: GTM96180-1817.9-5.9-T2					
Normal condition	90	50/60	0.3974	22.13	<0.9
Normal condition	100	50/60	0.3647	21.86	<0.9
Normal condition	240	50/60	0.1859	21.35	<0.9
Normal condition	264	50/60	0.1731	21.52	<0.9
Model: GTM96180-1838-2.0-T2					
Normal condition	90	50/60	0.3851	21.35	<0.9
Normal condition	100	50/60	0.3530	21.11	<0.9
Normal condition	240	50/60	0.1806	20.55	<0.9
Normal condition	264	50/60	0.1653	20.61	<0.9
Model: GTM96180-1848-T2					
Normal condition	90	50/60	0.3794	20.94	<0.9
Normal condition	100	50/60	0.3481	20.69	<0.9
Normal condition	240	50/60	0.1774	20.26	<0.9
Normal condition	264	50/60	0.1648	20.41	<0.9
Model: GTM96300-2307.5-2.5-R3A					
Normal condition	90	50/60	0.5931	31.03	<0.9
Normal condition	100	50/60	0.5285	30.53	<0.9
Normal condition	240	50/60	0.2643	30.59	<0.9
Normal condition	264	50/60	0.2332	30.71	<0.9
Model: GTM96300-3614.5-2.5-R3A					
Normal condition	90	50/60	0.8171	43.36	<0.9

IEC 60601-1			
Clause	Requirement + Test	Result - Remark	Verdict

4.11	TABLE: Power Input					P
Operating Conditions / Ratings		**Voltage (V)**	**Frequency (Hz)**	**Current (A)**	**Power (W ~~or VA~~)**	**Power factor (cos φ)**
Normal condition		100	50/60	0.7227	42.68	<0.9
Normal condition		240	50/60	0.3547	42.07	<0.9
Normal condition		264	50/60	0.3133	41.93	<0.9
Model: GTM96300-3624-R3A						
Normal condition		90	50/60	0.8007	42.30	<0.9
Normal condition		100	50/60	0.7162	41.84	<0.9
Normal condition		240	50/60	0.3407	40.80	<0.9
Normal condition		264	50/60	0.3109	40.86	<0.9
Model: GTM96300-3648-R3A						
Normal condition		90	50/60	0.7682	41.46	<0.9
Normal condition		100	50/60	0.6849	41.03	<0.9
Normal condition		240	50/60	0.3343	39.91	<0.9
Normal condition		264	50/60	0.3019	39.86	<0.9
Model: GTM91120-2007.5-2.5-T2						
Normal condition		90	50/60	0.52	27.0	<0.9
Normal condition		100	50/60	0.47	26.2	<0.9
Normal condition		240	50/60	0.24	26.1	<0.9
Normal condition		264	50/60	0.22	26.1	<0.9
Model: GTM91120-3014.5-2.5-T2						
Normal condition		90	50/60	0.70	36.1	<0.9
Normal condition		100	50/60	0.64	35.7	<0.9
Normal condition		240	50/60	0.32	35.0	<0.9
Normal condition		264	50/60	0.29	35.1	<0.9
Model: GTM91120-3024-T3A						
Normal condition		90	50/60	0.65	35.0	<0.9
Normal condition		100	50/60	0.59	34.6	<0.9
Normal condition		240	50/60	0.30	33.8	<0.9
Normal condition		264	50/60	0.28	33.6	<0.9

IEC 60601-1			
Clause	Requirement + Test	Result - Remark	Verdict

4.11	TABLE: Power Input					P
Operating Conditions / Ratings		**Voltage (V)**	**Frequency (Hz)**	**Current (A)**	**Power (W ~~or VA~~)**	**Power factor (cos φ)**
Model: GTM91120-3048-T2						
Normal condition		90	50/60	0.66	35.2	<0.9
Normal condition		100	50/60	0.61	34.9	<0.9
Normal condition		240	50/60	0.30	33.6	<0.9
Normal condition		264	50/60	0.28	34.2	<0.9
Supplementary Information:						

5.1	RM RESULTS TABLE: Type Tests		N/A
Clause of ISO 14971	**Document Ref. in RMF (Document No. & paragraph)**	**Result - Remarks**	**Verdict**
4.2			
4.3			
4.4			

5.9.2	TABLE: Determination of ACCESSIBLE parts	P
Location	**Determination method (NOTE1)**	**Comments**
Enclosure	Test finger, test hook	Can’t insert
Supplementary information: NOTE 1 - The determination methods are: visual; rigid test finger; jointed test finger; test hook.		

IEC 60601-1			
Clause	Requirement + Test	Result - Remark	Verdict

7.1.2	TABLE: Legibility of Marking		P
Markings tested	**Ambient Illuminance (lx)**	**Remarks**	
Outside Markings (Clause 7.2) .....:	100-1500 lx	Clearly legible	
Inside Markings (Clause 7.3) .....:	-	N/A	
Controls & Instruments (Clause 7.4).....:	-	N/A	
Safety Signs (Clause 7.5).....:	-	N/A	
Symbols (Clause 7.6) .....:	-	N/A	
Supplementary information: Observer, with a visual acuity of 0 on the log Minimum Angle of Resolution (log MAR) scale or 6/6 (20/20) and is able to read N6 of the Jaeger test card in normal room lighting condition (~500lx), reads marking at ambient illuminance least favourable level in the range of 100 lx to 1,500 lx. The ME EQUIPMENT or its part was positioned so that the viewpoint was the intended position of the OPERATOR or if not defined at any point within the base of a cone subtended by an angle of 30° to the axis normal to the centre of the plane of the marking and at a distance of 1 m.			

7.1.3	TABLE: Durability of marking test	P
Characteristics of the Marking Label tested:		**Remarks**
Material of Marking Label .....:	See Table 8.10	Pass
Ink/other printing material or process.....:	See Table 8.10	Pass
Material (composition) of Warning Label .....:	-	N/A
Ink/other printing material or process.....:	-	N/A
Other.....:	-	N/A
Supplementary information: Marking rubbed by hand, first for 15 s with a cloth rag soaked with distilled water, then for 15 s with a cloth rag soaked with ethanol 96%, and then for 15 s with a cloth rag soaked with isopropyl alcohol.		

7.2.2	RM RESULTS TABLE: Identification	N/A

7.2.13	RM RESULTS TABLE: Physiological effects (safety signs and warning)	N/A

7.2.17	RM RESULTS TABLE: Protective packaging	N/A

7.3.3	RM RESULTS TABLE: Batteries	N/A

IEC 60601-1			
Clause	Requirement + Test	Result - Remark	Verdict

7.3.7	**RM RESULTS TABLE: Supply terminals**	**N/A**

7.4.2	**RM RESULTS TABLE: Control devices**	**N/A**

7.5	**RM RESULTS TABLE: Safety signs**	**N/A**

7.9.2.4	**RM RESULTS TABLE: Electrical power source**	**N/A**

7.9.3.2	**RM RESULTS TABLE: Replacement of fuses, power supply cords, other parts**	**N/A**

8.1 b	**RM RESULTS TABLE: Fundamental rule of protection against electric shock - accidental detachment of conductors and connectors**	**N/A**

8.4.2	**TABLE: TABLE: Working Voltage / Power Measurement**	**P**

Test supply voltage/frequency (V/Hz)[1] ..... : 264V / 60Hz

Location From/To	Measured values					Remarks
	Vrms	Vpk or Vdc	Peak-to-peak ripple[2]	Power W/VA	Energy (J)	
Transformer, primary to secondary	Max. 240Vrms	--	--	--	--	For all models
Optocoupler primary to secondary	Max. 240Vrms	--	--	--	--	For all models
Y capacitor primary to secondary	Max. 240Vrms	--	--	--	--	For all models
Secondary output connector	--	<60Vdc	<10%	--	--	For all models

Supplementary Information:

1. The input supply voltage to the ME EQUIPMENT was the RATED voltage or the voltage within the RATED voltage range which results in the highest measured value. See clause 8.5.4.
2. If the d.c peak-to-peak ripple >10%, waveform considered as a.c. See clause 8.4.2.2

IEC 60601-1			
Clause	Requirement + Test	Result - Remark	Verdict

8.4.3	**TABLE: ME EQUIPMENT for connection to a power source by a plug - measurement of voltage or calculation of stored charge 1 s after disconnection of plug from mains supply**	**P**

Maximum allowable voltage (V).....:	**60**									
Voltage measured (V)										
Voltage Measured Between:	**1**	**2**	**3**	**4**	**5**	**6**	**7**	**8**	**9**	**10**
Plug pins 1 and 2	**6**	**5**	**6**	**5**	**5**	**6**	**5**	**5**	**6**	**5**
Plug pin 1 and plug earth pin	--	--	--	--	--	--	--	--	--	--
Plug pin 2 and plug earth pin	--	--	--	--	--	--	--	--	--	--
Plug pin 1 and enclosure	--	--	--	--	--	--	--	--	--	--
Plug pin 2 and enclosure	--	--	--	--	--	--	--	--	--	--
Maximum allowable stored charge when measured voltage exceeded 60 v (μc).....:	**45**									
Calculated stored charge (μc)										
Voltage Measured Between:	**1**	**2**	**3**	**4**	**5**	**6**	**7**	**8**	**9**	**10**
Plug pins 1 and 2	--	--	--	--	--	--	--	--	--	--
Plug pin 1 and plug earth pin	--	--	--	--	--	--	--	--	--	--
Plug pin 2 and plug earth pin	--	--	--	--	--	--	--	--	--	--
Plug pin 1 and enclosure	--	--	--	--	--	--	--	--	--	--
Plug pin 2 and enclosure	--	--	--	--	--	--	--	--	--	--
Supplementary information:										

IEC 60601-1			
Clause	Requirement + Test	Result - Remark	Verdict

8.4.4	**TABLE: Internal capacitive circuits – measurement of residual voltage or calculation of the stored charge in capacitive circuits (i.e., accessible capacitors or circuit parts) after de-energizing ME EQUIPMENT**	**N/A**

Maximum allowable residual voltage (V):	**60 V**
Maximum allowable stored charge when residual voltage exceeded 60 V :	**45 μC**

Description of the capacitive circuit (i.e., accessible capacitor or circuit parts)	Measured residual voltage (V)	Calculated stored charge (μC)	Remarks

Supplementary information:

8.5.2.2	**RM RESULTS TABLE: Type B applied parts**	**N/A**

8.5.2.3	**RM RESULTS TABLE: PATIENT Leads**	**N/A**

8.5.5.1a	**TABLE: defibrillation-proof applied parts – measurement of hazardous electrical energies**	**N/A**

8.5.5.1b	**TABLE: defibrillation-proof applied parts – verification of recovery time**	**N/A**

8.5.5.2	**TABLE: DEFIBRILLATION-PROOF APPLIED PARTS or PATIENT CONNECTIONS of DEFIBRILLATION-PROOF APPLIED PARTS - Energy reduction test –measurement of Energy delivered to a 100 Ω load**	**N/A**

8.6.3	**RM RESULTS TABLE: Protective earthing of moving parts**	**N/A**

IEC 60601-1			
Clause	Requirement + Test	Result - Remark	Verdict

8.6.4	TABLE: Impedance and current-carrying capability of PROTECTIVE EARTH CONNECTIONS				P
Type of ME EQUIPMENT & impedance measured between parts	**Test current (A) /Duration (s)**	**Voltage drop measured between parts (V)**	**Maximum calculated impedance (mΩ)**	**Maximum allowable impedance (mΩ)**	
PERMANENTLY INSTALLED ME EQUIPMENT, impedance between PROTECTIVE EARTH TERMINAL and a PROTECTIVELY EARTHED part	--	--	--	100	
ME EQUIPMENT with an APPLIANCE INLET, impedance between earth pin in the APPLIANCE INLET and a PROTECTIVELY EARTHED part	25A/ 10s 40A/ 60s	0.4 0.8	13 20	100	
ME EQUIPMENT with a non-DETACHABLE POWER SUPPLY CORD, impedance between the protective earth pin in the MAINS PLUG and a PROTECTIVELY EARTHED part	--	--	--	200	

Supplementary information:

PERMANENTLY INSTALLED ME EQUIPMENT, impedance between PROTECTIVE EARTH TERMINAL and a PROTECTIVELY EARTHED part - Limit 100 mΩME EQUIPMENT with an APPLIANCE INLET, impedance between earth pin in the APPLIANCE INLET and a PROTECTIVELY EARTHED part - Limit 100 mΩ

ME EQUIPMENT with an APPLIANCE INLET, impedance between earth pin in the protective earth pin on the DETACHABLE POWER SUPPLY CORD and a PROTECTIVELY EARTHED part - Limit 200 mΩ

ME EQUIPMENT with a non-DETACHABLE POWER SUPPLY CORD, impedance between the protective earth pin in the MAINS PLUG and a PROTECTIVELY EARTHED part - Limit 200 mΩ

IEC 60601-1			
Clause	Requirement + Test	Result - Remark	Verdict

8.7	TABLE: leakage current				P
Type of leakage current and test condition (including single faults)	**Supply voltage (V)**	**Supply frequency (Hz)**	**Measured max. value (μA)**	**Remarks**	
GTM91120 (desktop and direct plug-in model)					
Fig. 13 - Earth Leakage (ER)	—	—	—	Maximum allowed values: 5 mA NC; 10 mA SFC	
NC, S1=1, S5=0	264	60	48 μA AC	For Class I model, with frequency-weighted device	
NC, S1=1, S5=1	264	60	48 μA AC		
SFC, S1=0, S5=0	264	60	55 μA AC		
B, SFC, S1=0, S5=1	264	60	54 μA AC		
NC, S1=1, S5=0	264	60	102μA AC	For Class I model, with Not-frequency-weighted device	
NC, S1=1, S5=1	264	60	102μA AC		
SFC, S1=0, S5=0	264	60	123μA AC		
B, SFC, S1=0, S5=1	264	60	118μA AC		
Fig. 14 - Touch Current (TC)	—	—	—	Maximum allowed values: 100 μA NC; 500 μA SFC	
NC, S1=1, S5=1, S7=1	264	60	<10μA AC	With frequency-weighted device	
NC, S1=1, S5=0, S7=1	264	60	<10μA AC		
SFC, S1=0, S5=1, S7=1	264	60	<10μA AC		
SFC, S1=0, S5=0, S7=1	264	60	<10μA AC		
SFC, S1=1, S5=1, S7=0	264	60	<10μA AC		
SFC, S1=1, S5=0, S7=0	264	60	<10μA AC		
NC, S1=1, S5=1, S7=1	264	60	12.4μA AC	With Not-frequency-weighted device	
NC, S1=1, S5=0, S7=1	264	60	12.3μA AC		
SFC, S1=0, S5=1, S7=1	264	60	113.3μA AC		
SFC, S1=0, S5=0, S7=1	264	60	113.5μA AC		
SFC, S1=1, S5=1, S7=0	264	60	132.7μA AC		
SFC, S1=1, S5=0, S7=0	264	60	131.4μA AC		
GTM91120 (Open frame and encapsulated model)					
Fig. 13 - Earth Leakage (ER)	—	—	—	Maximum allowed values: 5 mA NC; 10 mA SFC	
NC, S1=1, S5=0	264	60	48 μA AC	For Class I model, with frequency-weighted device	
NC, S1=1, S5=1	264	60	48 μA AC		
SFC, S1=0, S5=0	264	60	55 μA AC		

IEC 60601-1					
Clause	Requirement + Test			Result - Remark	Verdict
SFC, S1=0, S5=1	264	60	54 μA AC		
NC, S1=1, S5=0	264	60	102μA AC	For Class I model, with Not-frequency-weighted device	
NC, S1=1, S5=1	264	60	102μA AC		
SFC, S1=0, S5=0	264	60	123μA AC		
SFC, S1=0, S5=1	264	60	118μA AC		
Fig. 14 - Touch Current (TC)	—	—	—	Maximum allowed values: 100 μA NC; 500 μA SFC	
MD was connected between Neutral and output(worse case in V+ and V-)					
NC, S1=1, S5=1, S7=1	264	60	45 μA AC	With frequency-weighted device	
NC, S1=1, S5=0, S7=1	264	60	45 μA AC		
SFC, S1=0, S5=1, S7=1	264	60	77 μA AC		
SFC, S1=0, S5=0, S7=1	264	60	76 μA AC		
SFC, S1=1, S5=1, S7=0	264	60	44 μA AC		
SFC, S1=1, S5=0, S7=0	264	60	45 μA AC		
NC, S1=1, S5=1, S7=1	264	60	72μA AC	With Not-frequency-weighted device	
NC, S1=1, S5=0, S7=1	264	60	72μA AC		
SFC, S1=0, S5=1, S7=1	264	60	144μA AC		
SFC, S1=0, S5=0, S7=1	264	60	148μA AC		
SFC, S1=1, S5=1, S7=0	264	60	177μA AC		
SFC, S1=1, S5=0, S7=0	264	60	176μA AC		
GTM96180 series (desktop model)					
Fig. 13 - Earth Leakage (ER)	—	—	—	Maximum allowed values: 5 mA NC; 10 mA SFC	
NC, S1=1, S5=0	264	60	50.5μA AC	For Class I model, with frequency-weighted device	
NC, S1=1, S5=1	264	60	52.1μA AC		
SFC, S1=0, S5=0	264	60	69.8μA AC		
SFC, S1=0, S5=1	264	60	69.7μA AC		
NC, S1=1, S5=0	264	60	119μA AC	For Class I model, with Not-frequency-weighted device	
NC, S1=1, S5=1	264	60	121μA AC		
SFC, S1=0, S5=0	264	60	133μA AC		
SFC, S1=0, S5=1	264	60	141μA AC		
			—	Maximum allowed values: 100 μA NC; 500 μA SFC	
NC, S1=1, S5=1, S7=1	264	60	<10μA AC	With frequency-weighted device	
NC, S1=1, S5=0, S7=1	264	60	<10μA AC		
SFC, S1=0, S5=1, S7=1	264	60	<10μA AC		
SFC, S1=0, S5=0, S7=1	264	60	<10μA AC		

IEC 60601-1				
Clause	Requirement + Test		Result - Remark	Verdict

SFC, S1=1, S5=1, S7=0	264	60	<10μA AC	
SFC, S1=1, S5=0, S7=0	264	60	<10μA AC	
NC, S1=1, S5=1, S7=1	264	60	12.7μA AC	With Not-frequency-weighted device
NC, S1=1, S5=0, S7=1	264	60	12.3μA AC	
SFC, S1=0, S5=1, S7=1	264	60	117.2μA AC	
SFC, S1=0, S5=0, S7=1	264	60	117.5μA AC	
SFC, S1=1, S5=1, S7=0	264	60	122.5μA AC	
SFC, S1=1, S5=0, S7=0	264	60	121.9μA AC	
GTM96180 series (direct plug-in model)				
Fig. 13 - Earth Leakage (ER)	—	—	—	Maximum allowed values: 5 mA NC; 10 mA SFC
NC, S1=1, S5=0	264	60	52.4μA AC	For Class I model, with frequency-weighted device
NC, S1=1, S5=1	264	60	55.1μA AC	
SFC, S1=0, S5=0	264	60	72.0μA AC	
SFC, S1=0, S5=1	264	60	71.9μA AC	
NC, S1=1, S5=0	264	60	121μA AC	For Class I model, with Not-frequency-weighted device
NC, S1=1, S5=1	264	60	125μA AC	
SFC, S1=0, S5=0	264	60	131μA AC	
SFC, S1=0, S5=1	264	60	134μA AC	
Fig. 14 - Touch Current (TC)	—	—	—	Maximum allowed values: 100 μA NC; 500 μA SFC
NC, S1=1, S5=1, S7=1	264	60	<10μA AC	With frequency-weighted device
NC, S1=1, S5=0, S7=1	264	60	<10μA AC	
SFC, S1=0, S5=1, S7=1	264	60	<10μA AC	
SFC, S1=0, S5=0, S7=1	264	60	<10μA AC	
SFC, S1=1, S5=1, S7=0	264	60	<10μA AC	
SFC, S1=1, S5=0, S7=0	264	60	<10μA AC	
NC, S1=1, S5=1, S7=1	264	60	16.9μA AC	With Not-frequency-weighted device
NC, S1=1, S5=0, S7=1	264	60	16.7μA AC	
SFC, S1=0, S5=1, S7=1	264	60	137.2μA AC	
SFC, S1=0, S5=0, S7=1	264	60	137.4μA AC	
SFC, S1=1, S5=1, S7=0	264	60	142.5μA AC	

IEC 60601-1				
Clause	Requirement + Test		Result - Remark	Verdict

SFC, S1=1, S5=0, S7=0	264	60	141.6μA AC	
GTM96300 series				
Fig. 13 - Earth Leakage (ER)	—	—	—	Maximum allowed values: 5 mA NC; 10 mA SFC
NC, S1=1, S5=0	264	60	45.2μA AC	For Class I model, with frequency-weighted device
NC, S1=1, S5=1	264	60	41.1μA AC	
SFC, S1=0, S5=0	264	60	84.2μA AC	
B, SFC, S1=0, S5=1	264	60	82.1μA AC	
NC, S1=1, S5=0	264	60	115.6μA AC	For Class I model, with Not-frequency-weighted device
NC, S1=1, S5=1	264	60	111.1μA AC	
SFC, S1=0, S5=0	264	60	124.2μA AC	
B, SFC, S1=0, S5=1	264	60	122.7μA AC	
Fig. 14 - Touch Current (TC)	—	—	—	Maximum allowed values: 100 μA NC; 500 μA SFC
NC, S1=1, S5=1, S7=1	264	60	<10μA AC	With frequency-weighted device
NC, S1=1, S5=0, S7=1	264	60	<10μA AC	
SFC, S1=0, S5=1, S7=1	264	60	<10μA AC	
SFC, S1=0, S5=0, S7=1	264	60	<10μA AC	
SFC, S1=1, S5=1, S7=0	264	60	<10μA AC	
SFC, S1=1, S5=0, S7=0	264	60	<10μA AC	
NC, S1=1, S5=1, S7=1	264	60	19.4μA AC	With Not-frequency-weighted device
NC, S1=1, S5=0, S7=1	264	60	18.4μA AC	
SFC, S1=0, S5=1, S7=1	264	60	147.2μA AC	
SFC, S1=0, S5=0, S7=1	264	60	147.3μA AC	
SFC, S1=1, S5=1, S7=0	264	60	156.4μA AC	
SFC, S1=1, S5=0, S7=0	264	60	151.2μA AC	

Supplementary information:

Note 1: For EARTH LEAKAGE CURRENT see 8.7.3 d) and 8.7.4.5;
Note 2: For TOUCH CURRENT see 8.7.3 c) and 8.7.4.6;

Note 3: For PATIENT LEAKAGE CURRENT SEE 8.7.3.b) and 8.7.4.7
Note 4: Total PATIENT LEAKAGE CURRENT values are only relative to equipment with multiple APPLIED PARTS of the same type. See 8.7.4.7 h). The individual APPLIED PARTS complied with the PATIENT LEAKAGE CURRENT values.

IEC 60601-1			
Clause	Requirement + Test	Result - Remark	Verdict

Note 5: In addition to conditions indicated in the Table, tests conducted at operating temperature and after humidity preconditioning of 5.7, EQUIPMENT energized in stand-by condition and fully operating, max rated supply frequency, at 110 % of the max RATED MAINS VOLTAGE, and after relevant tests of Clause 11.6 (i.e., overflow, spillage, leakage, ingress of water and particulate matter, cleaning & disinfection, & sterilization).	
ER - Earth leakage current TC – Touch current MD - Measuring device	1 - Switch closed or set to normal polarity 0 - Switch open or set to reversed polarity NC - Normal condition SFC - Single fault condition

IEC 60601-1			
Clause	Requirement + Test	Result - Remark	Verdict

8.8.3	TABLE: Dielectric strength test of solid insulating materials with safety function – MEANS OF OPERATOR PROTECTION (MOOP) / MEANS OF PATIENT PROTECTION (MOPP)				P
Insulation under test (area from insulation diagram)	**Insulation Type (1 or 2 MOOP/MOPP)**	**Reference Voltage**		**A.C. test voltages in V r.m.s[1]**	**Dielectric breakdown after 1 minute Yes/No[2]**
		PEAK WORKING VOLTAGE (U) V_{peak}	**PEAK WORKING VOLTAGE (U) V d.c.**		
B (Plug pin-out on the connector side to accessible part)	**2MOOP**	**240**	**340**	**3000**	No breakdown
C (Mains part plug portion to outer enclosure)	**2MOOP**	**240**	**340**	**3000**	No breakdown
D (Internal mains part to accessible outer enclosure)	**2MOOP**	**240**	**340**	**3000**	No breakdown
E (Mains part to secondary circuits) (Optocoupler)	**2MOPP**	**240**	**--**	**4000**	No breakdown
F (Mains part to secondary circuits)	**2MOPP**	**240**	**--**	**4000**	No breakdown
G (Mains part to secondary circuits) (Y capacitor x 2)	**MOPP (Each) x 2**	**240**	**--**	**4000**	No breakdown
H (Mains part to secondary circuits) (Along PCB trace)	**2MOPP**	**240**	**--**	**4000**	No breakdown
J(Line/Neutral to PE terminal trace)	**MOPP**	**240**	**--**	**4000**	No breakdown

Supplementary information:

[1] Alternatively, per the Table (i.e., __dc), a d.c. test voltage equal to the peak value of the a.c. test voltage used.
[2] A) Immediately after humidity treatment of 5.7, ME EQUIPMENT de-energized, B) after required sterilization PROCEDURE, ME EQUIPMENT de-energized, C) after reaching steady state operating temperature as during heating test of 11.1.1, and D) after relevant tests of 11.6 (i.e., overflow, spillage, leakage, ingress of water, cleaning, disinfection, and sterilization).

8.8.4.1	TABLE: Resistance to heat - Ball pressure test of thermoplastic parts		P
	Allowed impression diameter (mm) ..... :	**≤ 2 mm**	—
	Force (N) ..... :	**20**	—

Part/material	**Test temperature (°C)**	**Impression diameter (mm)**
Enclosure		
SE1X	125	1.4

IEC 60601-1			
Clause	Requirement + Test	Result - Remark	Verdict

SE1	125	1.4
SE100	125	1.4
C2950	125	1.4
CX7211	125	1.4
EXCY0098	125	1.3
945	125	1.3
HF500R	125	1.4
LN-1250P	125	1.3
LN-1250G	125	1.3
Bobbin of Mains transformer		
T375J	125	1.3
T375HF	125	1.2
4130	125	1.3
PM-9820	125	1.4
CP-J-8800	125	1.4
Supplementary information: Approved materials are used. Refer to list of safety critical components.		

8.8.4.1	**RM RESULTS TABLE: Mechanical strength and resistance to heat**	**N/A**

8.9.2	**TABLE: Short circuiting of each single one of the CREEPAGE DISTANCES and AIR CLEARANCES for insulation in the MAINS PART between parts of opposite polarity in lieu of complying with the required measurements in 8.9.4**	**N/A**

Specific areas of circuits short-circuited and test conditions	Test in lieu of CREEPAGE DISTANCE or AIR CLEARANCE[1]	HAZARDOUS SITUATION observed (i.e., fire hazard, shock hazard, explosion, discharge of parts, etc.)? Yes/No	Remarks
--	--	--	--

Supplementary information:
Note 1: AC - AIR CLEARANCE CD - CREEPAGE DISTANCE

IEC 60601-1			
Clause	Requirement + Test	Result - Remark	Verdict

8.9.3.2	Table: Thermal cycling tests on one sample of insulating compound forming solid insulation between conductive parts		N/A
Test Sequence No.	**Each test duration and temperature**	**Dielectric test voltage (V = Test voltage in 8.8.3 times 1.6)**	**Dielectric strength test after humidity preconditioning per cl. 5.7 except for 48 h only, Breakdown: Yes/No**
1	68 h at T1 ± 2 °C = ___°C [1]		
	1 h at 25 °C ± 2 °C		
	2 h at 0 °C ± 2 °C		
	1 or more h at 25 °C ± 2 °C		
2	68 h at T1 ± 2 °C = ___°C [1]		
	1 h at 25 °C ± 2 °C		
	2 h at 0 °C ± 2 °C		
	1 or more h at 25 °C ± 2 °C		
3	68 h at T1 ± 2 °C = ___°C [1]		
	1 h at 25 °C ± 2 °C		
	2 h at 0 °C ± 2 °C		
	1 or more h at 25 °C ± 2 °C		
4	68 h at T1 ± 2 °C = ___°C [1]		
	1 h at 25 °C ± 2 °C		
	2 h at 0 °C ± 2 °C		
	1 or more h at 25 °C ± 2 °C		

Supplementary information:

[1] T1 = 10 °C above the maximum temperature of relevant part determined per 11.1.1, or 85 °C, the higher of the two. 10 °C not added to T1 when temperature measured by an embedded thermocouple. Used gradual transition from one temperature to another.

IEC 60601-1			
Clause	Requirement + Test	Result - Remark	Verdict

8.9.3.4	Table: Thermal cycling tests on one sample of cemented joint (see 8.9.3.3)		N/A
Test Sequence No.	**Each test duration and temperature**	**Dielectric test voltage (V = Test voltage in 8.8.3 times 1.6)**	**Dielectric strength test after humidity preconditioning per cl. 5.7 except for 48 h only, Breakdown: Yes/No**
1	**68 h at T1 ± 2 °C = ___°C[1]**		
	1 h at 25 °C ± 2 °C		
	2 h at 0 °C ± 2 °C		
	1 or more h at 25 °C ± 2 °C		
2	**68 h at T1 ± 2 °C = ___°C[1]**		
	1 h at 25 °C ± 2 °C		
	2 h at 0 °C ± 2 °C		
	1 or more h at 25 °C ± 2 °C		
3	**68 h at T1 ± 2 °C = ___°C[1]**		
	1 h at 25 °C ± 2 °C		
	2 h at 0 °C ± 2 °C		
	1 or more h at 25 °C ± 2 °C		
4	**68 h at T1 ± 2 °C = ___°C[1]**		
	1 h at 25 °C ± 2 °C		
	2 h at 0 °C ± 2 °C		
	1 or more h at 25 °C ± 2 °C		

Supplementary information:

[1] T1 = 10 °C above the maximum temperature of relevant part determined per 11.1.1, or 85 °C, the higher of the two. 10 °C not added to T1 when temperature measured by an embedded thermocouple. Used gradual transition from one temperature to another.

IEC 60601-1			
Clause	Requirement + Test	Result - Remark	Verdict

8.10	TABLE: List of critical components					P
Object/part No.	Manufacturer/ trademark	Type/model	Technical data	Standard (Edition / year)	Mark(s) of conformity[1])	
PCB	WALEX ELECTRONIC (WUXI) CO LTD	T2 T2A T2B T4	Min. 1,6 mm thickness, min. V-0, 130°C	IEC 60601-1 UL 796	Tested with appliance UL E154355	
Alt. use	DONGGUAN HE TONG ELECTRONICS CO LTD	CEM1 2V0 FR4	Min. 1,6 mm thickness, min. V-0, 130°C	IEC 60601-1 UL 796	Tested with appliance UL E243157	
Alt. use	CHEERFUL ELECTRONIC (HK) LTD	02 03 03A	Min. 1,6 mm thickness, min. V-0, 130°C	IEC 60601-1 UL 796	Tested with appliance UL E199724	
Alt. use	DONGGUAN DAYSUN ELECTRONIC CO LTD	DS2	Min. 1,6 mm thickness, min. V-0, 130°C	IEC 60601-1 UL 796	Tested with appliance UL E251754	
Alt. use	SUZHOU CITY YILIHUA ELECTRONICS CO LTD	YLH-1	Min. 1,6 mm thickness, min. V-0, 130°C	IEC 60601-1 UL 796	Tested with appliance UL E251781	
Alt. use	SHANGHAI AREX PRECISION ELECTRONIC CO LTD	02V0 04V0	Min. 1,6 mm thickness, min. V-0, 130°C	IEC 60601-1 UL 796	Tested with appliance UL E186016	
Alt. use	BRITE PLUS ELECTRONICS (SUZHOU) CO LTD	DKV0-3A DGV0-3A	Min. 1,6 mm thickness, min. V-0, 130°C	IEC 60601-1 UL 796	Tested with appliance UL E177671	
Alt. use	KUOTIANG ENT LTD	C-2 C-2A	Min. 1,6 mm thickness, min. V-0, 130°C	IEC 60601-1 UL 796	Tested with appliance UL E227299	
Alt. use	SHENZHEN TONGCHUANGXIN ELECTRONICS CO LTD	TCX	Min. 1,6 mm thickness, min. V-0, 130°C	IEC 60601-1 UL 796	Tested with appliance UL E250336	
Alt. use	PACIFIC WIN INDUSTRIAL LTD	PW-02 PW-03	Min. 1,6 mm thickness, min. V-0, 130°C	IEC 60601-1 UL 796	Tested with appliance UL E228070	
Alt. use	YUANMAN PRINTED CIRCUIT CO LTD	1V0	Min. 1,6 mm thickness, min. V-0, 130°C	IEC 60601-1 UL 796	Tested with appliance UL E74757	

IEC 60601-1			
Clause	Requirement + Test	Result - Remark	Verdict

Alt. use	SUZHOU XINKE ELECTRONICS CO LTD	XK-2, XK-3	Min. 1,6 mm thickness, min. V-0, 130°C	IEC 60601-1 UL 796	Tested with appliance UL E231590
Alt. use	KUNSHAN CITY HUA SHENG CIRCUIT BOARD CO LTD	HS-S	Min. 1,6 mm thickness, min. V-0, 130°C	IEC 60601-1 UL 796	Tested with appliance UL E229877
Alt. use	JIANGSU DIFEIDA ELECTRONICS CO LTD	DFD-1	Min. 1,6 mm thickness, min. V-0, 130°C	IEC 60601-1 UL 796	Tested with appliance UL E213009
Alt. use	HUIZHOU SHUNJIA ELECTRONICS CO LTD	SJ-B	Min. 1,6 mm thickness, min. V-0, 130°C	IEC 60601-1 UL 796	Tested with appliance UL E320884
Fuse (F1,F2) (F2 is optional)	Conquer Electronics Co., Ltd.	MST series	T1.6A, 250V(for GTM96180 series); T3.15A, 250V(for GTM96300,91120,91128 series)	IEC 60127-1 IEC 60127-3 UL 248-1 UL 248-14	VDE 40017118 UL E82636
Alt. use	Ever Island Electric Co., Ltd. And Walter Electric	2010, ICP	T1.6A, 250V(for GTM96180 series); T3.15A, 250V(for GTM96300,91120,91128 series)	IEC 60127-1 IEC 60127-3 UL 248-1 UL 248-14	VDE 40018781 UL E220181
Alt. use	Bel Fuse Ltd.	RST-Serie(s)	T1.6A, 250V(for GTM96180 series); T3.15A, 250V(for GTM96300,91120,91128 series)	IEC 60127-1 IEC 60127-3 UL 248-1 UL 248-14	VDE 40011144 UL E20624
Alt. use	Cooper Bussmann LLC	SS-5	T1.6A, 250V(for GTM96180 series); T3.15A, 250V(for GTM96300,91120,91128 series)	IEC 60127-1 IEC 60127-3 UL 248-1 UL 248-14	VDE 40015513 UL E19180
Alt. use	Shenzhen Lanson Electronics Co. Ltd.	SMT	T1.6A, 250V(for GTM96180 series); T3.15A, 250V(for GTM96300,91120,91128 series)	IEC 60127-1 IEC 60127-3 UL 248-1 UL 248-14	VDE 40012592 UL E221465

IEC 60601-1			
Clause	Requirement + Test	Result - Remark	Verdict

Alt. use	Das & Sons International Ltd.	385T series	T1.6A, 250V(for GTM96180 series); T3.15A, 250V(for GTM96300,91120,91128 series)	IEC 60127-1 IEC 60127-3 UL 248-1 UL 248-14	VDE 40008524 UL E205718
Alt. use	Dongguan Better Electronics Technology Co., Ltd.	932	T1.6A, 250V(for GTM96180 series); T3.15A, 250V(for GTM96300,91120,91128 series)	IEC 60127-1 IEC 60127-3 UL 248-1 UL 248-14	VDE 40033369 UL E300003
Alt. use	Hollyland Company Limited	5ET	T1.6A, 250V(for GTM96180 series); T3.15A, 250V(for GTM96300,91120,91128 series)	IEC 60127-1 IEC 60127-3 UL 248-1 UL 248-14	VDE 40015669 UL E156471
Alt. use	Sunny East Enterprise Co. Ltd.	CFD-Serie(s)	T1.6A, 250V(for GTM96180 series); T3.15A, 250V(for GTM96300,91120,91128 series)	IEC 60127-1 IEC 60127-3 UL 248-1 UL 248-14	VDE 40030246 UL E133774
Alt. use	Conquer Electronics Co., Ltd.	MET series	T1.6A, 250V(for GTM96180 series); T3.15A, 250V(for GTM96300,91120,91128 series)	IEC 60127-1 IEC 60127-3 UL 248-1 UL 248-14	VDE 40017157 UL E82636
Alt. use	Zhongshan Lanbao Electrical Appliances Co., Ltd.	RTI-10 Serie(s)	T1.6A, 250V(for GTM96180 series); T3.15A, 250V(for GTM96300,91120,91128 series)	IEC 60127-1 IEC 60127-3 UL 248-1 UL 248-14	VDE 40017009 UL E213695
bridging resistor (optional)	TY-Ohm Suzhou Electronic Works Co. Ltd	RT	1W	UL 1676 UL 6500	VDE40031226 UL E321764
Alt.	Yageo Components(Suzhou) Co. Ltd	HHV	1W	UL 1676 UL 6500	VDE40031974 UL E333286
Y capacitor (CY1, CY2) (optional)	TDK-EPC Corporation, Capacitors Group Circuit Devices Business Group	CD	Y1, AC250V, max 2200pF, 25/085/21/B	IEC/EN 60384-14 UL 60384-14 UL 1414	UL E37861

IEC 60601-1			
Clause	Requirement + Test	Result - Remark	Verdict

Alt. use	Success Electronics Co., Ltd.	SE	Y1, AC250V, or AC500V, max 2200pF, 40/125/56/C	IEC/EN 60384-14 UL 60384-14 UL 1414	VDE 40037211 VDE 40020002 UL E114280
Alt. use	Success Electronics Co., Ltd.	SB	Y1, AC250V, max 2200pF, 40/125/56/C	IEC/EN 60384-14 UL 60384-14 UL 1414	VDE 40037221 VDE 40020001 UL E114280
Alt. use	Murata Mfg. Co., Ltd.	KX	Y1, AC250V, max 2200pF, 25/125/21/B	IEC/EN 60384-14 UL 60384-14 UL 1414	VDE 40002831 UL E37921
Alt. use	Walsin Technology Corp.	AH	Y1, AC250V, max 2200pF, 25/125/21/C	IEC/EN 60384-14 UL 60384-14 UL 1414	VDE 40001804 UL E146544
Alt. use	JYA-NAY Co., Ltd.	JN	Y1, AC250V, max 2200pF, 25/125/21/C	IEC/EN 60384-14 UL 60384-14 UL 1414	VDE 40001831 UL E201384
Alt. use	Haohua Electronic Co.	CT 7	Y1, AC250V, max 2200pF, 30/125/56/C	IEC/EN 60384-14 UL 60384-14 UL 1414	VDE 40003902 UL E233106
Alt. use	Jyh Chung Electronic Co., Ltd.	JD	Y1, AC250V, max 2200pF, 40/085/21/C	IEC/EN 60384-14 UL 60384-14 UL 1414	VDE 137027 UL E187963
Alt. use	Jerro Electronics Corp.	JX-series	Y1, AC250V, max 2200pF, 40/125/21/C	IEC/EN 60384-14 UL 60384-14 UL 1414	VDE 40032158 UL E333001
X capacitor (CX1) (optional)	Cheng Tung Industrial Co., Ltd.	CTX	Min. 300VAC, Max. 0.47μF,110 °C, X1 or X2	IEC/EN 60384-14 UL 60384-14 UL 1414	VDE 40022642 UL E193049
Alt. use	Tenta Electric Industrial Co. Ltd.	MEX	Min. 250VAC, Max. 0.47μF, 40/100/21/B, X1 or X2	IEC/EN 60384-14 UL 60384-14 UL 1414	VDE 119119 UL E222911

IEC 60601-1			
Clause	Requirement + Test	Result - Remark	Verdict

Alt. use	Joey Electronics (Dong Guan) Co., Ltd.	MPX	Min. 250VAC, Max. 0.47μF, 40/105/21/B, X1 or X2	IEC/EN 60384-14 UL 60384-14 UL 1414	VDE 40032481 UL E216807
Alt. use	Ultra Tech Xiphi Enterprise Co. Ltd.	HQX	Min. 250VAC, Max. 0.47μF, 40/100/21/C, X1 or X2	IEC/EN 60384-14 UL 60384-14 UL 1414	VDE 40015608 UL E183780
Alt. use	Yuon Yu Electronics Co. Ltd.	MPX	Min. 250VAC, Max. 0.47μF, 40/100/21/C, X1 or X2	IEC/EN 60384-14 UL 60384-14 UL 1414	VDE 40032392 UL E200119
Alt. use	Sinhua Electronics (Huzhou) Co., Ltd.	MPX	Min. 250VAC, Max. 0.47μF, 40/100/21/C, X1 or X2	IEC/EN 60384-14 UL 60384-14 UL 1414	VDE 40014686 UL E237560
Alt. use	Jiangsu Xinghua Huayu Electronics Co., Ltd.	MPX - Series	Min. 250VAC, Max. 0.47μF, 40/100/21/C, X1 or X2	IEC/EN 60384-14 UL 60384-14 UL 1414	VDE 40022417 UL E311166
Alt. use	Dain Electronics Co., Ltd.	MEX, MPX, NPX	Min. 250VAC, Max. 0.47μF, 40/100/21/C, X1 or X2	IEC/EN 60384-14 UL 60384-14 UL 1414	VDE 40018798 UL E147776
Alt. use	Shenzhen Jinghao Capacitor Co., Ltd.	CBB62B	Min. 250VAC, Max. 0.47μF, 40/110/56/B, X1 or X2	IEC/EN 60384-14 UL 60384-14 UL 1414	VDE 40018690 UL E252286
Photo coupler U2(for GTM91120)/U3	Everlight Electronics Co., Ltd.	EL817	Dti=0.5mm Int. , dcr=6.0mm EXT.dcr=7.7mm, thermal cycling test,110°C	IEC/EN 60747-5-2	VDE 132249
Alt. use	COSMO Electronics Corporation	K1010 / KP1010	Dti=0.6mm Int. , dcr=4.0mm EXT.dcr=5.0mm, thermal cycling test,115°C	IEC/EN 60747-5-2	VDE 101347

IEC 60601-1			
Clause	Requirement + Test	Result - Remark	Verdict

Alt. use	Lite-On Technology Corporation	LTV-817	Dti=0.8mm Int. , EXT.dcr=7.8mm, thermal cycling test,100°C	IEC/EN 60747-5-2	VDE 40015248
Alt. use	Fairchild Semiconductor Pte Ltd.	H11A817B / FOD817B	Insulation voltage: 850V; Transient overvoltage: 6000V; CTI175; Int. Cr/ Ext. Cr: ≥7,0/ 7,0 mm; 30/110/21	IEC/EN 60747-5-2	VDE 40026857
Alt. use	Sharp Corporation Electronic Components and Devices Group	PC817	Insulation voltage: 890V; Transient overvoltage: 9000V Int. Cr/ Ext. Cr: 7.62/ 7.62 mm; 30/100/21	IEC/EN 60747-5-2	VDE 40008087
Alt. use	Bright Led Electronics Corp.	BPC-817 A/B/C/D/L BPC-817 M BPC-817 S	Dti=0.4mm EXT.dcr=7.0mm, thermal cycling test,100°C	IEC/EN 60747-5-2	VDE 40007240
Alt. use	Toshiba Corporation Semiconductor & Storage Products Company	TLP781F	Dti > 0.4mm, Ext cr > 8.0mm, Isolation 3000Vac min., 110°C min., Thermal cycling test	IEC/EN 60747-5-2	VDE 40021173
Varistor MOV(for GTM91120)/MOV1 (Optional)	Thinking Electronic Industrial Co., Ltd.	TVR10471K, TVR14471K	Max. Continuous voltage: min 300Vac(rms), 85°C, The coating is V-0	IEC 61051-1 IEC 61051-2 IEC 61051-2-2	VDE 005944
Alt. use	Centra Science Corp.	10D471K, 14D471K	Max. Continuous voltage: min 300Vac(rms), 85°C, The coating is V-0	IEC 61051-1 IEC 61051-2 IEC 61051-2-2	VDE 4008220
Alt. use	Success Electronics Co., Ltd.	SVR10D471K SVR14D471K	Max. Continuous voltage: min 300Vac(rms), 85°C, The coating is V-0	IEC 61051-1 IEC 61051-2 IEC 61051-2-2	VDE 40030401
Alt. use	Walsin Technology Co., Ltd.	14D471K	Max. Continuous voltage: min 300Vac(rms), 85°C, The coating is V-0	IEC 61051-1 IEC 61051-2 IEC 61051-2-2	VDE 40010090

IEC 60601-1			
Clause	Requirement + Test	Result - Remark	Verdict

Alt. use	Lien Shun Electronics Co., Ltd.	14D471K	Max. Continuous voltage: min 300Vac(rms), 85°C, The coating is V-0	IEC 61051-1 IEC 61051-2 IEC 61051-2-2	VDE 40005858
Alt. use	Ceramate Techn. Co., Ltd.	GNR10D471K GNR14D471K	Max. Continuous voltage: min 300Vac(rms), 85°C, The coating is V-0	IEC 61051-1 IEC 61051-2 IEC 61051-2-2	VDE 40031745
Alt. use	Brightking (Shenzhen) Co., Ltd.	14D471K 10D471K	Max. Continuous voltage: min 300Vac(rms), 85°C, The coating is V-0	IEC 61051-1 IEC 61051-2 IEC 61051-2-2	VDE 40027827
Alt. use	Joyin Co., Ltd.	JVR10N471K JVR14N471K	Max. Continuous voltage: min 300Vac(rms), 85°C, The coating is V-0	IEC 61051-1 IEC 61051-2 IEC 61051-2-2	VDE 005937
Appliance inlet CON1 Class I units(C6 type)	Zhejiang LECI Electronics Co., Ltd.	DB-6	2.5A, 250Vac	IEC/EN 60320-1	VDE 40032465
Alt. use	Rich Bay Co., Ltd.	R-30790	2.5A, 250Vac	IEC/EN 60320-1	VDE 40030381
Alt. use	Sun Fair Electric Wire & Cable (HK) Co. Ltd.	S-02	2.5A, 250Vac	IEC/EN 60320-1	VDE 40034448
Alt. use	TECX-UNIONS Technology Corporation	TU-333	2.5A, 250Vac	IEC/EN 60320-1	ENEC 00633
Alt. use	Rong Feng Industrial Co., Ltd.	RF-190	2.5A, 250Vac	IEC/EN 60320-1	VDE 40030379
Alt. use	Inalways Corporation	0724	2.5A, 250Vac	IEC/EN 60320-1	ENEC 2010080
Alt. use	Zhe Jiang Bei Er jia	ST-A04-002	2.5A, 250Vac	IEC/EN 60320-1	VDE 40016045
Alt. use	Shenzhen Delikang Electronics Technology Co. Ltd.	CDJ-2	2.5A, 250Vac	IEC/EN 60320-1	VDE 40015580
Appliance inlet CON1 Class I units (C14 type)	Zhejiang LECI Electronics Co., Ltd.	DB-14	10A, 250Vac	IEC/EN 60320-1	VDE 40032137
Alt. use	Rich Bay Co., Ltd.	R-301SN	10A, 250Vac	IEC/EN 60320-1	VDE 40030228

IEC 60601-1			
Clause	Requirement + Test	Result - Remark	Verdict

Alt. use	Sun Fair Electric Wire & Cable (HK)Co. Ltd.	S-03	10A, 250Vac	IEC/EN 60320-1	VDE 40034447
Alt. use	TECX-UNIONS Technology Corporation	TU-301-S, TU-301-SP	10A, 250Vac	IEC/EN 60320-1	ENEC 00647
Alt. use	Rong Feng Industrial Co., Ltd.	SS-120	10A, 250Vac	IEC/EN 60320-1	VDE 40028101
Alt. use	Inalways Corporation	0711	10A, 250Vac	IEC/EN 60320-1	ENEC 2010084
Alt. use	Zhe Jiang Bei Er jia	ST-A01-003J	10A, 250Vac	IEC/EN 60320-1	VDE 40013388
Appliance inlet CON1 Class II units (C8 type)	Zhejiang LECI Electronics Co., Ltd.	DB-8	2.5A, 250Vac	IEC/EN 60320-1	VDE 40032028
Alt. use	Rich Bay Co., Ltd.	R-201SN90	2.5A, 250Vac	IEC/EN 60320-1	VDE 40030384
Alt. use	Sun Fair Electric Wire & Cable (HK)Co. Ltd.	S-01	2.5A, 250Vac	IEC/EN 60320-1	VDE 40034449
Alt. use	TECX-UNIONS Technology Corporation	SO-222	2.5A, 250Vac	IEC/EN 60320-1	VDE 40043268
Alt. use	Rong Feng Industrial Co., Ltd.	RF-180	2.5A, 250Vac	IEC/EN 60320-1	VDE 40030168
Alt. use	Inalways Corporation	0721	2.5A, 250Vac	IEC/EN 60320-1	ENEC 2010087
Alt. use	Zhe Jiang Bei Er jia	ST-A03-005	2.5A, 250Vac	IEC/EN 60320-1	VDE 40014833
Alt. use	Shenzhen Delikang Electronics Technology Co. Ltd.	CDJ-8	2.5A, 250Vac	IEC/EN 60320-1	VDE 40025531
Input connector CON1 (For open frame)	NELTRON INDUSTRIAL CO LTD	2114S	Min 240V; Min 1.5A; Flame class min. V-2;	IEC/EN 60950-1	Tested with appliance UL E144392
Alt. use	JOINT TECH ELECTRONIC INDUSTRIAL CO LTD	A7920 series A3960 series	Min 250V; Min 7A; Flame class min. V-2;	IEC/EN 60950-1	Tested with appliance UL E179987
Alt. use	ZHEJIANG HONGXING ELECTRICAL CO LTD	HX396XX-YYY series	Min 250V; Min 5A; Flame class min. V-2;	IEC/EN 60950-1	Tested with appliance UL E228500
Earthing wire for Class I model	KUNSHAN NEW ZHICHENG ELECTRONICS TECHNOLOGIES CO LTD	1015, 1007, 1185	Min. 20 AWG, Min. 300V, Min. 80°C	IEC/EN 60950-1	Tested with appliance UL E237831

IEC 60601-1			
Clause	Requirement + Test	Result - Remark	Verdict

Alt. use	ZHUANG SHAN CHUAN ELECTRICAL PRODUCTS (KUNSHAN) CO LTD	1015, 1007, 1185	Min. 20 AWG, Min. 300V, Min. 80°C	IEC/EN 60950-1	Tested with appliance UL E333601
Alt. use	DONGGUAN CHUANTAI WIRE PRODUCTS CO LTD	1015, 1007, 1185	Min. 20 AWG, Min. 300V, Min. 80°C	IEC/EN 60950-1	Tested with appliance UL E315628
Alt. use	YONG HAO ELECTRICAL INDUSTRY CO LTD	1015, 1007, 1185	Min. 20 AWG, Min. 300V, Min. 80°C	IEC/EN 60950-1	Tested with appliance UL E240426
Alt. use	DONGGUAN GUNEETAL WIRE & CABLE CO LTD	1015, 1007, 1185	Min. 20 AWG, Min. 300V, Min. 80°C	IEC/EN 60950-1	Tested with appliance UL E204204
Alt. use	SHENG YU ENTERPRISE CO LTD	1015, 1007, 1185	Min. 20 AWG, Min. 300V, Min. 80°C	IEC/EN 60950-1	Tested with appliance UL E219726
Alt. use	KUNSHAN XINGHONGMEN G ELECTRONIC CO LTD	1015, 1007, 1185	Min. 20 AWG, Min. 300V, Min. 80°C	IEC/EN 60950-1	Tested with appliance UL E315421
Alt. use	SUZHOU YEMAO ELECTRONIC CO LTD	1015, 1007, 1185	Min. 20 AWG, Min. 300V, Min. 80°C	IEC/EN 60950-1	Tested with appliance UL E353532
Connection wiring for encapsulated model	KUNSHAN NEW ZHICHENG ELECTRONICS TECHNOLOGIES CO LTD	1015, 2468	Min. 20 AWG, Min. 300V, Min. 80°C	IEC/EN 60950-1	Tested with appliance UL E237831
Alt. use	ZHUANG SHAN CHUAN ELECTRICAL PRODUCTS (KUNSHAN) CO LTD	1015, 2468	Min. 20 AWG, Min. 300V, Min. 80°C	IEC/EN 60950-1	Tested within appliance UL E333601
Alt. use	DONGGUAN CHUANTAI WIRE PRODUCTS CO LTD	1015, 2468	Min. 20 AWG, Min. 300V, Min. 80°C	IEC/EN 60950-1	Tested within appliance UL E315628
Alt. use	YONG HAO ELECTRICAL INDUSTRY CO LTD	1015, 2468	Min. 20 AWG, Min. 300V, Min. 80°C	IEC/EN 60950-1	Tested within appliance UL E240426

IEC 60601-1			
Clause	Requirement + Test	Result - Remark	Verdict

Alt. use	DONGGUAN GUNEETAL WIRE & CABLE CO LTD	1015, 2468	Min. 20 AWG, Min. 300V, Min. 80°C	IEC/EN 60950-1	Tested within appliance UL E204204
Alt. use	SHENG YU ENTERPRISE CO LTD	1015, 2468	Min. 20 AWG, Min. 300V, Min. 80°C	IEC/EN 60950-1	Tested within appliance UL E219726
Alt. use	SUZHOU HONGMENG ELECTRONIC CO LTD	1015, 2468	Min. 20 AWG, Min. 300V, Min. 80°C	IEC/EN 60950-1	Tested within appliance UL E315421
Alt. use	SUZHOU YEMAO ELECTRONIC CO LTD	1015, 2468	Min. 20 AWG, Min. 300V, Min. 80°C	IEC/EN 60950-1	Tested within appliance UL E353532
Heat-shrinkable tubing	SHENZHEN WOER HEAT-SHRINKABLE MATERIAL CO LTD	RSFR-H, RSFR, RSFR-HPF	600V, 125 °C	IEC/EN 60950-1	Tested with appliance UL E3203950
Alt. use	QIFURUI ELECTRONICS CO	QFR-h	600V, 125°C	IEC/EN 60950-1 UL 224	Tested within appliance UL E225897
Alt. use	DONGGUAN SALIPT CO LTD	SALIPT S-901-300 SALIPT S-901-600	Min. 300V, 125°C	IEC/EN 60950-1 UL 224	Tested within appliance UL E209436
Alt. use	GUANGZHOU KAIHENG ENTERPRISE GROUP	K-2 (+) K-2 (CB)	Min. 300V, 125°C	IEC/EN 60950-1 UL 224	Tested within appliance UL E214175
Alt. use	CHANGYUAN ELECTRONICS (SHENZHEN) CO LTD	CB-HFT	Min. 300V, 125°C	IEC/EN 60950-1 UL 224	Tested within appliance UL E180908
Transformer (T1)	GlobTek BOAM HAOPUWEI	See attachment table of transformer model	Class B, with critical component listed below	IEC 60950-1	Tested with appliance
Magnet wire	PACIFIC ELECTRIC WIRE & CABLE (SHENZHEN) CO LTD	UEWN/U	MW28-C, 130°C	IEC 60950-1	Tested with appliance UL E201757
Alt. use	PACIFIC ELECTRIC WIRE & CABLE (SHENZHEN) CO LTD	UEWS/U	MW75-C, 130°C	IEC 60950-1	Tested with appliance UL E201757

IEC 60601-1			
Clause	Requirement + Test	Result - Remark	Verdict

Alt. use	JUNG SHING WIRE CO LTD	UEW-4	MW75C, 130°C	IEC 60950-1	Tested with appliance UL E174837
Alt. use	JUNG SHING WIRE CO LTD	UEY-2	MW28-C, 130°C	IEC 60950-1	Tested with appliance UL E174837
Alt. use	JIANGSU HONGLIU MAGNET WIRE TECHNOLOGY CO LTD	2UEW/130	MW75-C, 130°C	IEC 60950-1	Tested with appliance UL E335065
Alt. use	CHANGZHOU DAYANG WIRE & CABLE CO LTD	2UEW/130	MW75-C, 130°C	IEC 60950-1	Tested with appliance UL E158909
Alt. use	WUXI JUFENG COMPOUND LINE CO LTD	2UEWB	MW75#, 130°C	IEC 60950-1	Tested with appliance UL E206882
Alt. use	JIANGSU DARTONG M & E CO LTD	UEW	MW 75-C, 130°C	IEC 60950-1	Tested with appliance UL E237377
Alt. use	SHANDONG SAINT ELECTRIC CO LTD	UEW/130	MW75#, 130°C	IEC 60950-1	Tested with appliance UL E194410
Alt. use	ZHEJIANG LANGLI ELECTRIC EQUIPMENTS CO LTD	UEW	MW 79#, 130°C	IEC 60950-1	Tested with appliance UL E222214
Triple-insulated wire (Secondary)	Great Leoflon Industrial Co., Ltd.	TRW (B) Serie(s)	Class B, reinforced insulation	IEC 60950-1 UL 2353 UL 60601-1	VDE 136581 UL E211989
Alt. use	COSMOLINK CO. Ltd.	TIW-M Serie(s)	Class B, reinforced insulation	IEC 60950-1 UL 2353 UL 60601-1	VDE 138053 UL E213764
Alt. use	Furukawa Electric Co., Ltd. Electronics & Automotive Systems Company Global Business Development Division	TEX-E	Class B, reinforced insulation	IEC 60950-1 UL 2353 UL 60601-1	VDE 006735 UL E206440

IEC 60601-1			
Clause	Requirement + Test	Result - Remark	Verdict

Alt. use	TOTOKU ELECTRIC CO LTD	TIW-2	Reinforced insulation, rated 130° C (Class B)	UL 2353 UL60950-1 UL 60601-1	VDE 40005152 UL E249037
Alt. use	E&B TECHNOLOGY CO LTD	E&B-XXXB E&B-XXXB-1	Reinforced insulation, Class B	IEC 60950-1 UL 2353 UL 60601-1	VDE 40023473 UL E315265
Alt. use	CHANGYUAN ELECTRONICS (SHENZHEN) CO LTD	CB-TIW	Reinforced insulation, Class B	IEC 60950-1 UL 2353 UL 60601-1	Tested with appliance UL E249037
Alt. use	SHENZHEN JIUDING NEW MATERIAL CO LTD	DTIW-B	Reinforced insulation, Class B	IEC 60950-1 UL 2353 UL 60601-1	VDE 40037495 UL E357999
Bobbin	CHANG CHUN PLASTICS CO LTD	T375J T375HF	V-0, 150°C, thickness 0,45 mm min.	IEC 60950-1 UL 94 UL 746 A/B/C/D	Tested with appliance UL E59481
Alt. use	CHANG CHUN PLASTICS CO LTD	4130	V-0, 140°C, thickness 0,74 mm min.	IEC 60950-1 UL 94 UL 746 A/B/C/D	Tested with appliance UL E59481
Alt. use	SUMITOMO BAKELITE CO LTD	PM-9820	V-0, 150°C, thickness 0,45 mm min.	IEC 60950-1 UL 94 UL 746 A/B/C/D	Tested with appliance UL E41429
Alt. use	HITACHI CHEMICAL CO LTD	CP-J-8800	V-0, 150°C, thickness 0,45 mm min.	IEC 60950-1 UL 94 UL 746 A/B/C/D	Tested with appliance UL E42956
Insulating tape	3M COMPANY ELECTRICAL MARKETS DIV (EMD)	1350F-1 1350T-1 44	Min.130°C	IEC 60950-1 UL 510	Tested with appliance UL E17385
Alt. use	BONDTEC PACIFIC CO LTD	370S	Min.130°C	IEC 60950-1 UL 510	Tested with appliance UL E175868
Alt. use	JINGJIANG YAHUA PRESSURE SENSITIVE GLUE CO LTD	PZ CT WF	Min.130°C	IEC 60950-1 UL 510	Tested with appliance UL E165111

IEC 60601-1			
Clause	Requirement + Test	Result - Remark	Verdict

Alt. use	JINGJIANG JINGYI ADHESIVE PRODUCT CO LTD	JY25-A	Min.130°C	IEC 60950-1 UL 510	Tested with appliance UL E246950
Alt. use	CHANG SHU LIANG YI TAPE INDUSTRY CO LTD	LY-XX	Min.130°C	IEC 60950-1 UL 510	Tested with appliance UL E246820
PTFE tubing	GREAT HOLDING INDUSTRIAL CO LTD	TFT / TFS	Min. 300V, 200ºC	IEC 60950-1	Tested with appliance UL E156256
Alt. use	SHENZHEN WOER HEAT-SHRINKABLE MATERIAL CO LTD	WF	600V, 200ºC	IEC 60950-1	Tested with appliance UL E203950
Alt. use	CHANGYUAN ELECTRONICS (SHENZHEN) CO LTD	CB-TT-T / CB-TT-S	Min. 300V, 200ºC	IEC 60950-1	Tested with appliance UL E180908
Enclosure (all parts)	SABIC INNOVATIVE PLASTICS B V	SE1X, SE1	PPE+PS, Min. V-1, Min. thickness:2.0mm, 105°C	IEC 60950-1 UL 94 UL 746 A/B/C/D	Tested with appliance UL E45329
Alt. use	SABIC INNOVATIVE PLASTICS B V	SE100	PPE+PS, Min. V-1, Min. thickness:2.0mm, 95°C	IEC 60950-1 UL 94 UL 746 A/B/C/D	Tested with appliance UL E45329
Alt. use	SABIC INNOVATIVE PLASTICS B V	C2950	PC/ABS, Min. V-0, Min. thickness:2.0mm, 85°C	IEC 60950-1 UL 94 UL 746 A/B/C/D	Tested with appliance UL E45329
Alt. use	SABIC INNOVATIVE PLASTICS B V	CX7211 EXCY0098	PC/ABS, Min. V-1, Min. thickness:2.0mm, 90°C	IEC 60950-1 UL 94 UL 746 A/B/C/D	Tested with appliance UL E45329
Alt. use	SABIC INNOVATIVE PLASTICS B V	945	PC, Min. V-1, Min. thickness: 2.0mm, 120°C	IEC 60950-1 UL 94 UL 746 A/B/C/D	Tested with appliance UL E45329
Alt. use	SABIC INNOVATIVE PLASTICS B V	HF500R	PC, V-0, Min. thickness:2.0mm, 125°C	IEC 60950-1 UL 94 UL 746 A/B/C/D	Tested with appliance UL E45329

IEC 60601-1			
Clause	Requirement + Test	Result - Remark	Verdict

Alt. use	TEIJIN CHEMICALS LTD	LN-1250P LN-1250G	PC, Min. V-0, Min. thickness:2.0mm, 115°C	IEC 60950-1 UL 94 UL 746 A/B/C/D	Tested with appliance UL E50075
Label	DONGGUAN XIANGQUAN PRINTING CO LTD	XQ03	Rated min 80°C Suitable for use on the plastic enclosure	IEC/EN 60601-1 UL 969	Tested with appliance UL MH27594
Alt.	FAN JA PAPER PRINTING CO LTD	FJ-03-3	Rated min 80°C Suitable for use on the plastic enclosure	IEC/EN 60601-1 UL 969	Tested with appliance UL MH19546
Alt.	FAN JA PAPER PRINTING CO LTD	FJ07	Rated min 80°C Suitable for use on the plastic enclosure (PC or ABS)	IEC/EN 60601-1 UL 969	Tested with appliance UL MH19546
Alt.	DONGGUAN XIANGQUAN PRINTING CO LTD	XQ004-B	Rated min 80°C Suitable for use on the plastic enclosure	IEC/EN 60601-1 UL 969	Tested with appliance UL MH47303
Alt.	E-LIN ADHESIVE LABEL CO LTD	EL-15	Rated min 80°C Suitable for use on the plastic enclosure	IEC/EN 60601-1 UL 969	Tested with appliance UL MH45549
Alt.	SHENZHEN CORWIN PRINTING CO LTD	CW-01	Rated min 80°C Suitable for use on the plastic enclosure	IEC/EN 60601-1 UL 969	Tested with appliance UL MH47077
Alt.	YUEN CHANG SPECIAL PRINTING (SHENZHEN) CO LTD	JL-08 JL-02	Rated min 80°C Suitable for use on the plastic enclosure (PC or ABS)	IEC/EN 60601-1 UL 969	Tested with appliance UL MH29752
Alt.	GlobTek	---	Engraving , silkscreen or laser printing	IEC/EN 60601-1	Tested with appliance
Alt.	SUZHOU HAIRONG PACKING PRODUCTION CO LTD	HR-01 HR-02	Rated min 80°C Suitable for use on the plastic enclosure (PC or ABS)	IEC/EN 60601-1 UL 969	UL MH48692
Non-critical component list					
Output cord	Interchangeable	Interchangeable	Min. 24AWG, min. 300Vac, min. 80°C	IEC/EN 60950-1 UL 758	Tested with appliance UL approved

IEC 60601-1			
Clause	Requirement + Test	Result - Remark	Verdict

Attachment for transformer as below:

Product Model	Voltage Range	Transformer model	Product Model	Voltage Range	Transformer model
GTM96180	5V-8V	TF042	GTM96300	5-8.9V	TF038
	8.1V-14.9V	TF043		9-11.9V	TF057
	15V-18.9V	TF044		12-14.9V	TF039
	19V-30V	TF045		15-24V	TF040
	30.1V-48V	TF046		24.1-48V	TF041
GTM91120 GTM91128 series	5-7.5V	GT-3005001			
	7.6V-10.5V	GT-3009001			
	10.6V-14.5V	GT-3012001			
	14.6V-19.5V	GT-3015001			
	19.6V-24V	GT-3024001			
	24.1V-48V	GT-3048001			

8.10.1	RM RESULTS TABLE: Fixing of components	N/A

8.11.3.5	TABLE: Cord anchorages			N/A
Cord under test	**Mass of equipment (kg)**	**Pull (N)**	**Torque Nm)**	**Remarks**
--	--	--	--	--
Supplementary information:				

8.11.3.6	TABLE: Cord guard		N/A
Cord under test	**Test mass**	**Measured curvature**	**Remarks**
--	--	--	--
Supplementary information:			

9.2.1	RM RESULTS TABLE: HAZARDS associated with moving parts - General	N/A

9.2.2.2	TABLE: Measurement of gap “a” according to Table 20 (ISO 13852: 1996)	N/A

9.2.3.2	TABLE: Over-travel End Stop Test	N/A

9.2.4	RM RESULTS TABLE: Emergency stopping devices	N/A

9.2.5	RM RESULTS TABLE: Release of patient	N/A

9.4.2.1	TABLE: Instability—overbalance in transport position	N/A

IEC 60601-1			
Clause	Requirement + Test	Result - Remark	Verdict
9.4.2.2	**TABLE: Instability—overbalance excluding transport position**		**N/A**
9.4.2.3	**TABLE: Instability—overbalance from horizontal and vertical forces**		**N/A**
9.4.2.4.2	**TABLE: Castors and wheels – Force for propulsion**		**N/A**
9.4.2.4.3	**TABLE: Castors and wheels – Movement over a threshold**		**N/A**
9.4.3.1	**TABLE: Instability from unwanted lateral movement (including sliding) in transport position**		**N/A**
9.4.3.2	**TABLE: Instability from unwanted lateral movement (including sliding) excluding transport position**		**N/A**
9.4.4	**TABLE: Grips and other handling devices**		**N/A**
9.5.1	**RM RESULTS TABLE: Protective means**		**N/A**
9.6.1	**RM RESULTS TABLE: Acoustic energy - General**		**N/A**
9.6.2.2	**RM RESULTS TABLE: Infrasound and ultrasound energy**		**N/A**
9.7.2	**RM RESULTS TABLE: Pneumatic and hydraulic parts**		**N/A**
9.7.5	**TABLE: Pressure vessels**		**N/A**
9.7.7	**RM RESULTS TABLE: Pressure-relief device**		**N/A**
9.8.1	**RM RESULTS TABLE: Hazards associated with support systems - General**		**N/A**
9.8.2	**RM RESULTS TABLE: Tensile safety factor**		**N/A**
9.8.3.1	**RM RESULTS TABLE: Strength of patient or operator support or suspension systems - General**		**N/A**
9.8.3.2	**TABLE: PATIENT support/suspension system - Static forces**		**N/A**
9.8.3.3	**TABLE: Support/Suspension System – Dynamic forces due to loading from persons**		**N/A**
9.8.5	**RM RESULTS TABLE: Systems without mechanical protective devices**		**N/A**

IEC 60601-1			
Clause	Requirement + Test	Result - Remark	Verdict

10.1.1	**TABLE: Measurement of X - radiation**	**N/A**

10.1.2	**RM RESULTS TABLE: ME equipment intended to produce diagnostic or therapeutic X-radiation**	**N/A**

10.2	**RM RESULTS TABLE: Alpha, beta, gamma, neutron & other particle radiation**	**N/A**

10.5	**RM RESULTS TABLE: Other visible electromagnetic radiation**	**N/A**

10.6	**RM RESULTS TABLE: RISK associated with infrared radiation other than emitted by lasers and LEDS**	**N/A**

10.7	**RM RESULTS TABLE: RISK associated with ultraviolet radiation other than emitted by lasers and LEDS**	**N/A**

11.1.1	**TABLE: Excessive temperatures in ME EQUIPMENT**				**P**
Model No..... :	**1**	**2**			
Test ambient (°C) ..... :	**40**	**40**			
Test supply voltage/frequency (V/Hz)[4] .. :	**90/60**	**264/60**			

Model No.	Thermo-couple No.	Thermocouple location[3]	Max allowable temperature[1] from Table 22, 23 or 24 or RM file for AP[5] (°C)	Max measured temperature[2], (°C)	Remarks
GTM96180-1807-2.0-T2					
1	**1**	**T1 winding**	**110**	**105**	**--**
1	**2**	**T1 core**	**--**	**102**	**--**
1	**3**	**C1**	**105**	**101**	T marking on capacitor body
1	**4**	**U3**	**100**	**93**	See table 8.10
1	**5**	**MOV1**	**85**	**82**	See table 8.10
1	**6**	**CY1**	**125**	**101**	See table 8.10
1	**7**	**CX1**	**100**	**85**	See table 8.10
1	**8**	**PCB**	**130**	**111**	See table 8.10
1	**9**	**External enclosure**	**71**	**70**	Table 23 used, enclosure is likely to be touched for 1s to 10s.
1	**10**	**Inlet body**	**--**	**62**	**--**
2	**1**	**T1 winding**	**110**	**99**	**--**

IEC 60601-1					
Clause	Requirement + Test		Result - Remark		Verdict
2	**2**	**T1 core**	**--**	**94**	**--**
2	**3**	**C1**	**105**	**91**	T marking on capacitor body
2	**4**	**U3**	**100**	**84**	See table 8.10
2	**5**	**MOV1**	**85**	**60**	See table 8.10
2	**6**	**CY1**	**125**	**95**	See table 8.10
2	**7**	**CX1**	**100**	**63**	See table 8.10
2	**8**	**PCB**	**130**	**105**	See table 8.10
2	**9**	**External enclosure**	**71**	**65**	Table 23 used, enclosure is likely to be touched for 1s to 10s.
2	**10**	**Inlet body**	**--**	**58**	**--**
GTM96180-1817.9-5.9-T2					
1	**1**	**T1 winding**	**110**	**95**	**--**
1	**2**	**T1 core**	**--**	**93**	**--**
1	**3**	**C1**	**105**	**99**	T marking on capacitor body
1	**4**	**U3**	**100**	**76**	See table 8.10
1	**5**	**MOV1**	**85**	**77**	See table 8.10
1	**6**	**CY1**	**125**	**86**	See table 8.10
1	**7**	**CX1**	**100**	**77**	See table 8.10
1	**8**	**PCB**	**130**	**94**	See table 8.10
1	**9**	**External enclosure**	**71**	**67**	Table 23 used, enclosure is likely to be touched for 1s to 10s.
1	**10**	**Inlet body**	**--**	**58**	**--**
2	**1**	**T1 winding**	**110**	**92**	**--**
2	**2**	**T1 core**	**--**	**92**	**--**
2	**3**	**C1**	**105**	**79**	T marking on capacitor body
2	**4**	**U3**	**100**	**75**	See table 8.10
2	**5**	**MOV1**	**85**	**59**	See table 8.10
2	**6**	**CY1**	**125**	**83**	See table 8.10
2	**7**	**CX1**	**100**	**60**	See table 8.10
2	**8**	**PCB**	**130**	**80**	See table 8.10

IEC 60601-1					
Clause	Requirement + Test		Result - Remark		Verdict
2	**9**	**External enclosure**	**71**	**68**	Table 23 used, enclosure is likely to be touched for 1s to 10s.
2	**10**	**Inlet body**	**--**	**55**	**--**
GTM96180-1838-2.0-T3A					
1	**1**	**T1 winding**	**110**	**97**	**--**
1	**2**	**T1 core**	**--**	**95**	**--**
1	**3**	**C1**	**105**	**96**	T marking on capacitor body
1	**4**	**U3**	**100**	**76**	See table 8.10
1	**5**	**MOV1**	**85**	**74**	See table 8.10
1	**6**	**CY1**	**125**	**81**	See table 8.10
1	**7**	**CX1**	**100**	**71**	See table 8.10
1	**8**	**PCB**	**130**	**93**	See table 8.10
1	**9**	**External enclosure**	**71**	**68**	Table 23 used, enclosure is likely to be touched for 1s to 10s.
1	**10**	**Inlet body**	**--**	**63**	**--**
2	**1**	**T1 winding**	**110**	**88**	**--**
2	**2**	**T1 core**	**--**	**88**	**--**
2	**3**	**C1**	**105**	**73**	T marking on capacitor body
2	**4**	**U3**	**100**	**70**	See table 8.10
2	**5**	**MOV1**	**85**	**55**	See table 8.10
2	**6**	**CY1**	**125**	**75**	See table 8.10
2	**7**	**CX1**	**100**	**55**	See table 8.10
2	**8**	**PCB**	**130**	**74**	See table 8.10
2	**9**	**External enclosure**	**71**	**62**	Table 23 used, enclosure is likely to be touched for 1s to 10s.
2	**10**	**Inlet body**	**--**	**62**	**--**
GTM96180-1848-T3					
1	**1**	**T1 winding**	**110**	**92**	**--**
1	**2**	**T1 core**	**--**	**94**	**--**

IEC 60601-1					
Clause	Requirement + Test		Result - Remark		Verdict
1	**3**	**C1**	**105**	**98**	T marking on capacitor body
1	**4**	**U3**	**100**	**73**	See table 8.10
1	**5**	**MOV1**	**85**	**77**	See table 8.10
1	**6**	**CY1**	**125**	**90**	See table 8.10
1	**7**	**CX1**	**100**	**77**	See table 8.10
1	**8**	**PCB**	**130**	**95**	See table 8.10
1	**9**	**External enclosure**	**71**	**66**	Table 23 used, enclosure is likely to be touched for 1s to 10s.
1	**10**	**Inlet body**	**--**	**57**	**--**
2	**1**	**T1 winding**	**110**	**86**	**--**
2	**2**	**T1 core**	**--**	**89**	**--**
2	**3**	**C1**	**105**	**78**	T marking on capacitor body
2	**4**	**U3**	**100**	**69**	See table 8.10
2	**5**	**MOV1**	**85**	**57**	See table 8.10
2	**6**	**CY1**	**125**	**84**	See table 8.10
2	**7**	**CX1**	**100**	**58**	See table 8.10
2	**8**	**PCB**	**130**	**75**	See table 8.10
2	**9**	**External enclosure**	**71**	**62**	Table 23 used, enclosure is likely to be touched for 1s to 10s.
2	**10**	**Inlet body**	**--**	**55**	**--**
GTM96300-2307.5-2.5-R2					
1	**1**	**T1 winding**	**110**	**106**	**--**
1	**2**	**T1 core**	**--**	**98**	**--**
1	**3**	**C1**	**105**	**95**	T marking on capacitor body
1	**4**	**U3**	**100**	**96**	See table 8.10
1	**5**	**MOV1**	**85**	**66**	See table 8.10
1	**6**	**CY1**	**125**	**90**	See table 8.10
1	**7**	**CX1**	**100**	**75**	See table 8.10
1	**8**	**PCB**	**130**	**88**	See table 8.10

IEC 60601-1					
Clause	Requirement + Test		Result - Remark		Verdict
1	**9**	**External enclosure**	**71**	**69**	Table 23 used, enclosure is likely to be touched for 1s to 10s.
1	**10**	**Inlet body**	**--**	**61**	**--**
2	**1**	**T1 winding**	**110**	**102**	**--**
2	**2**	**T1 core**	**--**	**93**	**--**
2	**3**	**C1**	**105**	**84**	T marking on capacitor body
2	**4**	**U3**	**100**	**90**	See table 8.10
2	**5**	**MOV1**	**85**	**55**	See table 8.10
2	**6**	**CY1**	**125**	**86**	See table 8.10
2	**7**	**CX1**	**100**	**63**	See table 8.10
2	**8**	**PCB**	**130**	**84**	See table 8.10
2	**9**	**External enclosure**	**71**	**70**	Table 23 used, enclosure is likely to be touched for 1s to 10s.
2	**10**	**Inlet body**	**--**	**54**	**--**
GTM96300-3614.5-2.5-R3A					
1	**1**	**T1 winding**	**110**	**105**	**--**
1	**2**	**T1 core**	**--**	**105**	**--**
1	**3**	**C1**	**105**	**103**	T marking on capacitor body
1	**4**	**U3**	**100**	**97**	See table 8.10
1	**5**	**MOV1**	**85**	**72**	See table 8.10
1	**6**	**CY1**	**125**	**107**	See table 8.10
1	**7**	**CX1**	**100**	**85**	See table 8.10
1	**8**	**PCB**	**130**	**96**	See table 8.10
1	**9**	**External enclosure**	**71**	**70**	Table 23 used, enclosure is likely to be touched for 1s to 10s.
1	**10**	**Inlet body**	**--**	**61**	**--**
2	**1**	**T1 winding**	**110**	**98**	**--**
2	**2**	**T1 core**	**--**	**98**	**--**
2	**3**	**C1**	**105**	**81**	T marking on capacitor body

IEC 60601-1					
Clause	Requirement + Test		Result - Remark		Verdict
2	**4**	**U3**	**100**	**92**	See table 8.10
2	**5**	**MOV1**	**85**	**56**	See table 8.10
2	**6**	**CY1**	**125**	**99**	See table 8.10
2	**7**	**CX1**	**100**	**64**	See table 8.10
2	**8**	**PCB**	**130**	**88**	See table 8.10
2	**9**	**External enclosure**	**71**	**68**	Table 23 used, enclosure is likely to be touched for 1s to 10s.
2	**10**	**Inlet body**	**--**	**50**	**--**
GTM96300-3624-R2					
1	**1**	**T1 winding**	**110**	**105**	**--**
1	**2**	**T1 core**	**--**	**105**	**--**
1	**3**	**C1**	**105**	**103**	T marking on capacitor body
1	**4**	**U3**	**100**	**92**	See table 8.10
1	**5**	**MOV1**	**85**	**72**	See table 8.10
1	**6**	**CY1**	**125**	**98**	See table 8.10
1	**7**	**CX1**	**100**	**89**	See table 8.10
1	**8**	**PCB**	**130**	**95**	See table 8.10
1	**9**	**External enclosure**	**71**	**69**	Table 23 used, enclosure is likely to be touched for 1s to 10s.
1	**10**	**Inlet body**	**--**	**72**	**--**
2	**1**	**T1 winding**	**110**	**88**	**--**
2	**2**	**T1 core**	**--**	**91**	**--**
2	**3**	**C1**	**105**	**76**	T marking on capacitor body
2	**4**	**U3**	**100**	**87**	See table 8.10
2	**5**	**MOV1**	**85**	**54**	See table 8.10
2	**6**	**CY1**	**125**	**87**	See table 8.10
2	**7**	**CX1**	**100**	**62**	See table 8.10
2	**8**	**PCB**	**130**	**81**	See table 8.10
2	**9**	**External enclosure**	**71**	**66**	Table 23 used, enclosure is likely to be touched for 1s to 10s.

IEC 60601-1					
Clause	Requirement + Test		Result - Remark		Verdict
2	**10**	**Inlet body**	**--**	**55**	**--**
GTM96300-3648-R3A					
1	**1**	**T1 winding**	**110**	**103**	**--**
1	**2**	**T1 core**	**--**	**101**	**--**
1	**3**	**C1**	**105**	**100**	T marking on capacitor body
1	**4**	**U3**	**100**	**98**	See table 8.10
1	**5**	**MOV1**	**85**	**67**	See table 8.10
1	**6**	**CY1**	**125**	**95**	See table 8.10
1	**7**	**CX1**	**100**	**79**	See table 8.10
1	**8**	**PCB**	**130**	**104**	See table 8.10
1	**9**	**External enclosure**	**71**	**69**	Table 23 used, enclosure is likely to be touched for 1s to 10s.
1	**10**	**Inlet body**	**--**	**58**	**--**
2	**1**	**T1 winding**	**110**	**90**	**--**
2	**2**	**T1 core**	**--**	**90**	**--**
2	**3**	**C1**	**105**	**76**	T marking on capacitor body
2	**4**	**U3**	**100**	**90**	See table 8.10
2	**5**	**MOV1**	**85**	**52**	See table 8.10
2	**6**	**CY1**	**125**	**86**	See table 8.10
2	**7**	**CX1**	**100**	**58**	See table 8.10
2	**8**	**PCB**	**130**	**86**	See table 8.10
2	**9**	**External enclosure**	**71**	**70**	Table 23 used, enclosure is likely to be touched for 1s to 10s.
2	**10**	**Inlet body**	**--**	**50**	**--**

IEC 60601-1			
Clause	Requirement + Test	Result - Remark	Verdict

Supplementary information:

[1] Maximum allowable temperature on surfaces of test corner is 90 °C

[2] Max temperature determined in accordance with 11.1.3e)

[3] When thermocouples used to determine temperature of windings, limits of Table 22 reduced by 10 °C.

[4] Supply voltage:

- ME EQUIPMENT with heating elements - 110 % of the maximum RATED voltage;
- Motor operated ME EQUIPMENT - least favourable voltage between 90 % of the minimum RATED and 110 % of the maximum RATED voltage. ME EQUIPMENT operated under normal load and normal DUTY CYCLE.
- Combined heating and motor operated and other ME EQUIPMENT - tested both at 110 % of the maximum RATED voltage and at 90 % of the minimum RATED voltage.

[5] **APPLIED PARTS** intended to supply heat to a **PATIENT - S**ee RISK MANAGEMENT FILE containing temperatures and clinical effects. Also, see instructions for use.

IEC 60601-1			
Clause	Requirement + Test	Result - Remark	Verdict

11.1.1	**RM RESULTS TABLE: Maximum temperature during normal use (Table 23 or 24)**	**N/A**

11.1.2.1	**RM RESULTS TABLE: Applied parts intended to supply heat to patient**	**N/A**

11.1.2.2	**RM RESULTS TABLE: Applied parts not intended to supply heat to patient**	**N/A**

11.1.3	**TABLE: Temperature of windings by change-of-resistance method**							**N/A**
Temperature T of winding:		**t_1 (°C)**	**R_1 (Ω)**	**t_2 (°C)**	**R_2 (Ω)**	**T (°C)**	**Allowed T_{max} (°C)**	**Insulation class**
--		**--**	**--**	**--**	**--**	**--**	**--**	**--**
Supplementary information:								

11.1.3	**RM RESULTS TABLE: Measurements**	**N/A**

11.2.2.1	**RM RESULTS TABLE: Risk of fire in an oxygen rich environment**	**N/A**

11.2.2.1	**TABLE: Alternative method to 11.2.2.1 a) 5) to determine existence of an ignition source**	**N/A**

11.3	**RM RESULTS TABLE: Constructional requirements for fire enclosures of ME equipment**	**N/A**

11.5	**RM RESULTS TABLE: ME equipment and ME systems intended for use in conjunction with flammable agents**	**N/A**

11.6.1	**TABLE: overflow, spillage, leakage, ingress of water, cleaning, disinfection, sterilization, compatibility with substances**	**N/A**

IEC 60601-1			
Clause	Requirement + Test	Result - Remark	Verdict

11.6.3	**RM RESULTS TABLE: Spillage on ME equipment and ME system**	**N/A**
11.6.5	**RM RESULTS TABLE: Ingress of water or particulate matter into ME EQUIPMENT and ME SYSTEMS**	**N/A**
11.6.7	**RM RESULTS TABLE: Sterilization of ME equipment and ME systems**	**N/A**
11.6.8	**RM RESULTS TABLE: Compatibility with substances used**	**N/A**
12.1	**RM RESULTS TABLE: Accuracy of controls and equipment**	**N/A**
12.4.1	**RM RESULTS TABLE: Intentional exceeding of safety limits**	**N/A**
12.4.2	**RM RESULTS TABLE: Indication of parameters relevant to safety**	**N/A**
12.4.3	**RM RESULTS TABLE: Accidental selection of excessive output values**	**N/A**
12.4.4	**RM RESULTS TABLE: Incorrect output**	**N/A**
12.4.5.3	**RM RESULTS TABLE: Radiotherapy equipment**	**N/A**
12.4.5.4	**RM RESULTS TABLE: Other ME equipment producing diagnostic or therapeutic radiation**	**N/A**
12.4.6	**RM RESULTS TABLE: Diagnostic or therapeutic acoustic pressure**	**N/A**

IEC 60601-1			
Clause	Requirement + Test	Result - Remark	Verdict

13.1.2	**TABLE: measurement of power or energy dissipation in parts & components to waive SINGLE FAULT CONDITIONS in 4.7, 8.1 b), 8.7.2, and 13.2.2 relative to emission of flames, molten metal, or ignitable substances**	**N/A**

Power dissipated less than (W)..... :	**15**
Energy dissipated less than (J)..... :	**900**

Part or component tested	Measured power dissipated (W)	Calculated energy dissipated (J)	SINGLE FAULT CONDITIONS waived (Yes/No)	Remarks
--	--	--	--	--

Supplementary information:

IEC 60601-1			
Clause	Requirement + Test	Result - Remark	Verdict

13.2	**TABLE: SINGLE FAULT CONDITIONS in accordance with 13.2.2 to 13.2.13, inclusive**	P

Clause No.	Description of SINGLE FAULT CONDITION	Results observed	HAZARDOUS SITUATION (Yes/No)
13.2.2	**Electrical SINGLE FAULT CONDITIONS per Clause 8.1:**	—	—
	C4 short-circuited	EUT protected immediately	No
	Q1 pinD-S short-circuited	EUT protected immediately	No
	Q1 pinG-S short-circuited	EUT shut down immediately, fuse opened	No
	D2 short-circuited	EUT protected immediately	No
	T1 pin1-2 short-circuited	EUT protected immediately	No
	T1 pinTA-TB short-circuited	EUT shut down, fuse opened	No
	C1 short-circuited	EUT protected immediately	No
	BD1 short-circuited	EUT shut down, fuse opened	No
13.2.3	**Overheating of transformers per Clause 15.5:**	—	—
		See 15.5	No
13.2.4	**Failure of THERMOSTATS according to 13.2.13 & 15.4.2, overloading - THERMOSTATS short circuited or interrupted, the less favourable of the two:**	—	—
		No thermostat used	N/A
13.2.5	**Failure of temperature limiting devices according to 13.2.13 & 15.4.2, overloading, THERMOSTATS short circuited or interrupted, the less favourable of the two:**	—	—
		No temperature limiting device	N/A
13.2.7	**Impairment of cooling that could result in a HAZARD using test method of 11.1:**	—	—
	Single ventilation fans locked consecutively	No fan used	N/A
	Ventilation openings on top and sides impaired by covering openings on top of ENCLOSURE or positioning of ME EQUIPMENT against walls	No ventilation opening	N/A
	Simulated blocking of filters	No filter	N/A
	Flow of a cooling agent interrupted	No cooling agent used	N/A
13.2.8	**Locking of moving parts – Only one part locked at a time – Also see 13.2.10 below:**	—	—
		No moving part	N/A

IEC 60601-1			
Clause	Requirement + Test	Result - Remark	Verdict

Clause No.	Description of SINGLE FAULT CONDITION	Results observed	HAZARDOUS SITUATION (Yes/No)
13.2.9	**Interruption and short circuiting of motor capacitors – Motor capacitors short & open circuited [1] – Also see 13.10**	**—**	**—**
		No such motor	N/A
		No such motor	N/A
13.2.10	**Additional test criteria for motor operated ME EQUIPMENT in 13.2.8 &13.2.9:**	**—**	**—**
	For every test in SINGLE FAULT CONDITION of 13.2.8 and 13.2.9, motor-operated EQUIPMENT stared from COLD CONDITION at RATED voltage or upper limit of RATED voltage range for specified time:	No motor	N/A
	Temperatures of windings determined at the end of specified test periods or at the instant of operation of fuses, THERMAL CUT-OUTS, motor protective devices	No motor	N/A
	Temperatures measured as specified in 11.1.3 d)	No motor	N/A
	Temperatures did not exceed limits of Table 26	No motor	N/A
13.2.12	**Failure of parts that might result in a MECHANICAL HAZARD (See 9 & 15.3):**	**—**	**—**
		To be checked on end product	N/A

Supplementary information:
[1] Test with short-circuited capacitor not performed when motor provided with a capacitor complying with IEC 60252-1 and the ME EQUIPMENT not intended for unattended use including automatic or remote control. See Attachment # and appended Table 8.10.

IEC 60601-1			
Clause	Requirement + Test	Result - Remark	Verdict

13.2.6	**RM RESULTS TABLE: Leakage of liquid**	**N/A**

14.1	**RM RESULTS TABLE: Programmable electrical medical systems - General**	**N/A**

14.6.1	**RM RESULTS TABLE: Identification of known and foreseeable hazards**	**N/A**

14.6.2	**RM RESULTS TABLE: Risk control**	**N/A**

14.7	**RM RESULTS TABLE: Requirement specification**	**N/A**

14.8	**RM RESULTS TABLE: Architecture**	**N/A**

14.10	**RM RESULTS TABLE: Verification**	**N/A**

14.11	**RM RESULTS TABLE: PEMS validation**	**N/A**

14.13	**RM RESULTS TABLE: Connection of PEMS by NETWORK/DATA COUPLING to other equipment**	**N/A**

15.3	**TABLE: Mechanical Strength tests [1)]**			**P**
Clause	**Name of Test**	**Test conditions**	**Observed results/Remarks**	
15.3.2	**Push Test**	**Force = 250 N ± 10 N for 5 s**	No visible damage.	
15.3.3	**Impact Test**	**Steel ball (50 mm in dia., 500 g ± 25 g) falling from a 1.3 m**	No visible damage.	
15.3.4.1	**Drop Test (hand-held)**	**Free fall height (m) =**	N/A	
15.3.4.2	**Drop Test (portable)**	**Drop height (cm) =**	No visible damage.	
15.3.5	**Rough handling test**	**Travel speed (m/s) =**	N/A	
15.3.6	**Mould Stress Relief**	**7 h in oven at temperature (°C) =**	No visible damage.	
Supplementary information: [1)]As applicable, Push, Impact, Drop, Mould Stress Relief and Rough Handling Tests (delete not applicable rows).				

IEC 60601-1			
Clause	Requirement + Test	Result - Remark	Verdict

15.4.1	**RM RESULTS TABLE: Construction of connectors**	**N/A**
15.4.2.1 a	**RM RESULTS TABLE: THERMAL CUT-OUTS and OVER-CURRENT RELEASES**	**N/A**
15.4.2.1 c	**RM RESULTS TABLE: Independent non-SELF-RESETTING THERMAL CUT-OUT**	**N/A**
15.4.2.1 d	**RM RESULTS TABLE: Loss of function of ME EQUIPMENT**	**N/A**
15.4.2.1 h	**RM RESULTS TABLE: ME EQUIPMENT with tubular heating elements**	**N/A**
15.4.3.1	**RM RESULTS TABLE: Housing**	**N/A**
15.4.3.2	**RM RESULTS TABLE: Connection**	**N/A**
15.4.3.3	**RM RESULTS TABLE: Protection against overcharging**	**N/A**
15.4.4	**RM RESULTS TABLE: Indicators**	**N/A**
15.4.5	**RM RESULTS TABLE: Pre-set controls**	**N/A**
15.4.6	**TABLE: actuating parts of controls of ME EQUIPMENT – torque & axial pull tests**	**N/A**

15.5.1.2	**TABLE: transformer short circuit test short-circuit applied at end of windings or at the first point that could be short circuited under SINGLE FAULT CONDITION**	**P**
Primary voltage (most adverse value from 90 % to 110 % of RATED voltage)(V)[1] .....:	**264Vac**	**—**
RATED input frequency (Hz) .....:	**60**	**—**

Winding tested	Class of insulation (A, B, E, F, or H)	Type of protective device (fuse, circuit breaker) /Ratings	Protective device operated Yes/No	Time to THERMAL STABILITY (when protective device did not operate)(Min)	Maximum allowed temp from Table 31 (ºC)	Maximum winding temp measured (ºC)	Ambient (ºC)
TF046 (for GTM96180 Series)	B	N/A[2]	No	5min	165[3]	88	25
TF038 (for GTM96300 series)	B	N/A[2]	No	5min	165[3]	102	25

IEC 60601-1			
Clause	Requirement + Test	Result - Remark	Verdict

GT-3012001 (for GTM91120 and GTM91128 series)	**B**	**N/A[2]**	**No**	**5min**	**165[3]**	**85**	**25**

Supplementary information:
[1] Loads on other windings between no load and their NORMAL USE load. Short-circuit applied at end of windings or at the first point that could be short circuited under SINGLE FAULT CONDITION.

[2] SMPS current limiting circuits operated immediately.

[3] Thermocouples are used, so the limit is to be reduced by10 ºC.

15.5.1.3	**TABLE: transformer overload test – conducted only when protective device under short-circuit test operated**	**P**
Primary voltage, most adverse value between 90 % to 110 % of RATED voltage (V)[1].. :		**264**
RATED input frequency (Hz) ..... :		**60**
Test current just below minimum current that would activate protective device & achieve THERMAL STABILITY under method a) (A) ..... :		**See below**
Test current based on Table 32 when protective device that operated under method a) is external to transformer, and it was shunted (A)..... :		**N/A**

Winding tested	Class of insulation (A, B, E, F, H)	Type of protective device used (fuse, circuit breaker)/Ratings	Maximum allowed temp from Table 31 (ºC)	Maximum winding temp measured (ºC)	Ambient (ºC)
TF046 (for GTM96180 Series)	**B**	**Fuse 1.6A (OL current 0.858A)**	**165[2]**	**109**	**25**
TF038 (for GTM96300 series)	**B**	**Fuse 1.6A (OL current 0.803A)**	**165[2]**	**94**	**25**
GT-3012001 (for GTM91120 and GTM91128 series)	**B**	**Fuse 1.6A (OL current 0.828A)**	**165[2]**	**100**	**25**

Supplementary information:
[1] Loads on other windings between no load and their NORMAL USE load.
Time durations: - IEC 60127-1 fuse: 30 min at current from Table 32.
Non IEC 60127-1 fuse: 30 min at the current based on characteristics supplied by fuse manufacturer, specifically, 30 min clearing-time current. When no 30 min clearing-time current data available, test current from Table 32 used until THERMAL STABILITY achieved.
- Other types of protective devices: until THERMAL STABILITY achieved at a current just below minimum current operating the protective device in a). This portion concluded at specified time or when a second protective device opened.

[2] Thermocouples are used, so the limit is to be reduced by10 ºC.

IEC 60601-1			
Clause	Requirement + Test	Result - Remark	Verdict

15.5.2	TABLE: Transformer dielectric strength after humidity preconditioning of 5.7				P
Transformer Model/Type/ Part No	**Test voltage applied between**	**Test voltage, (V)**	**Test frequency (Hz)**	**Breakdown Yes/No**	**Deterioration Yes/No**
All models	**Primary & secondary windings**	**4000**	**50**	**No**	**No**
All models	**Primary winding & frame**	**1500**	**50**	**No**	**No**
All models	**Secondary winding & frame**	**1500**	**50**	**No**	**No**
Supplementary information: Tests conducted under the conditions of 11.1, in ME EQUIPMENT or under simulated conditions on the bench. See Clause 15.5.2 for test parameters & other details					

16.1	RM RESULTS TABLE: General requirements for ME Systems	N/A

16.6.1	TABLE: LEAKAGE CURRENTS in ME SYSTEM _ TOUCH CURRENT MEASUREMENTS	N/A

16.9.1	RM RESULTS TABLE: Connection terminals and connectors	N/A

17	RM RESULTS TABLE: Electromagnetic compatibility of ME equipment and ME systems	N/A

SP	TABLE: Additional or special tests conducted	N/A
Clause and Name of Test	**Test type and condition**	**Observed results**
--	--	--
Supplementary information:		

ATTACHMENT Photo of EUT

External view for GTM96300 series

External view for GTM96300 series

Internal view for GTM96300 series (Class I)

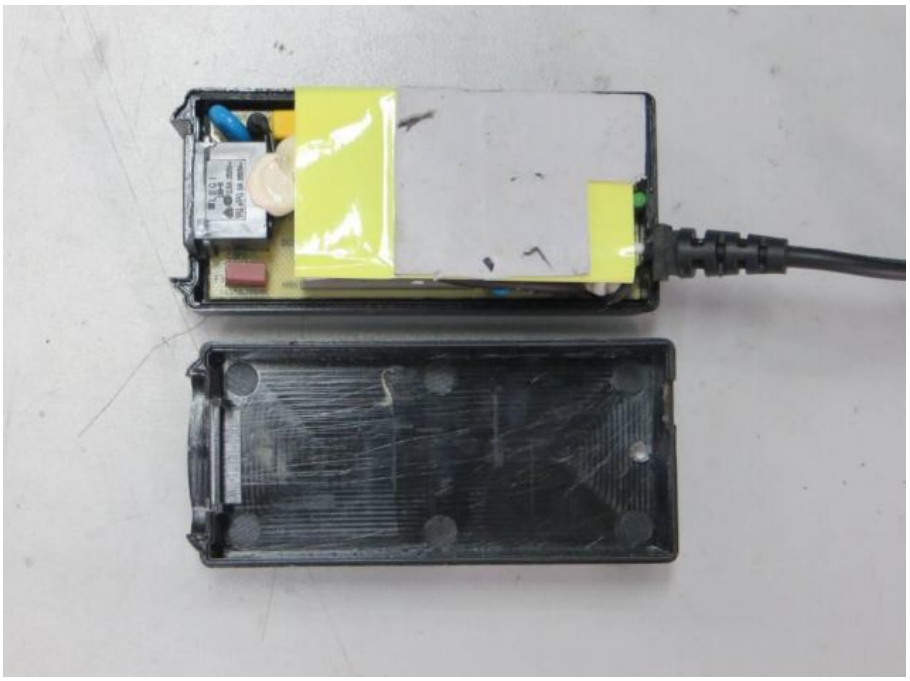

Internal view for GTM96300 series (Class I)

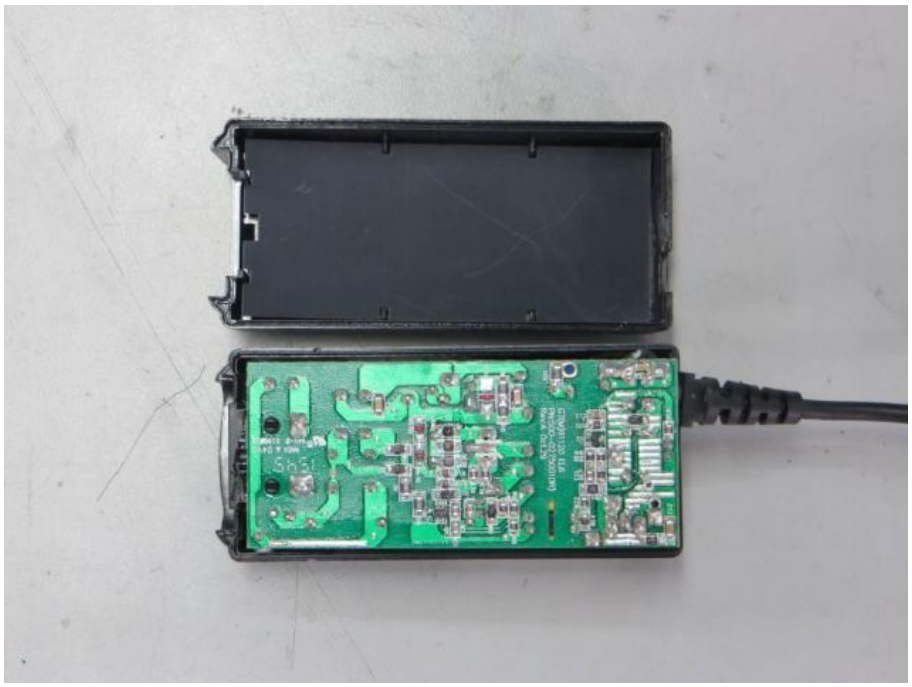

PCB for GTM96300 series (Class I)

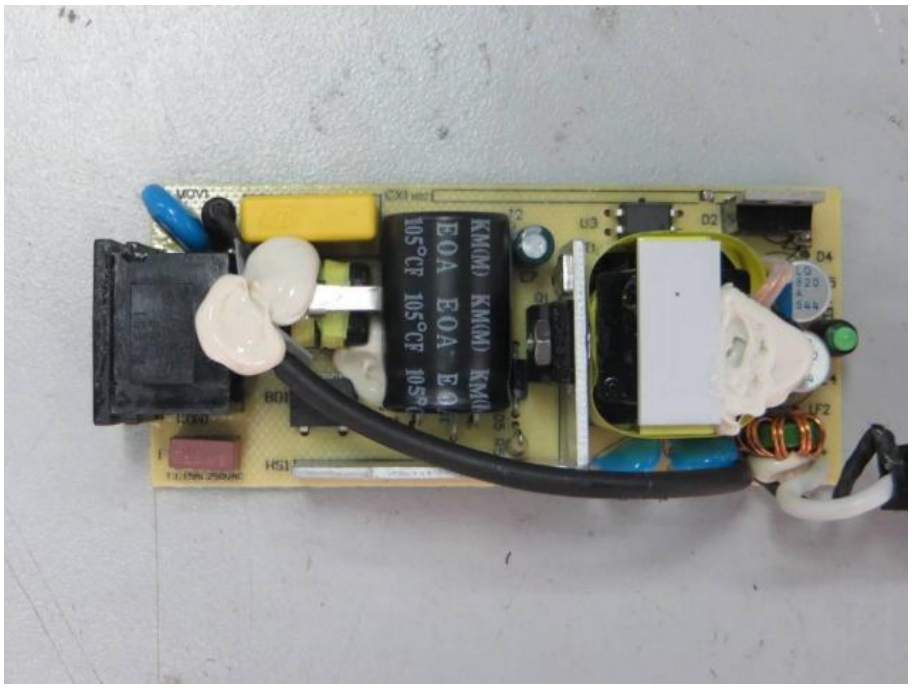

PCB for GTM96300 series (Class I)

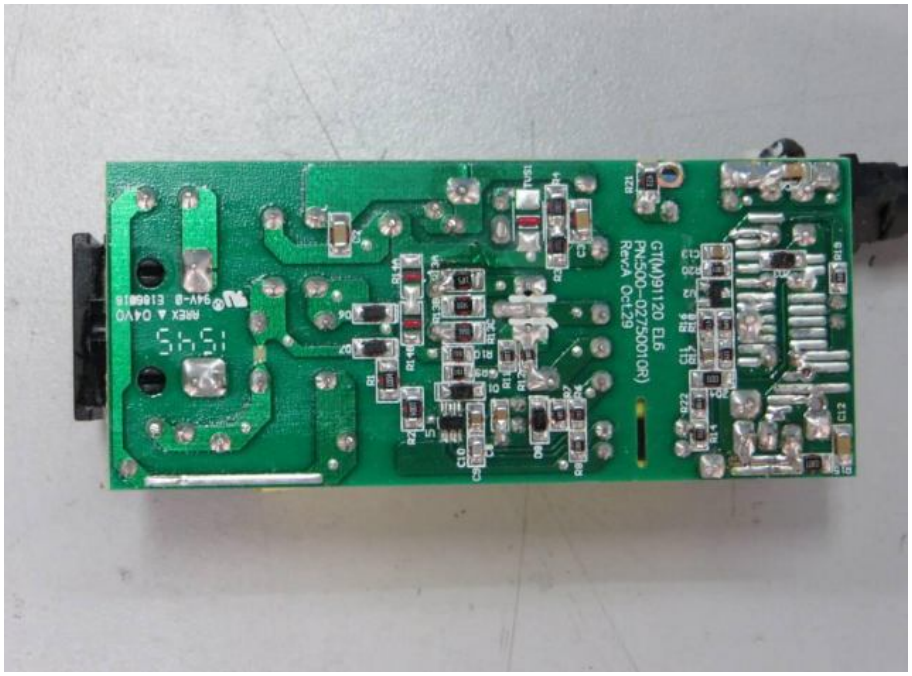

Internal view for GTM96300 series (Class II)

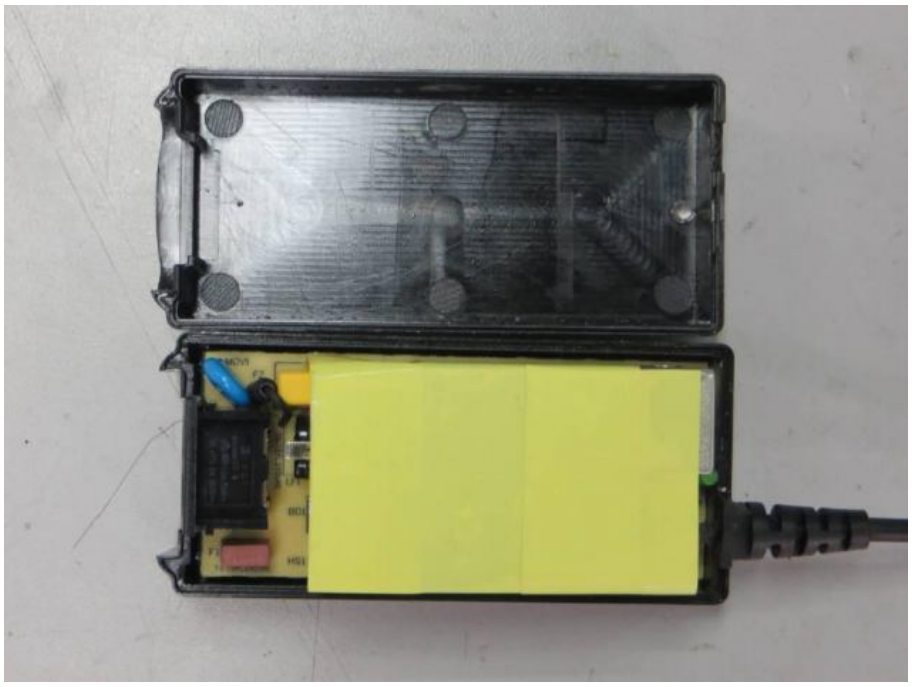

Internal view for GTM96300 series (Class II)

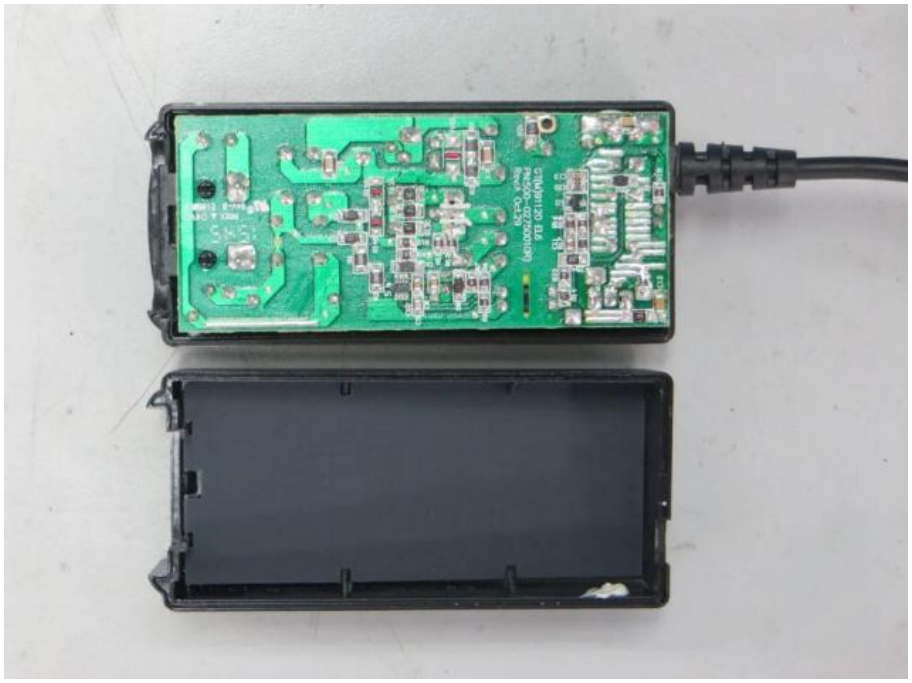

PCB for GTM96300 series (Class II)

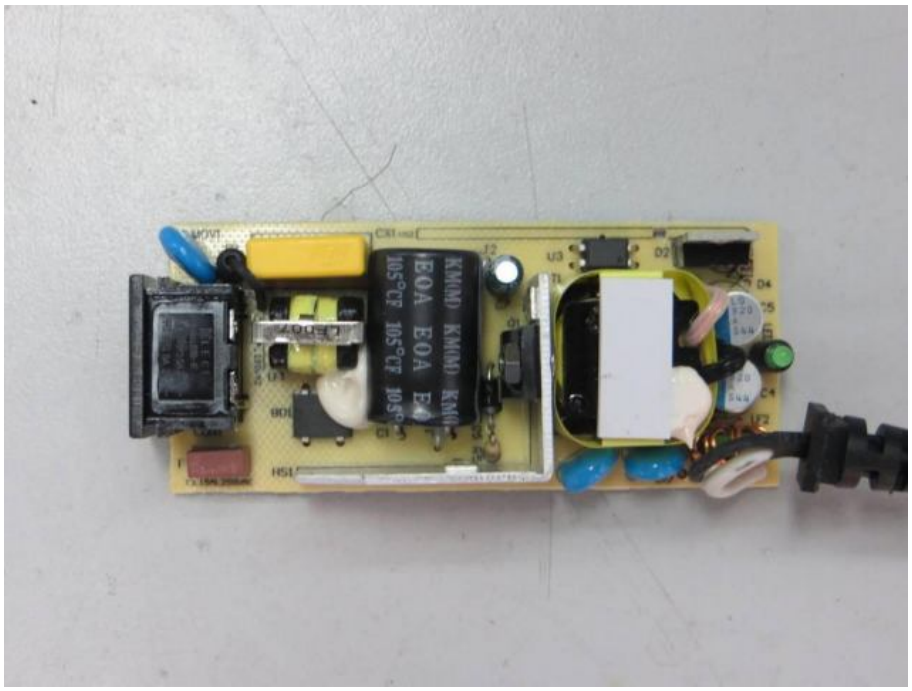

PCB for GTM96300 series (Class II)

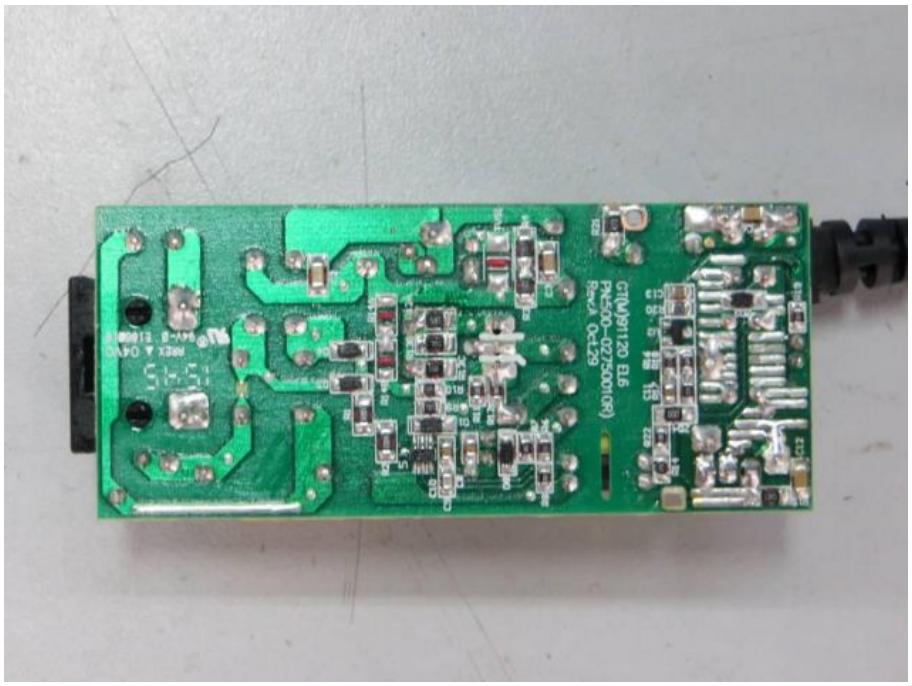

External view for GTM96180 series (desktop)

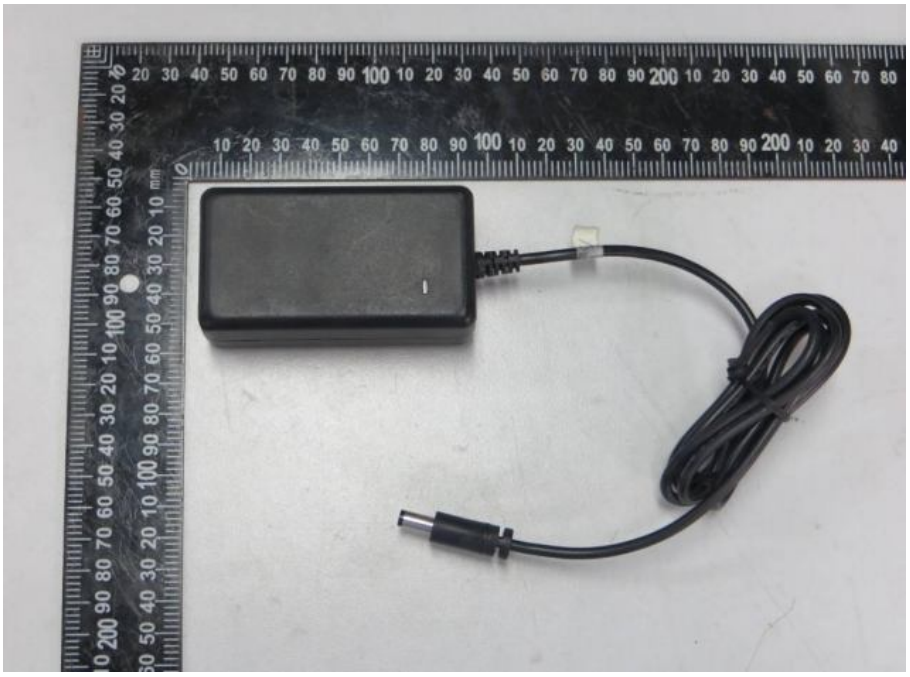

External view for GTM96180 series (desktop)

External view for GTM96180 series (Interchangeable plug)

External view for GTM96180 series (Interchangeable plug)

Internal view for GTM96180 series (Class I)

Internal view for GTM96180 series (Class I)

PCB for GTM96180 series (Class I)

PCB for GTM96180 series (Class I)

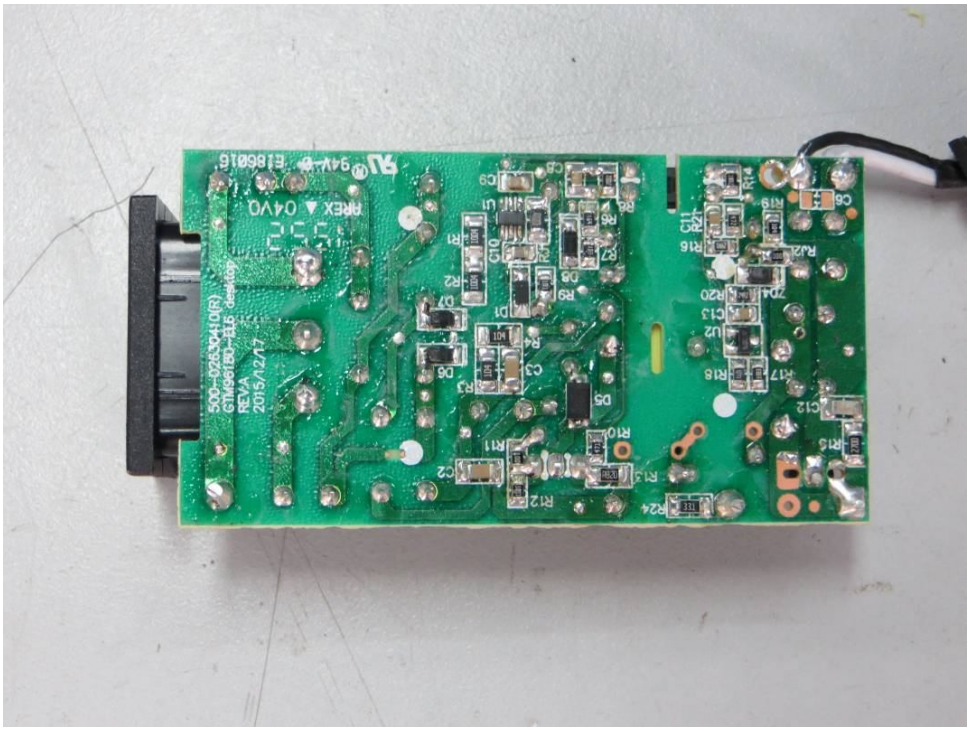

Internal view for GTM96180 series (Class II)

Internal view for GTM96180 series (Class II)

PCB for GTM96180 series (Class II)

PCB for GTM96180 series (Class II)

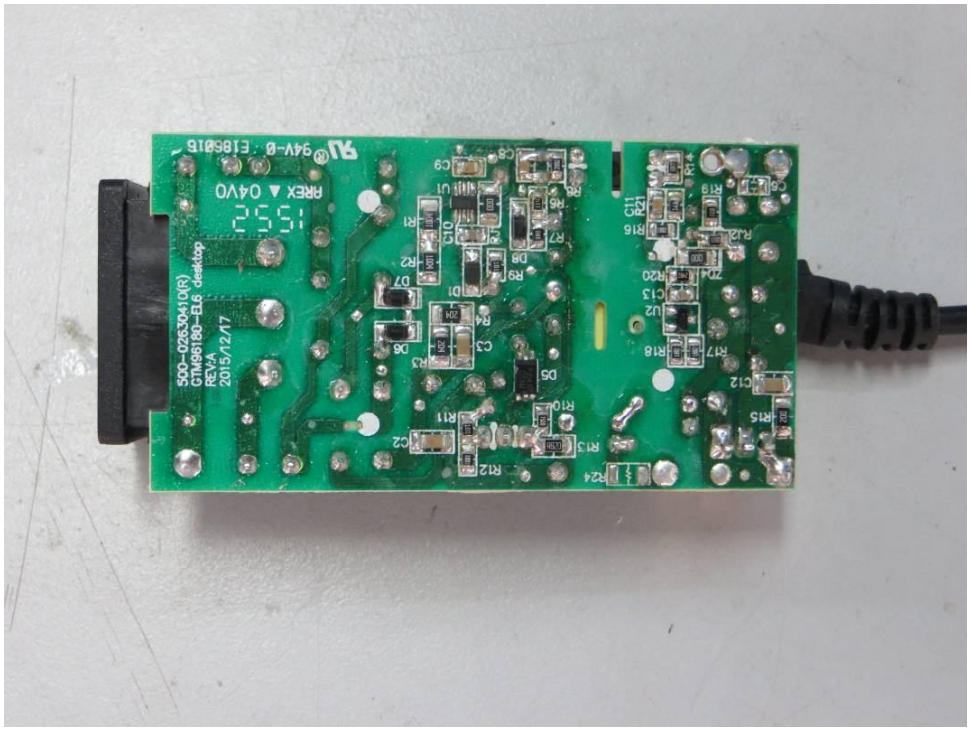

Internal view for GTM96180 series (Interchangeable plug)

Internal view for GTM96180 series (Interchangeable plug)

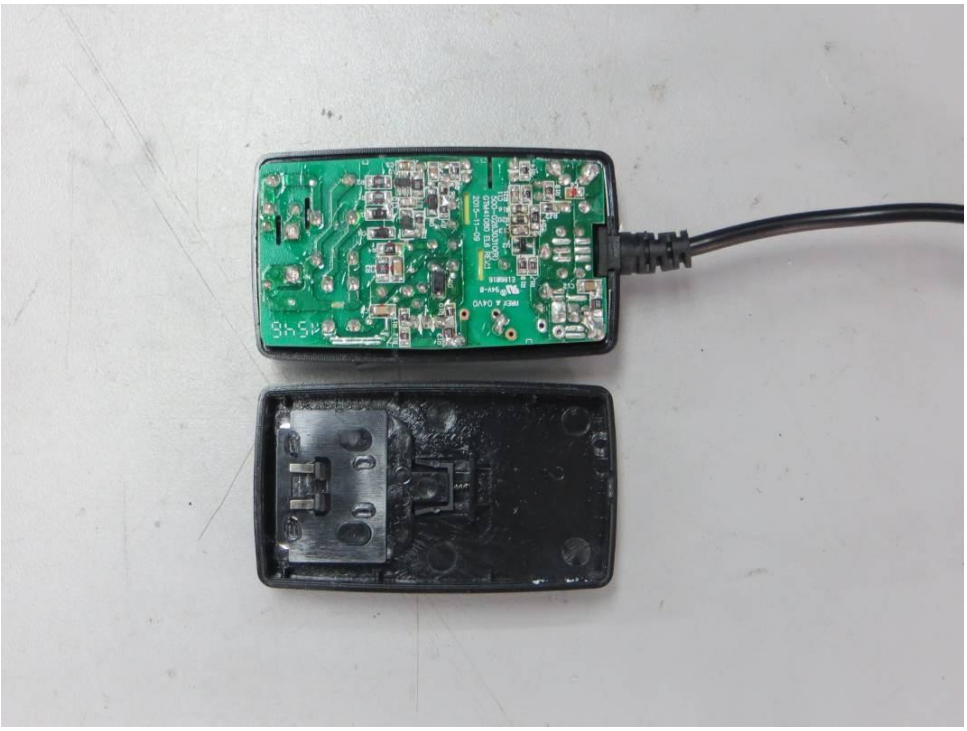

PCB for GTM96180 series (Interchangeable plug)

PCB for GTM96180 series (Interchangeable plug)

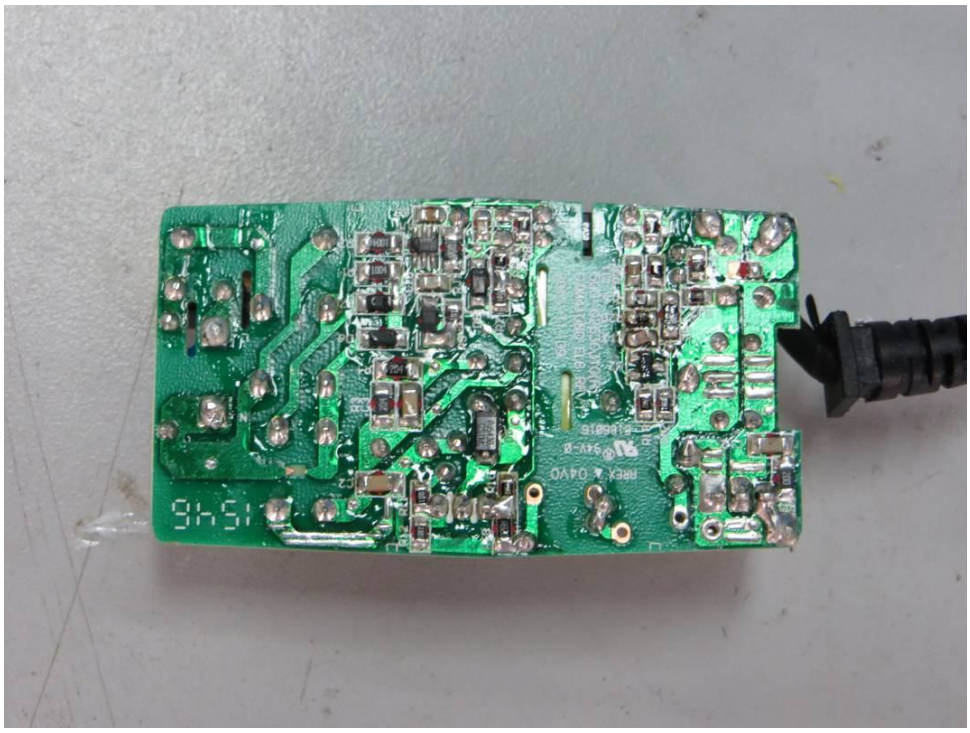

External view for GTM91120 series

External view for GTM91120 series

External view for GTM91120 series

External view for GTM91120 series

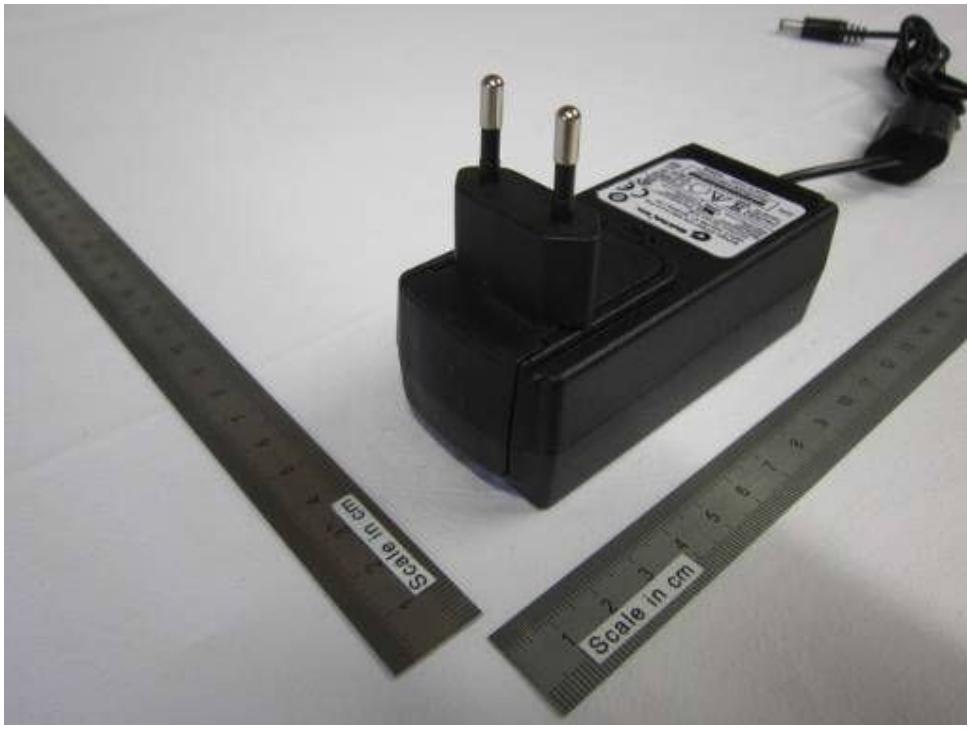

External view for GTM91120 series

External view for GTM91120 series

Internal view for GTM91120 series

Internal view for GTM91120 series

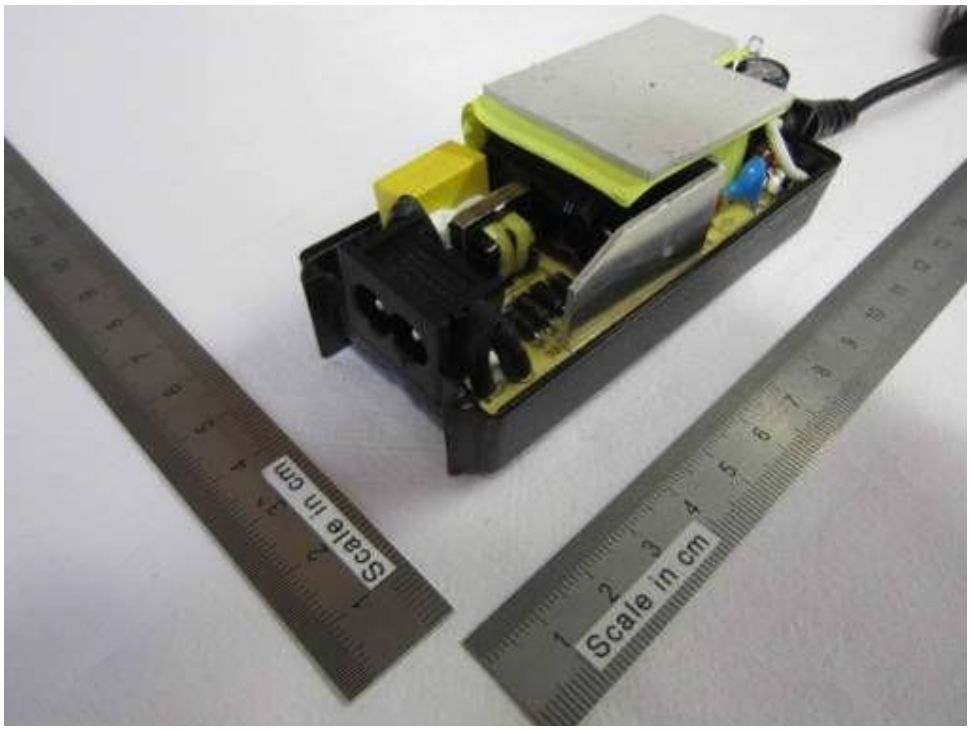

Internal view for GTM91120 series

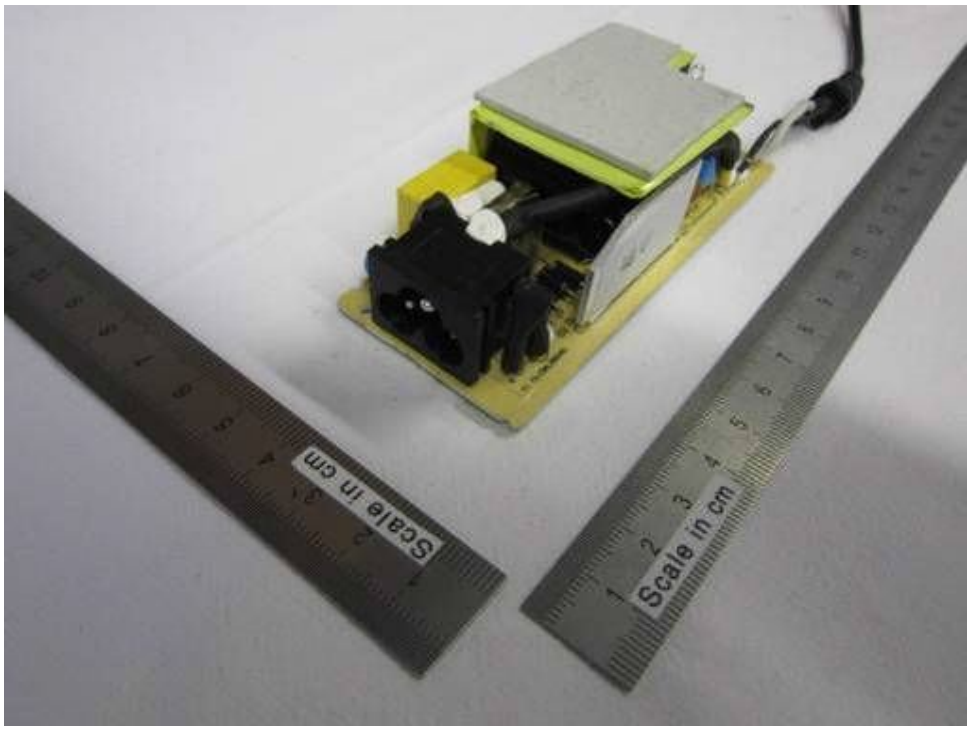

Internal view for GTM91120 series

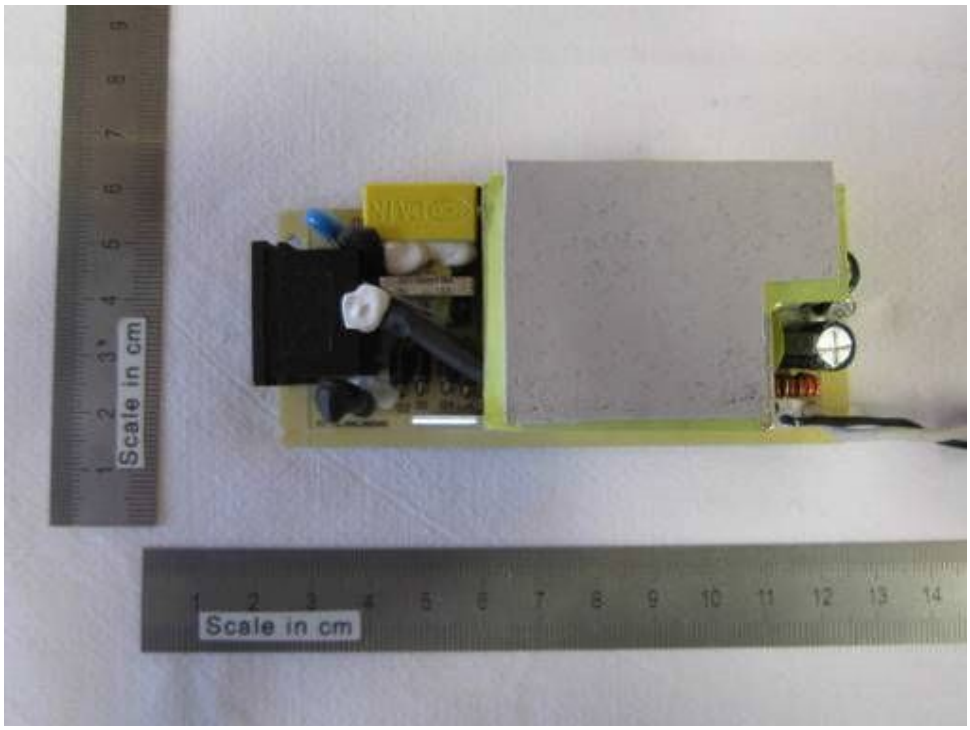

Internal view for GTM91120 series

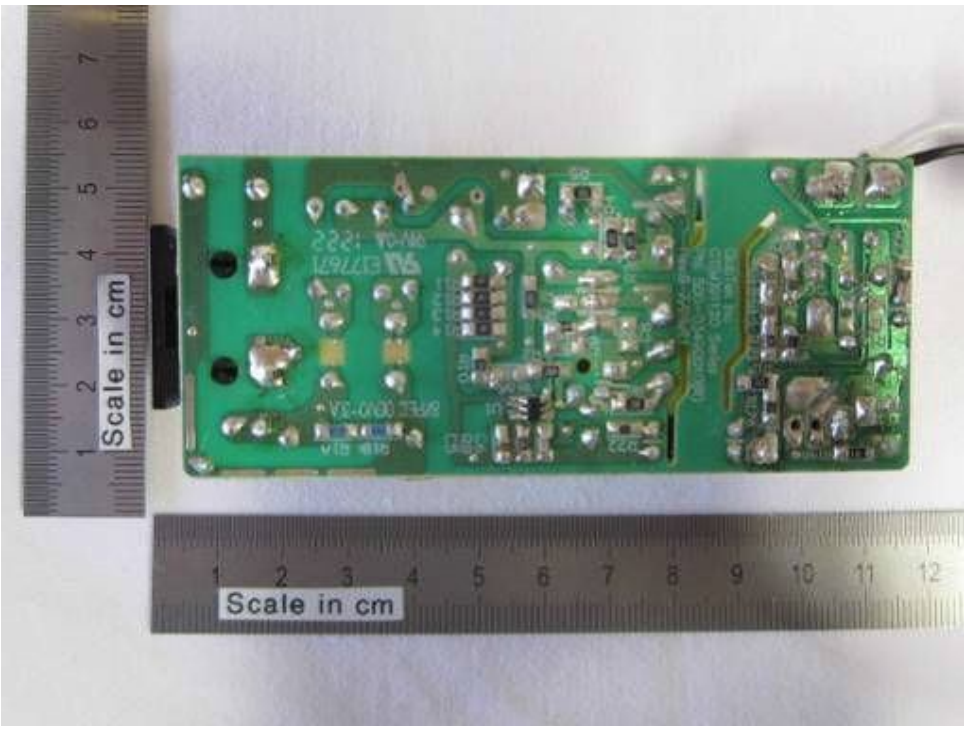

External view for GTM91120 series (Encapsulated)

External view for GTM91120 series (Encapsulated)

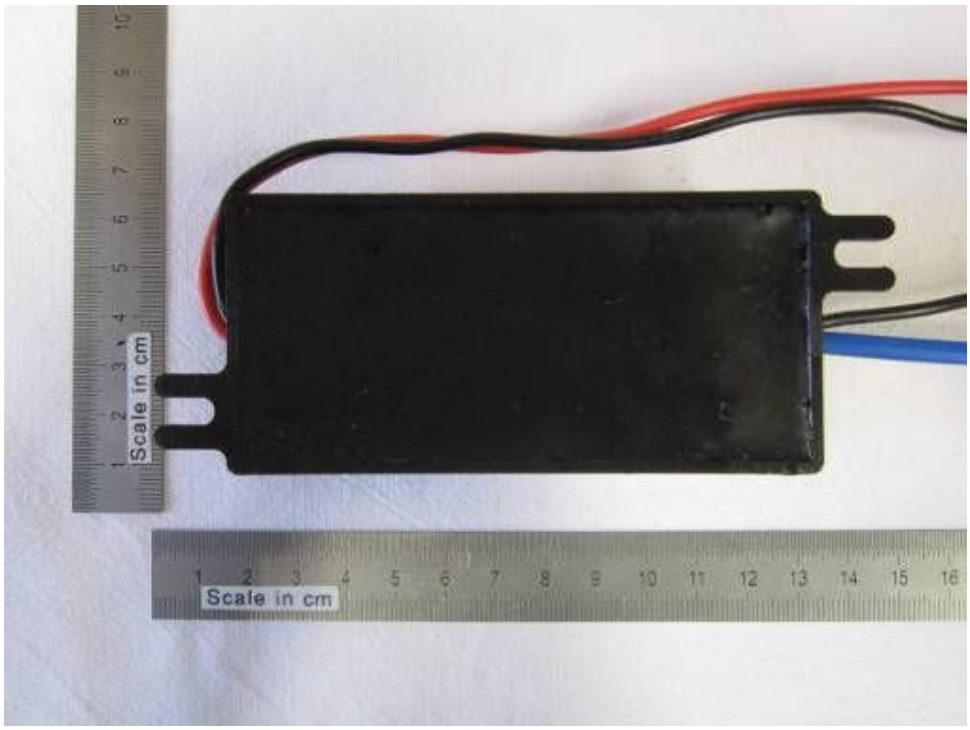

Internal view for GTM91120 series (Encapsulated)

Internal view for GTM91120 series (Encapsulated)

Internal view for GTM91120 series (Encapsulated)

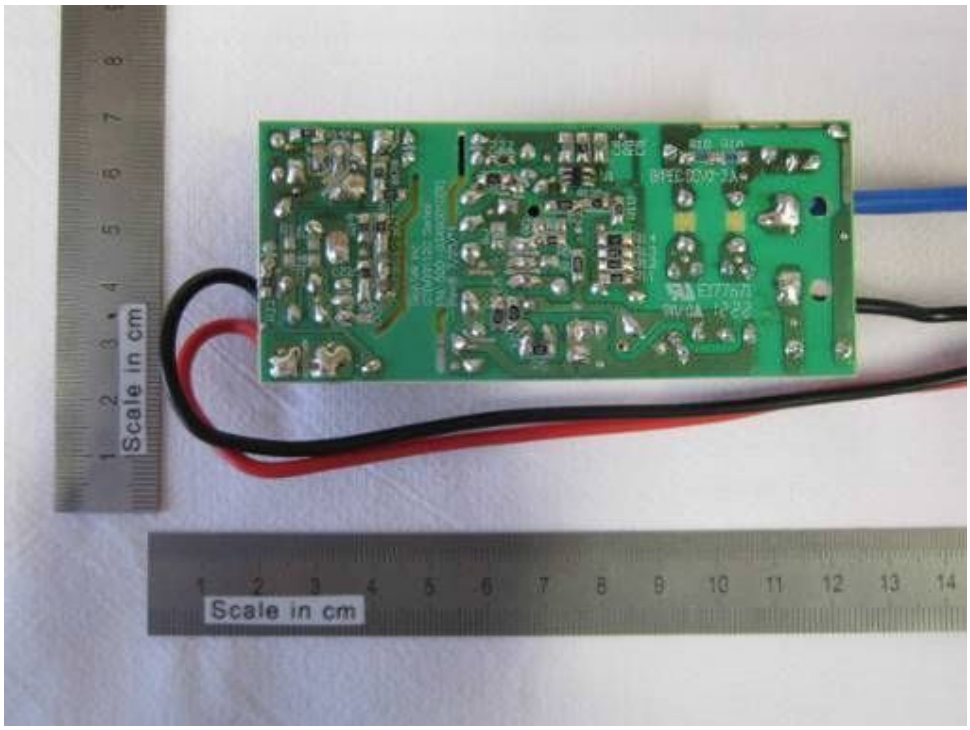

External view for GTM91120 series (Open frame)

External view for GTM91120 series (Open frame)

External view for GTM91120 series (Open frame)

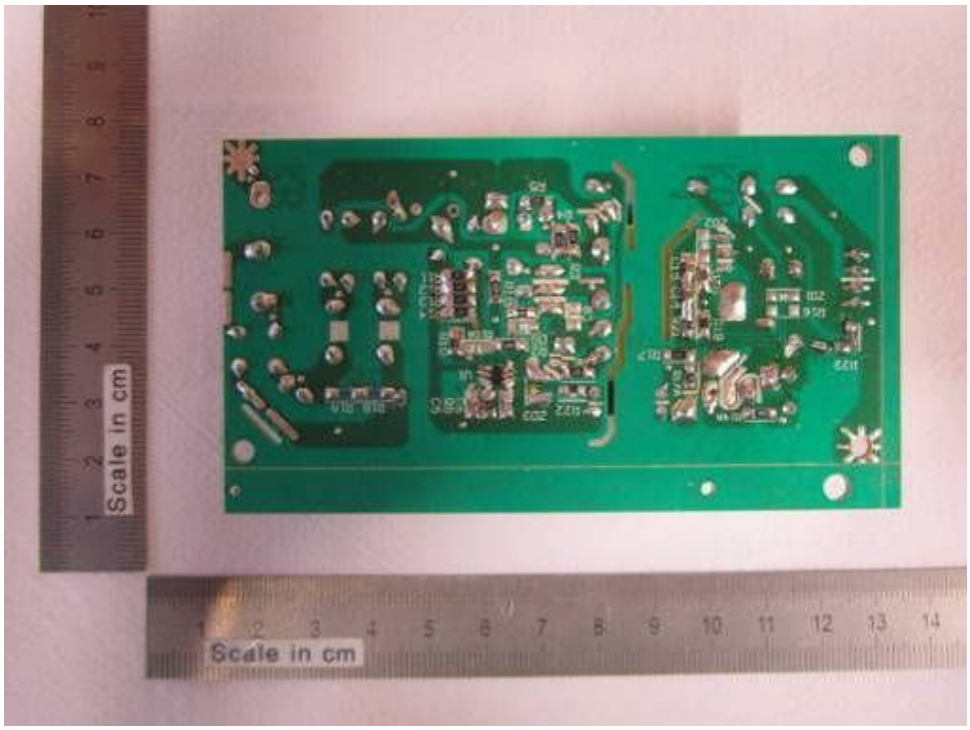

External view for GTM91128LI1CELL, GTM91128LI2CELL, GTM91128LI3CELL

External view for GTM91128LI1CELL, GTM91128LI2CELL, GTM91128LI3CELL

External view for GTM91128LI1CELL, GTM91128LI2CELL, GTM91128LI3CELL

External view for GTM91128LI1CELL, GTM91128LI2CELL, GTM91128LI3CELL

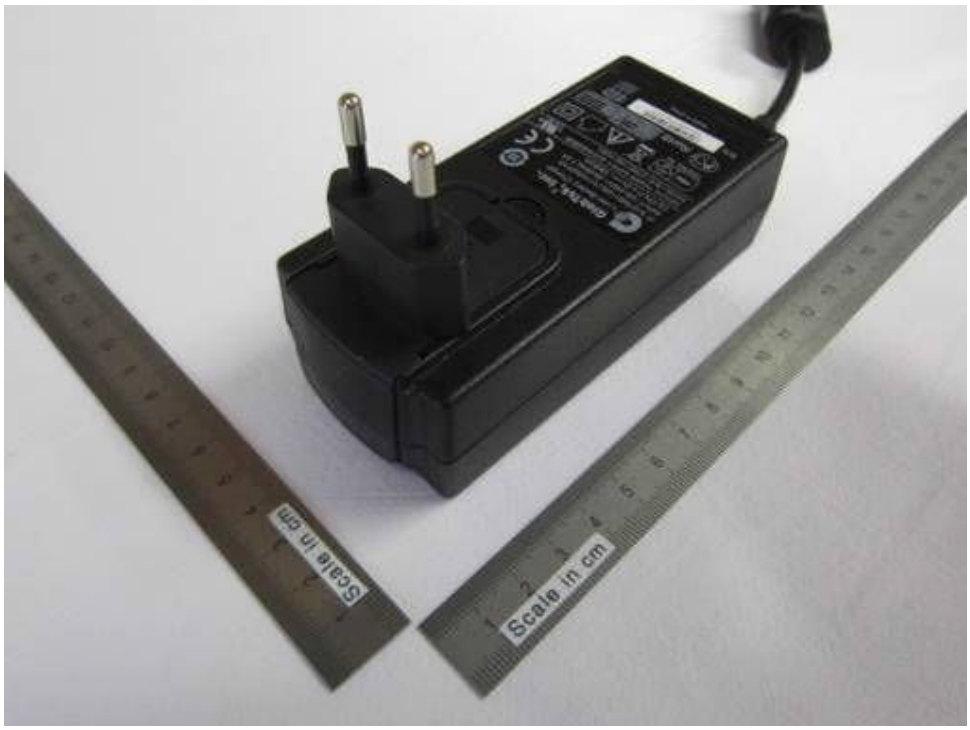

Internal view for GTM91128LI1CELL, GTM91128LI2CELL, GTM91128LI3CELL

PCB for GTM91128LI1CELL, GTM91128LI2CELL, GTM91128LI3CELL

PCB for GTM91128LI1CELL, GTM91128LI2CELL, GTM91128LI3CELL

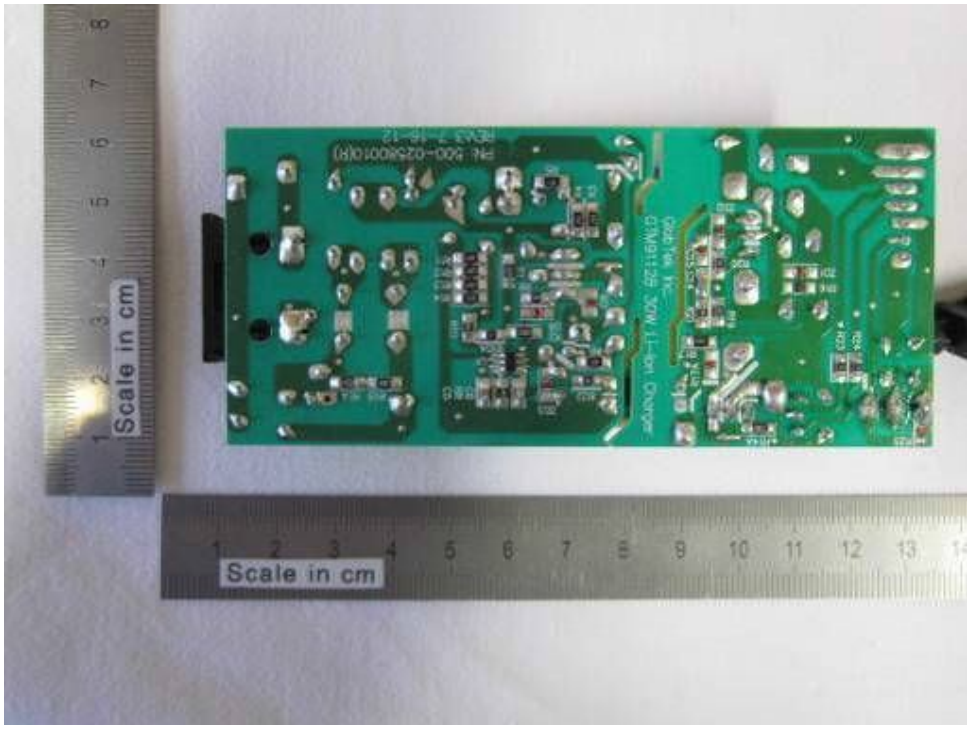

Transformer (EE22)

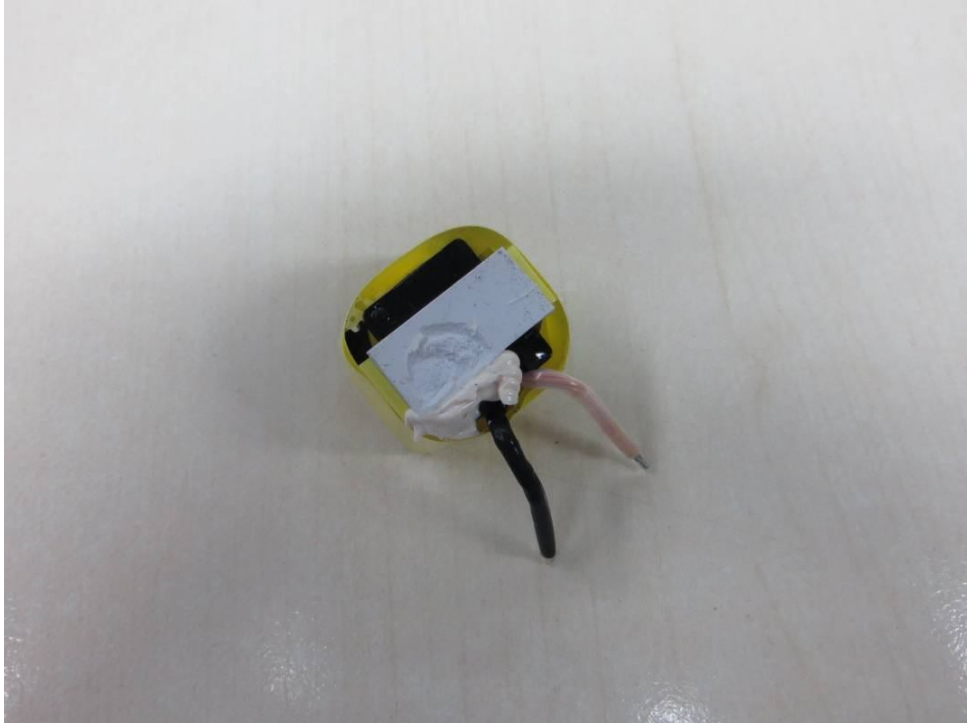

Transformer (EE22)

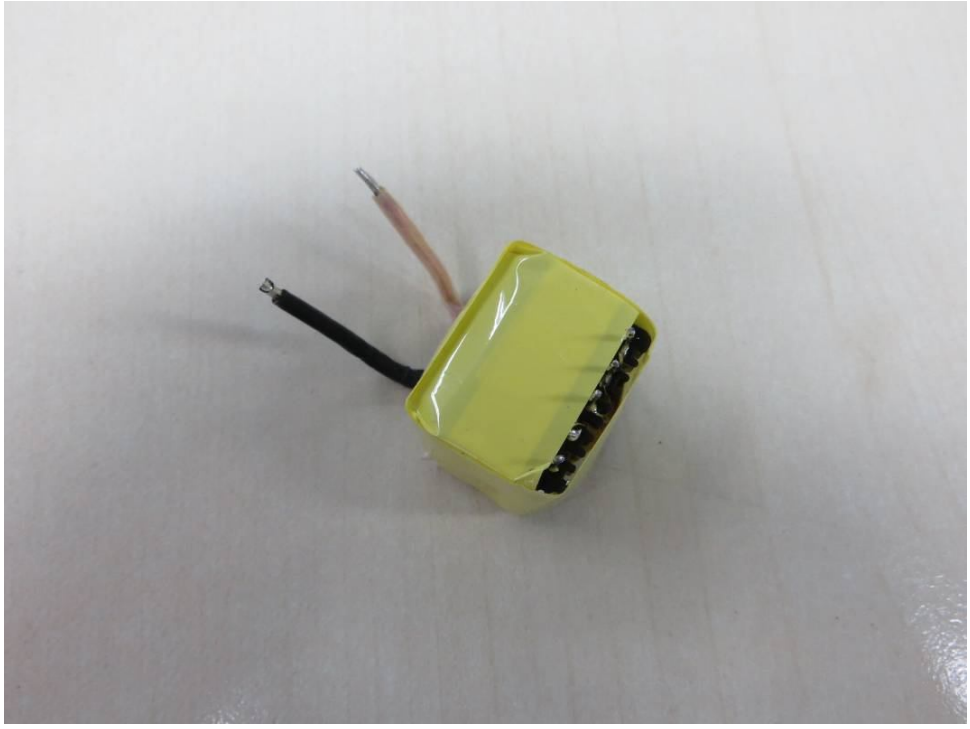

Transformer (EE22)

Transformer (EE22)

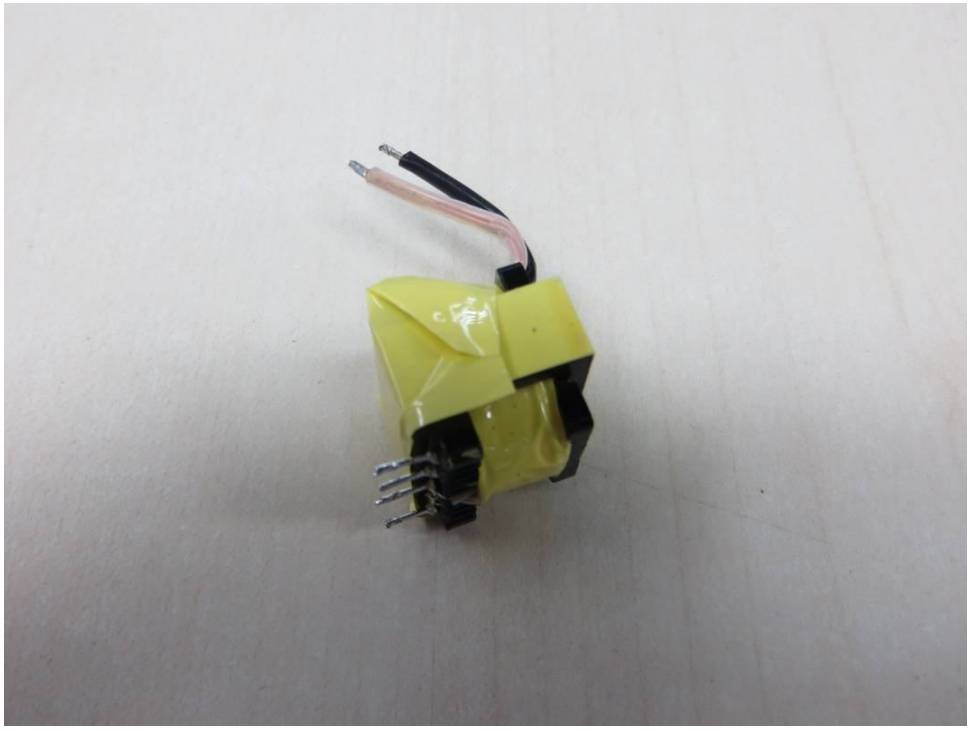

Transformer (EE22)

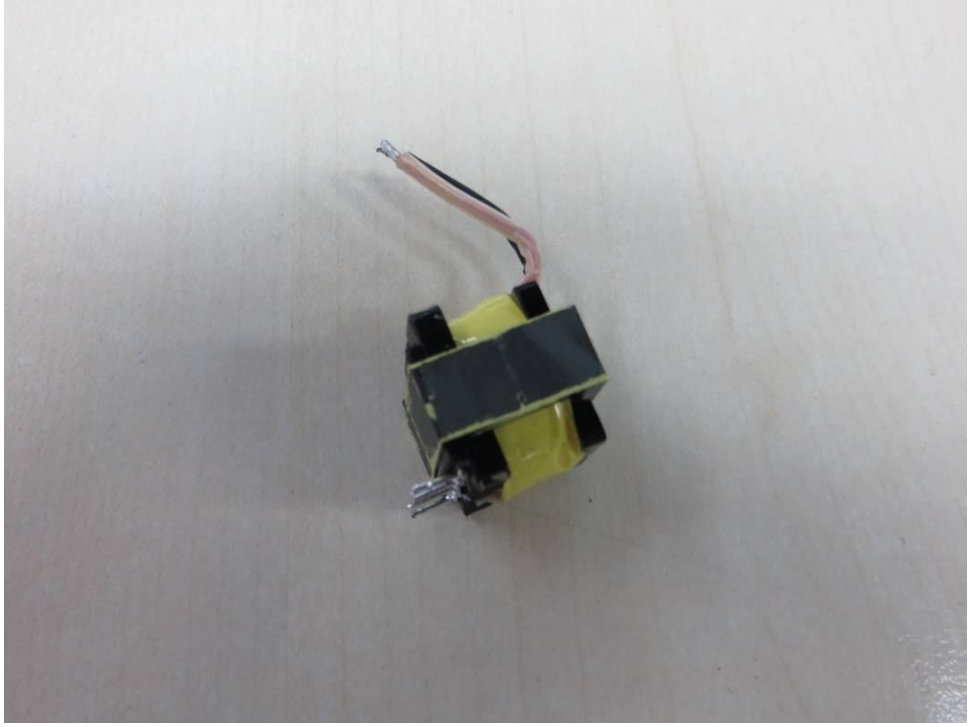

Transformer (EE22)

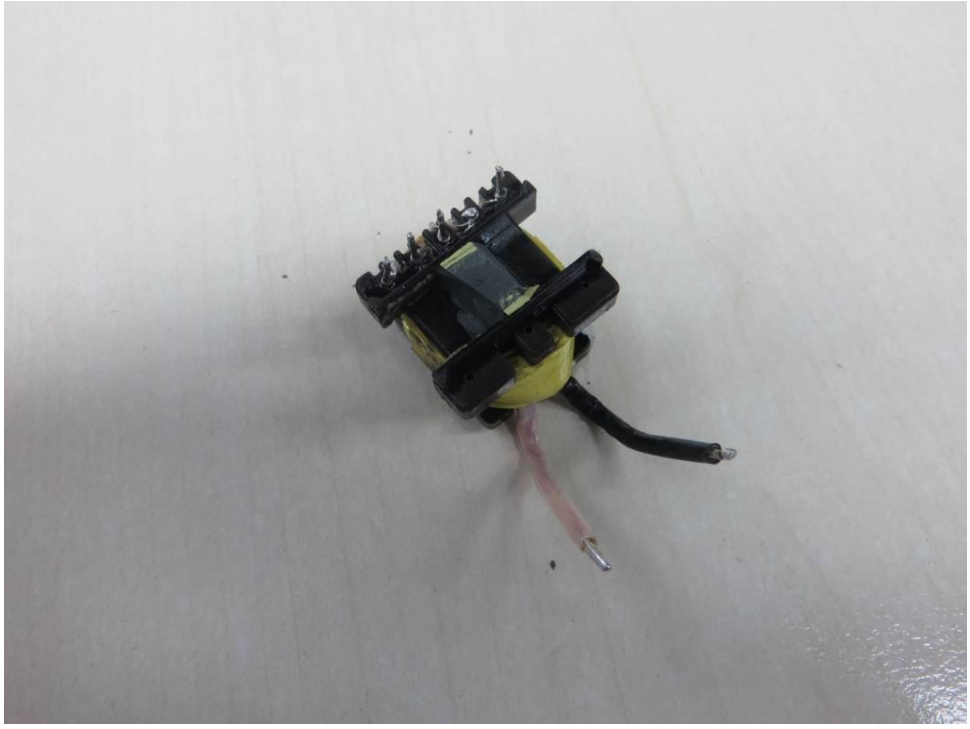

Transformer (EE22)

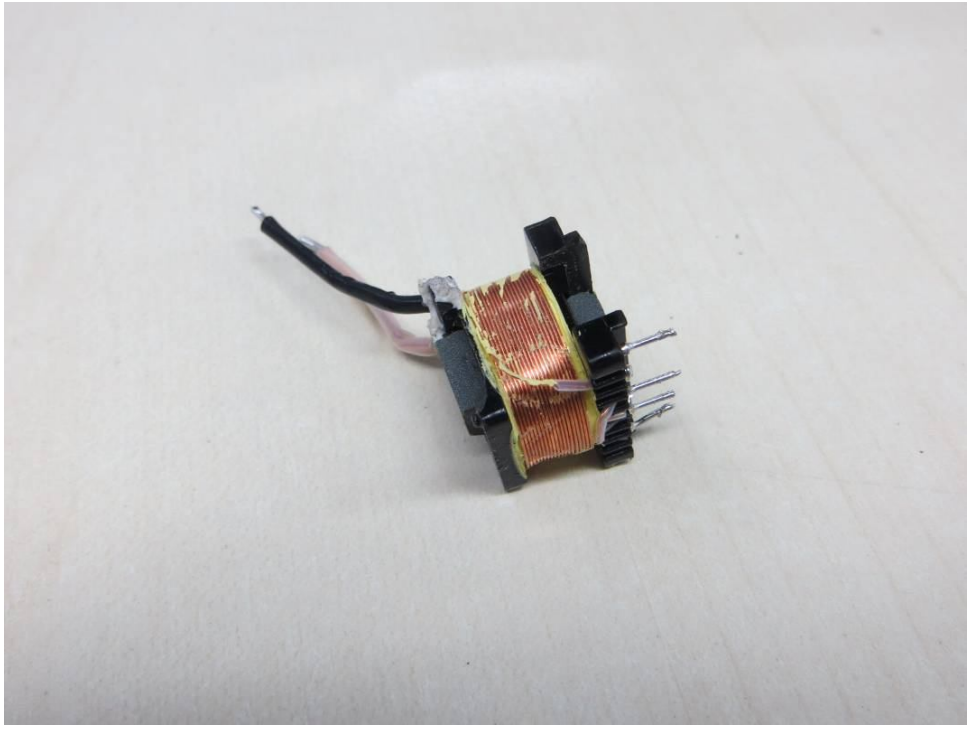

Transformer (EE22)

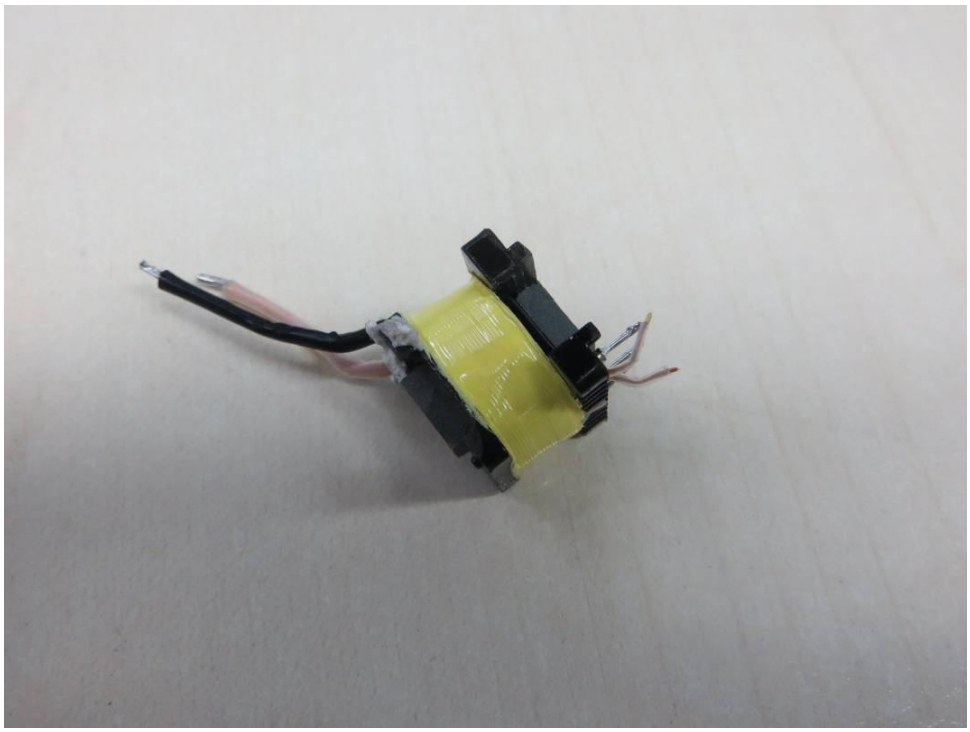

Transformer (EE22)

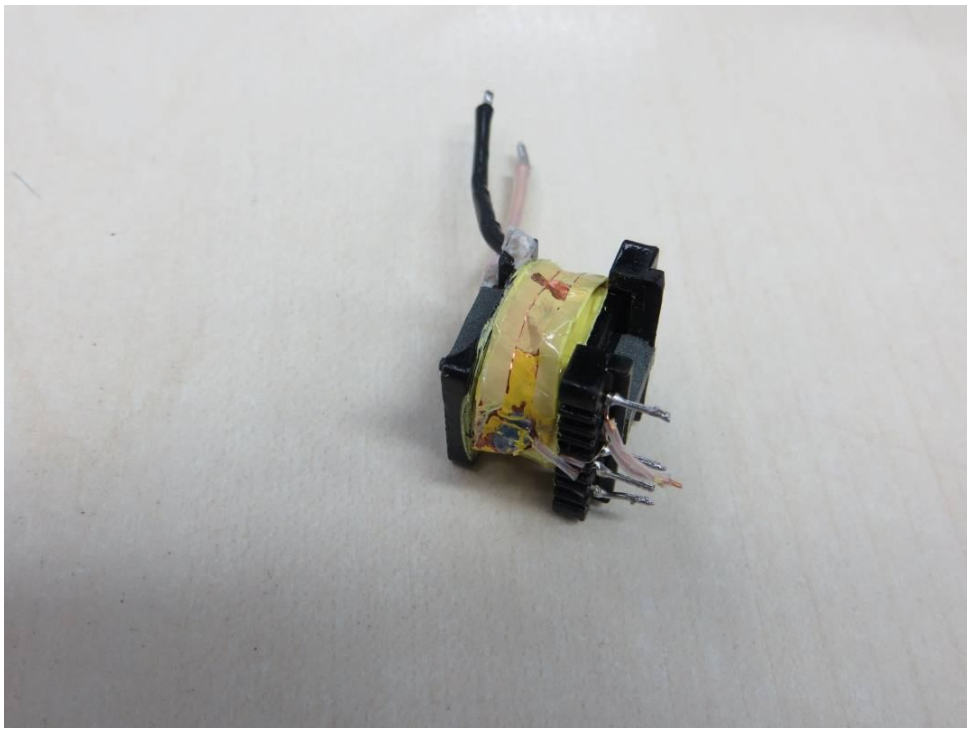

Transformer (EE22)

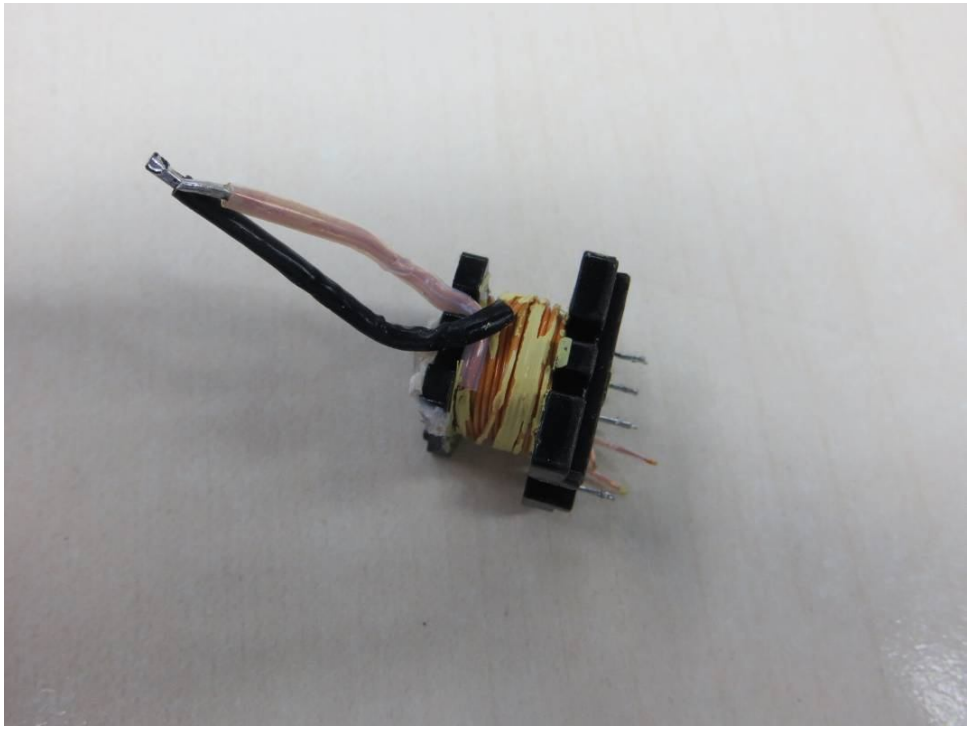

Transformer (EE22)

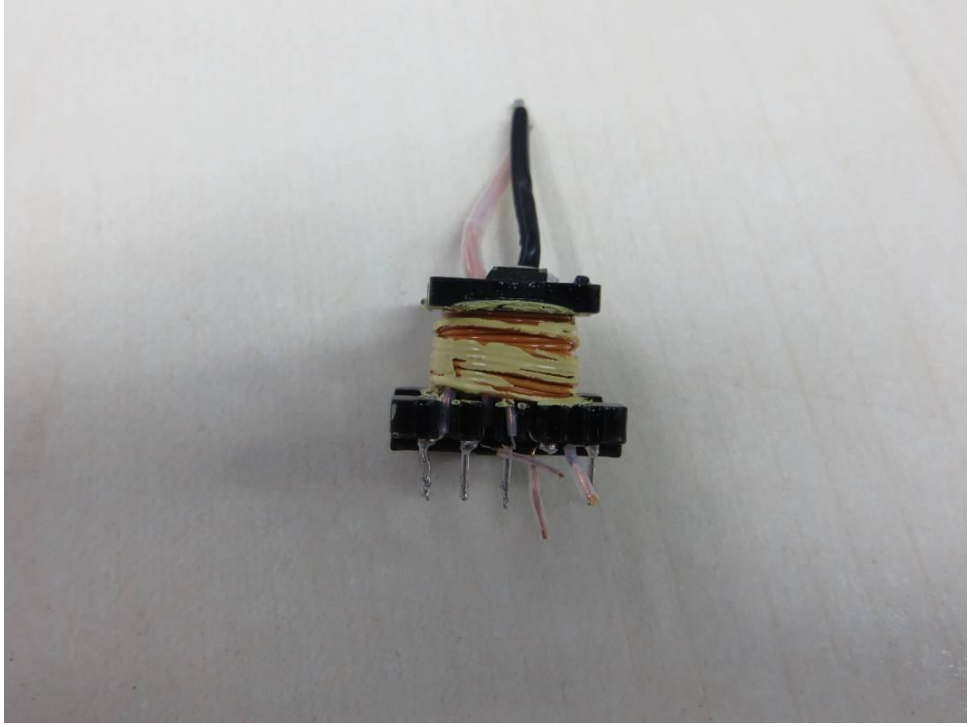

Transformer (EE22)

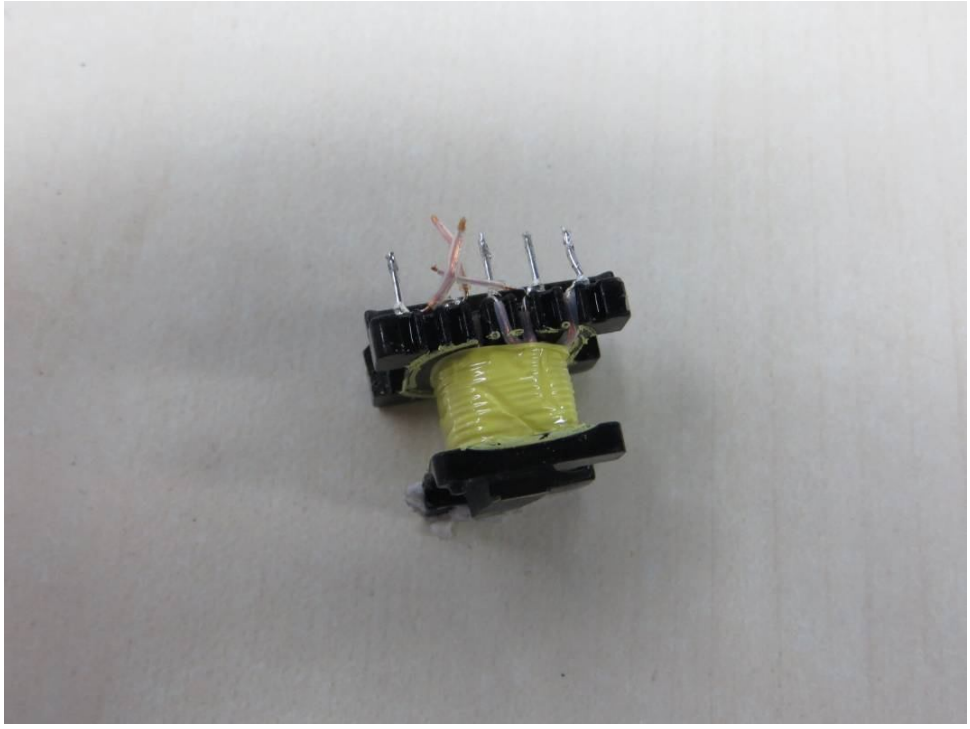

Transformer (EE22)

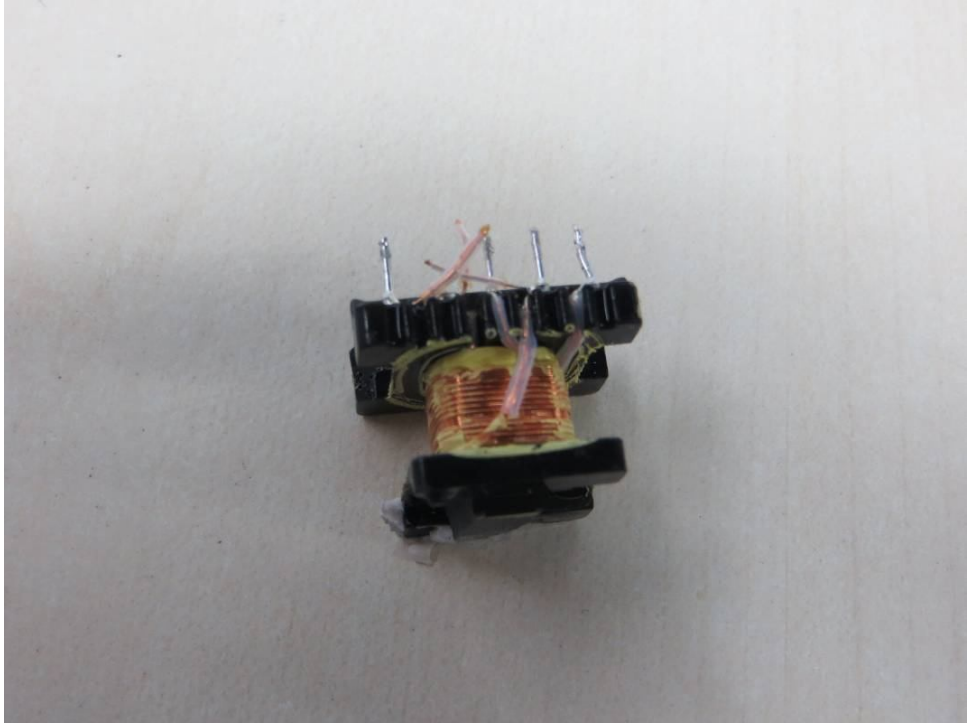

Transformer (EE22)

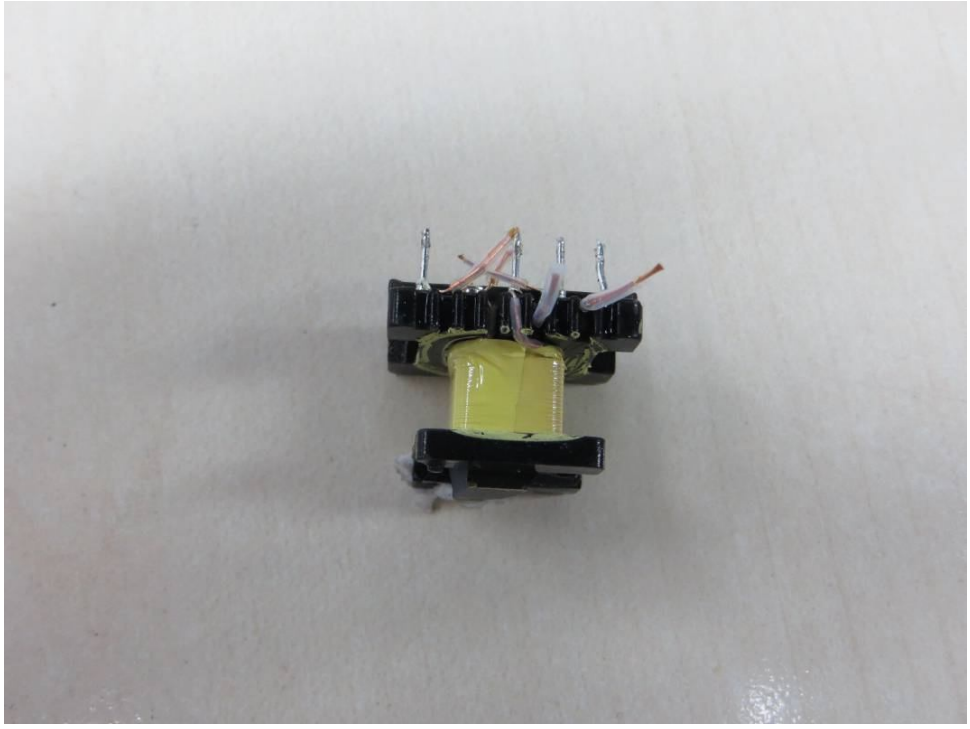

Transformer (EE22)

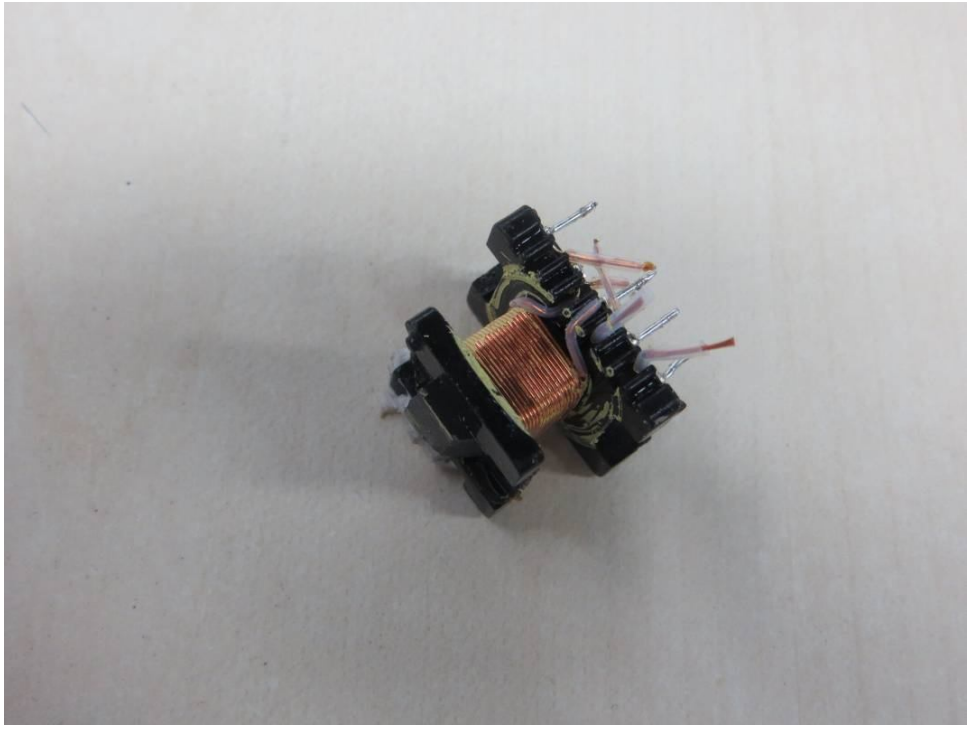

Transformer (EE22)

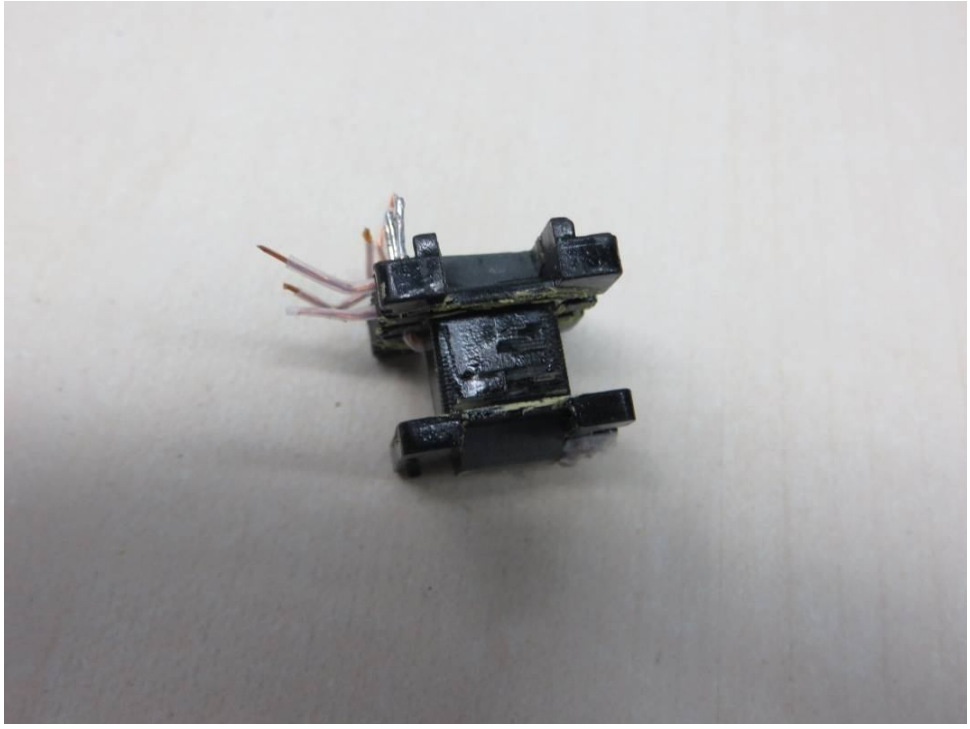

Transformer (EE16)

Transformer (EE16)

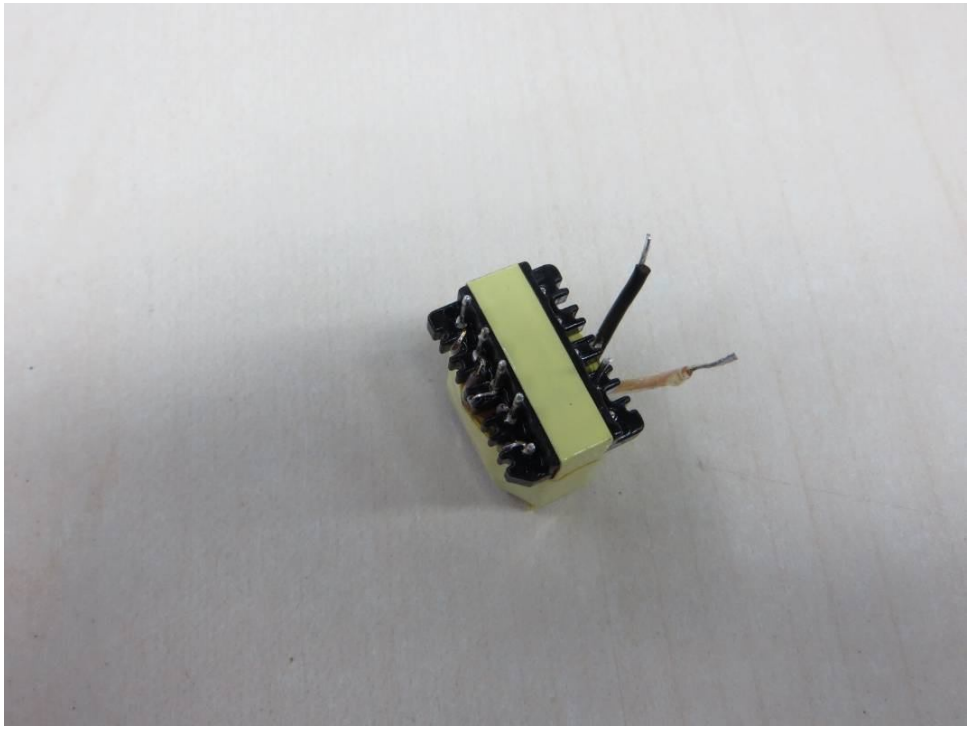

Transformer (EE16)

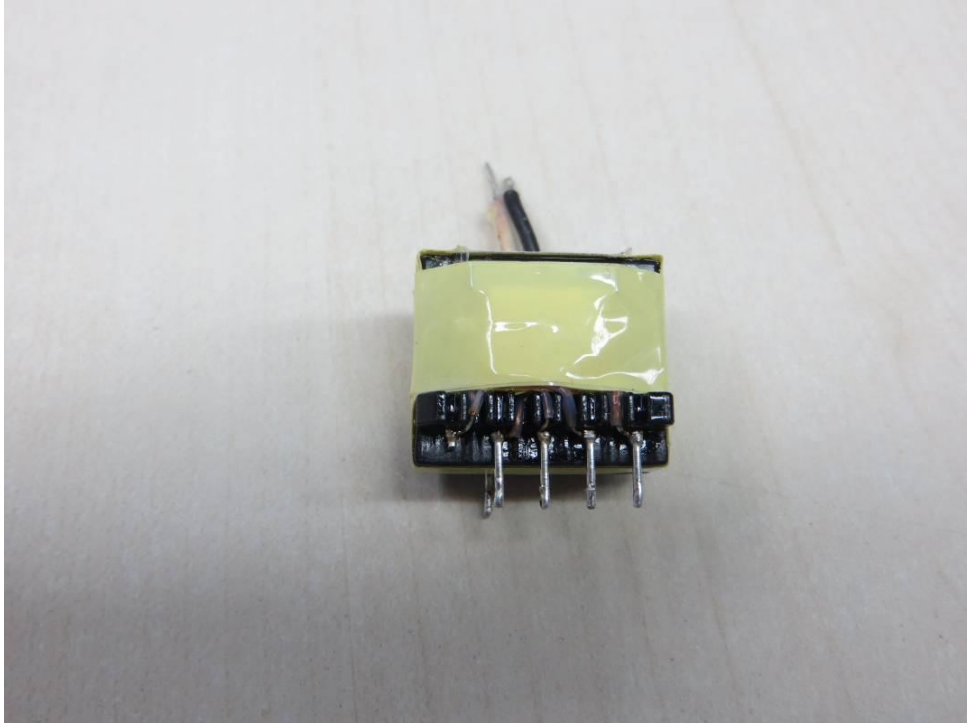

Transformer (EE16)

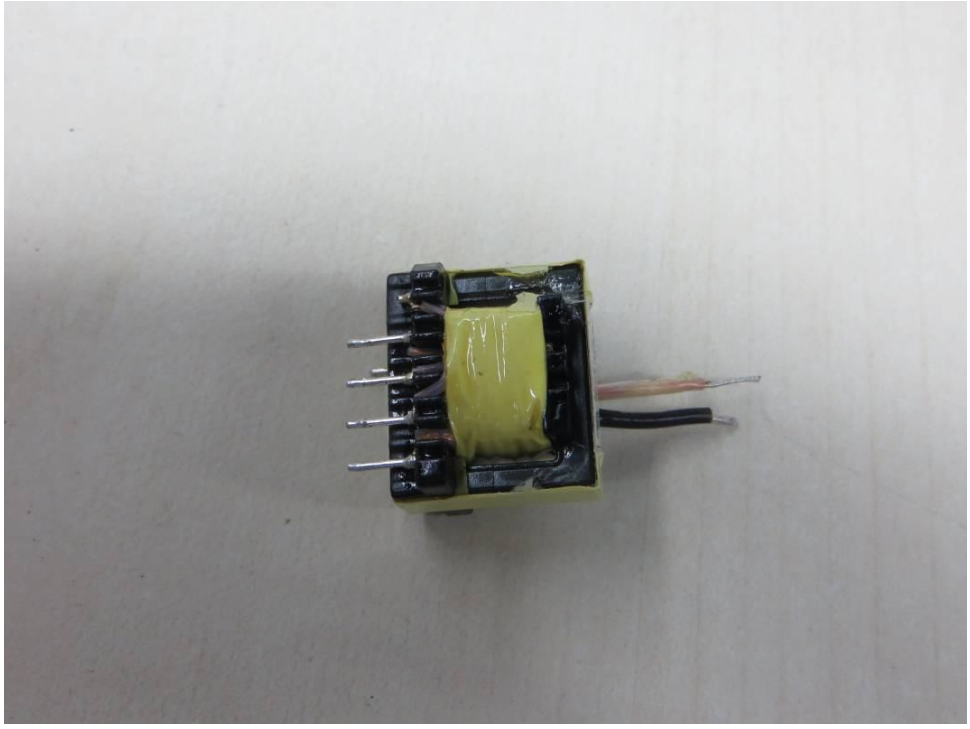

Transformer (EE16)

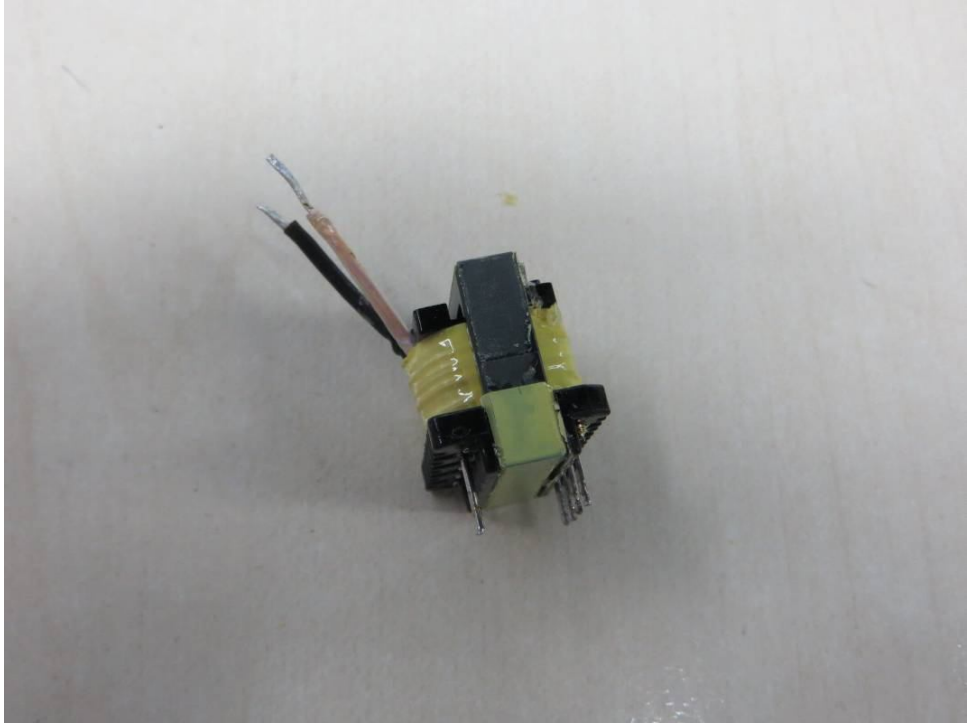

Transformer (EE16)

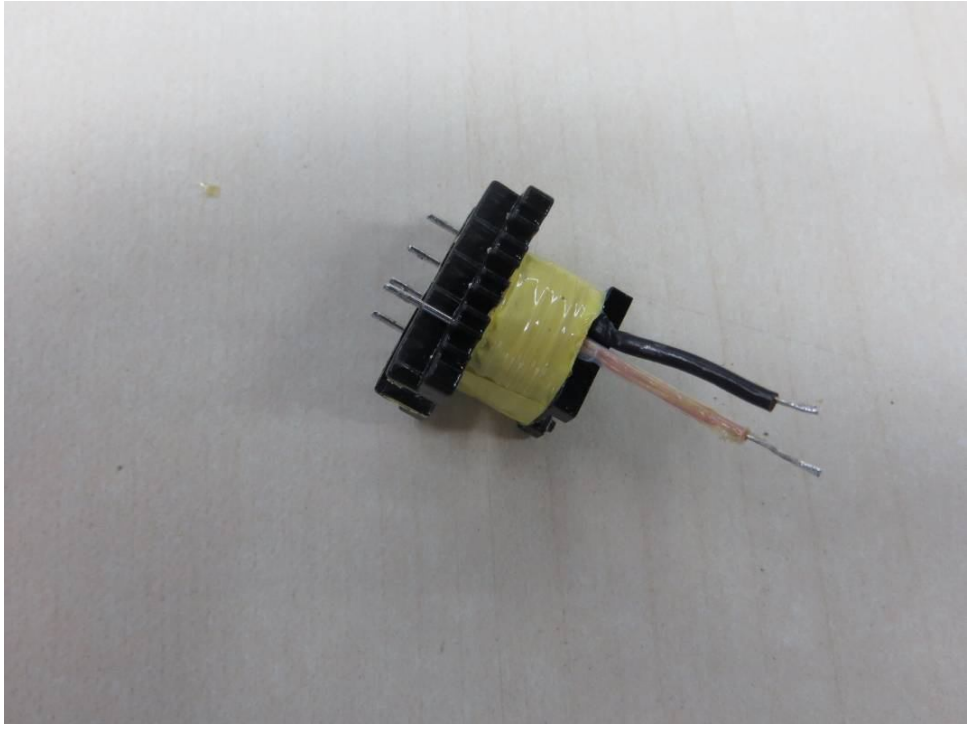

Transformer (EE16)

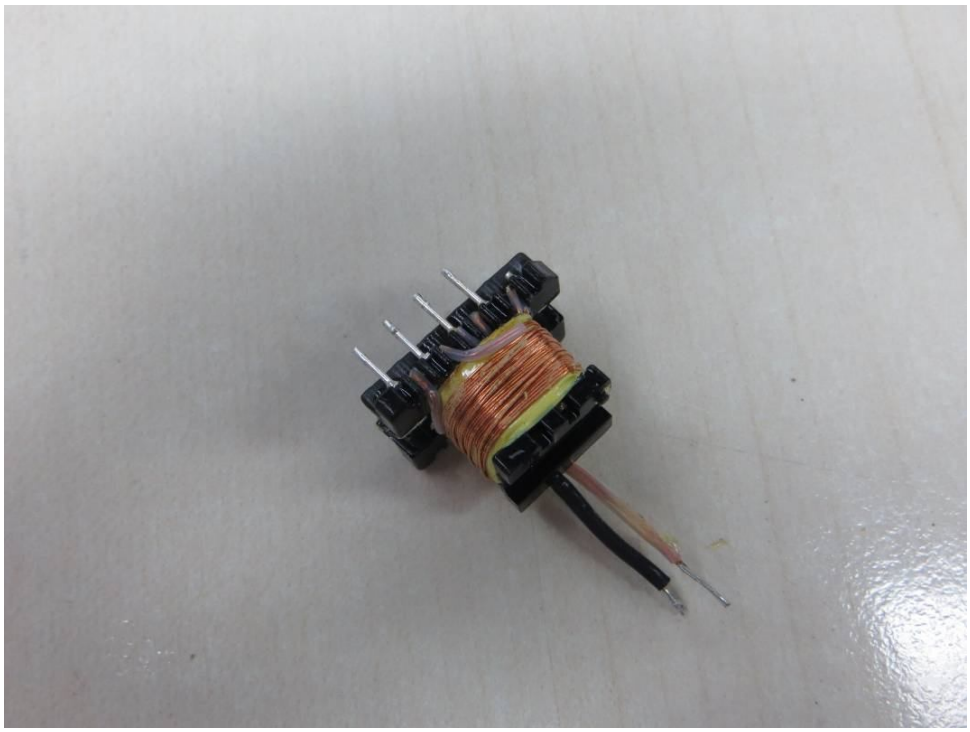

Transformer (EE16)

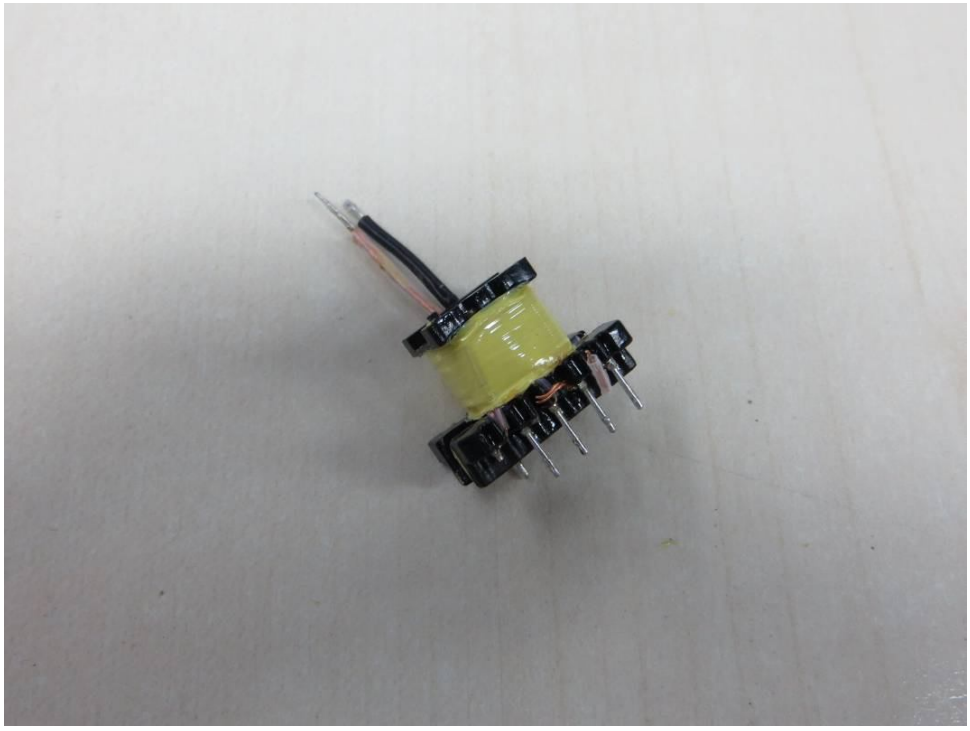

Transformer (EE16)

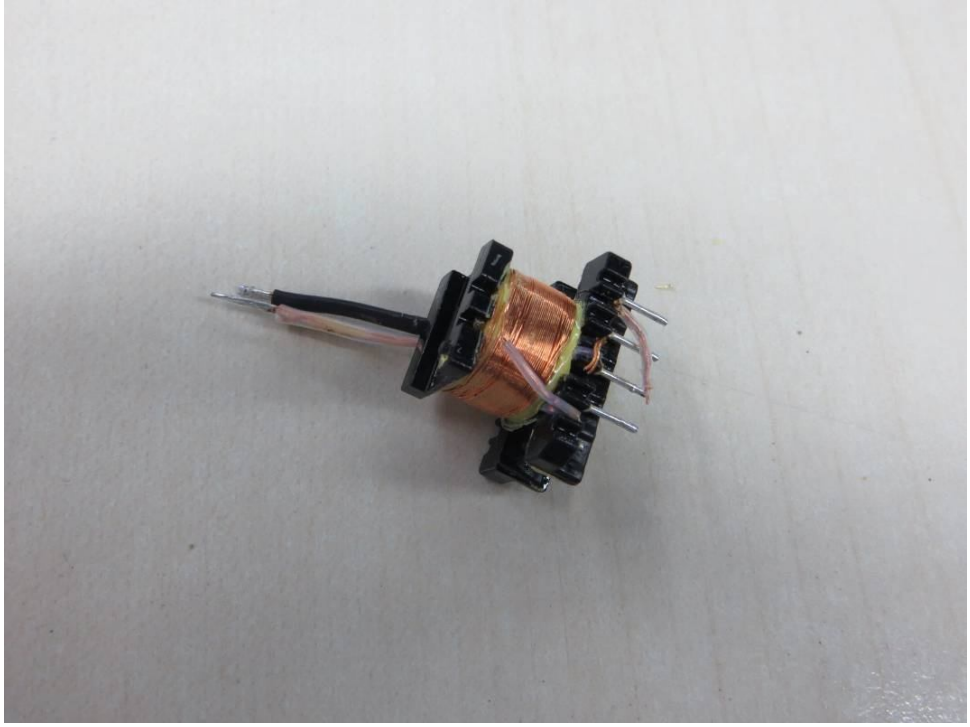

Transformer (EE16)

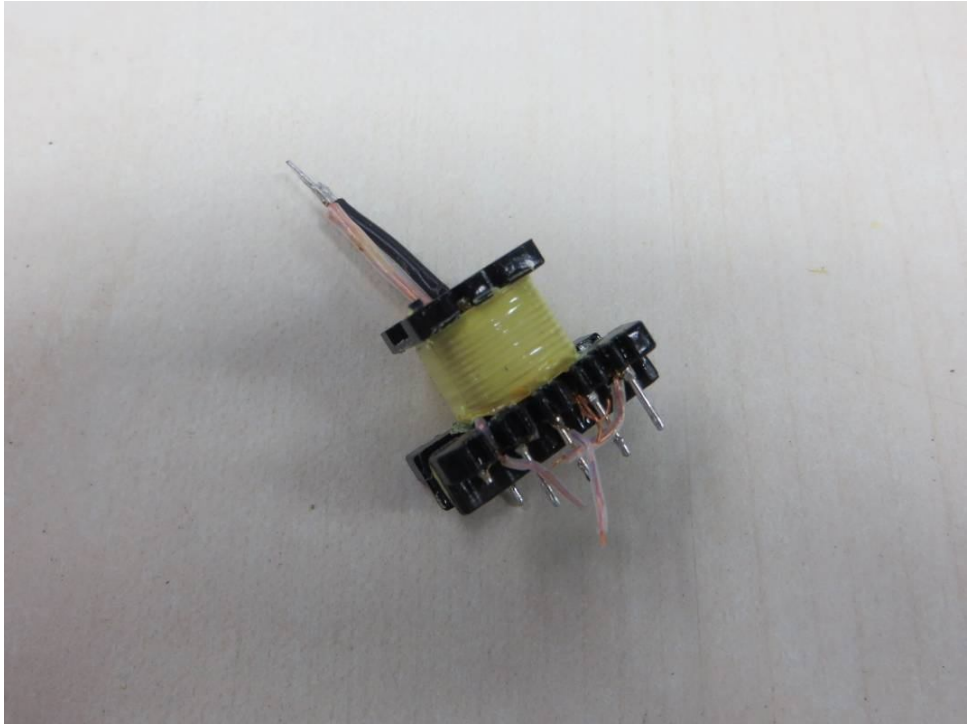

Transformer (EE16)

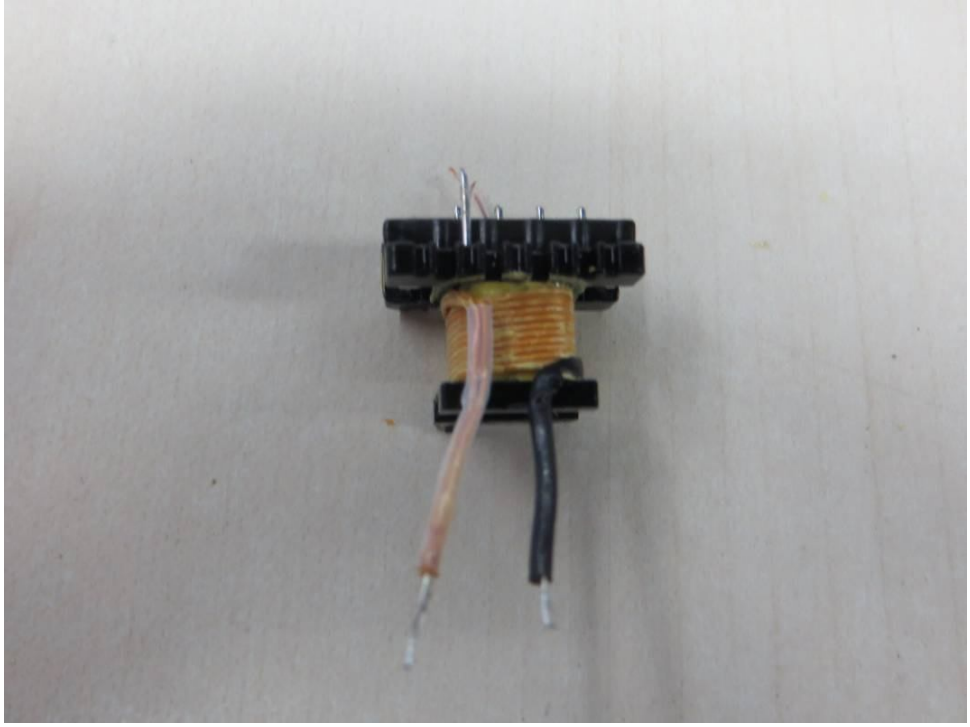

Transformer (EE16)

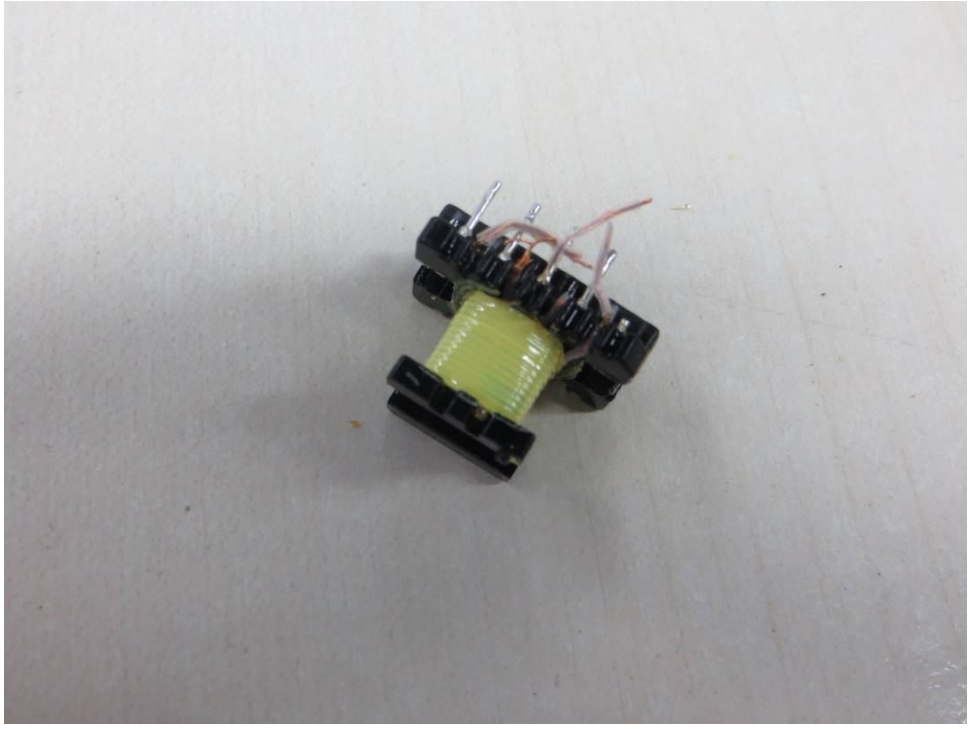

Transformer (EE16)

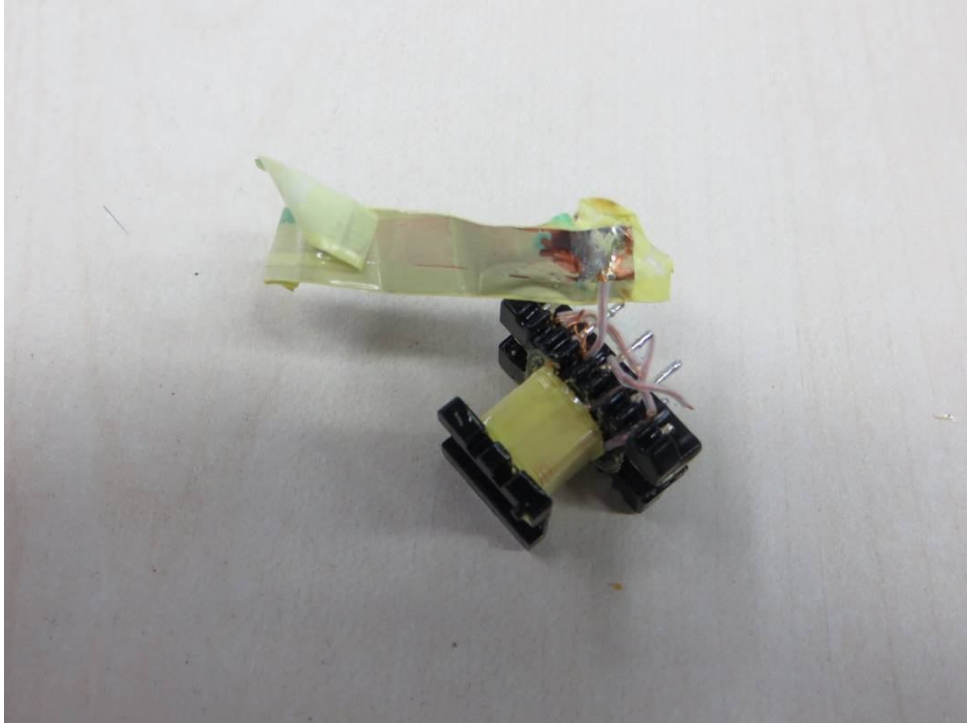

Transformer (EE16)

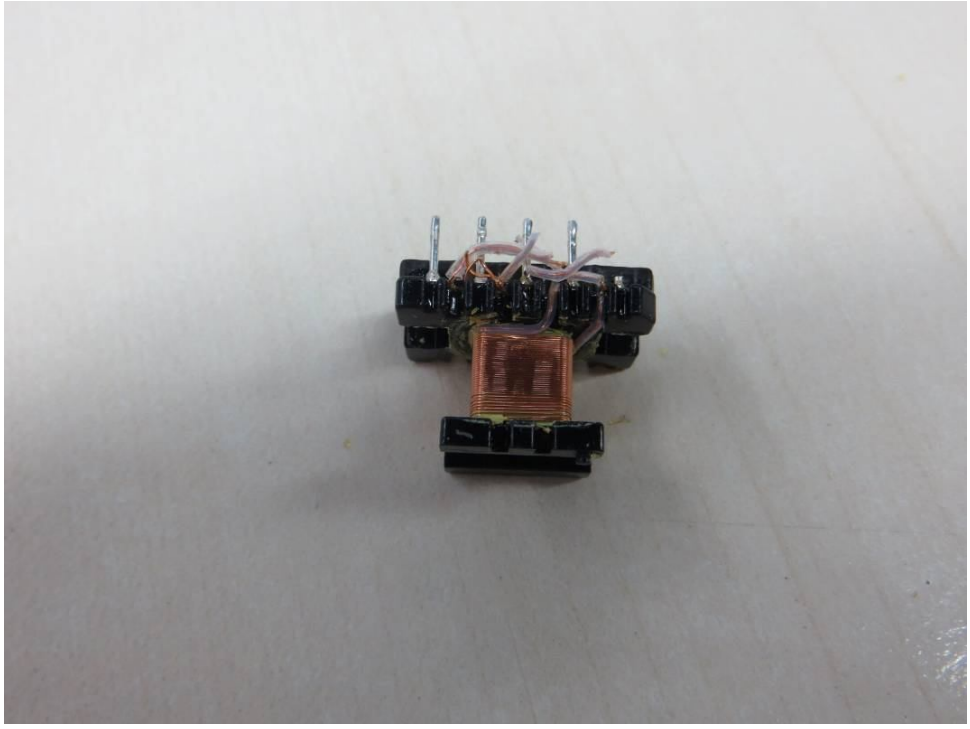

Transformer (EE16)

ATTACHMENT Circuit Diagram / Layout

GTM91120

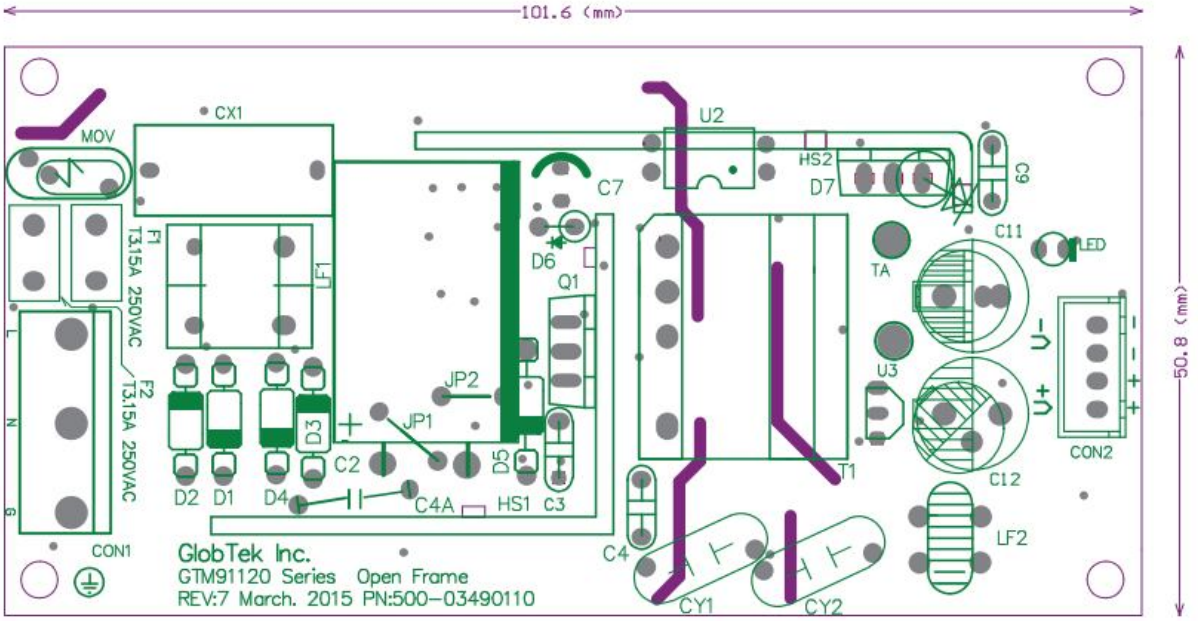

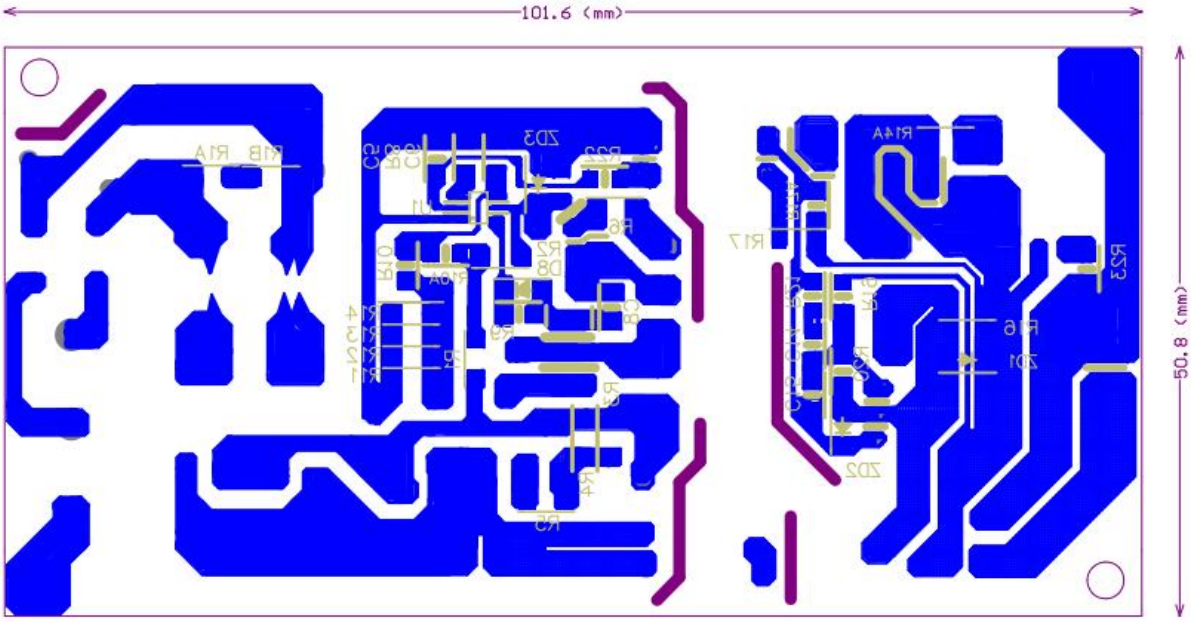

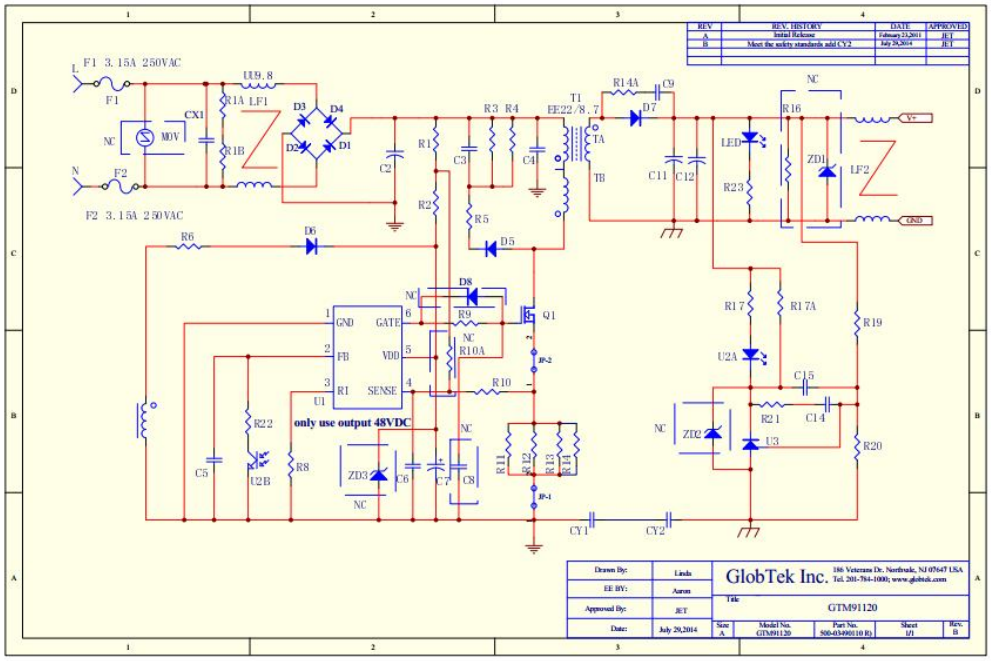
REV. HISTORY
Initial Release
Meet the safety standards add CY2
F1 3.15A 250VAC
F2 3.15A 250VAC
only use output 48VDC
GlobTek Inc.
GTM91120

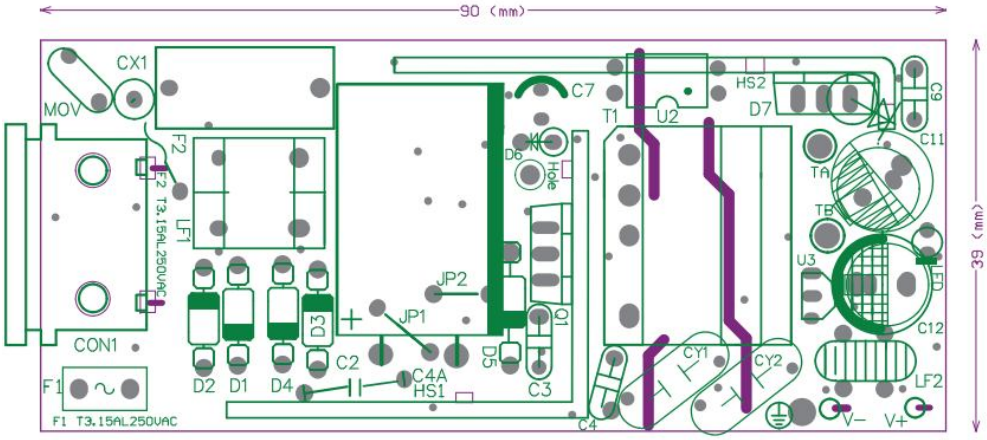
90 (mm)
39 (mm)
F1 T3.15AL250VAC
F2 T3.15AL250VAC

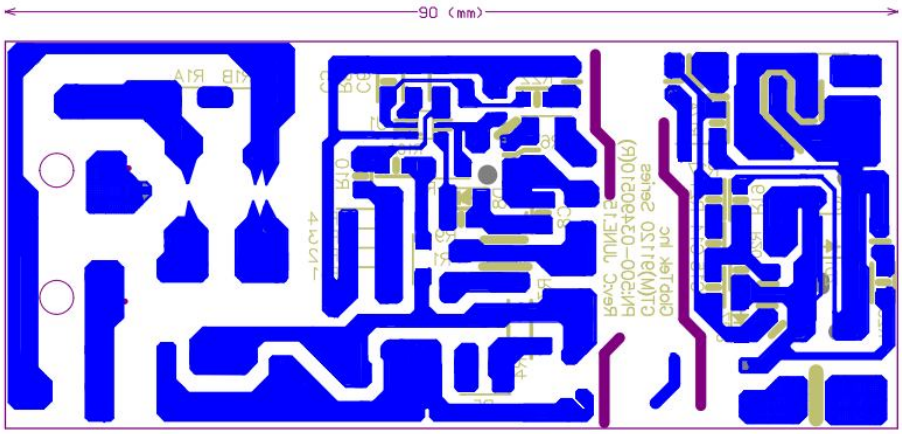
90 (mm)
39 (mm)

GTM96300

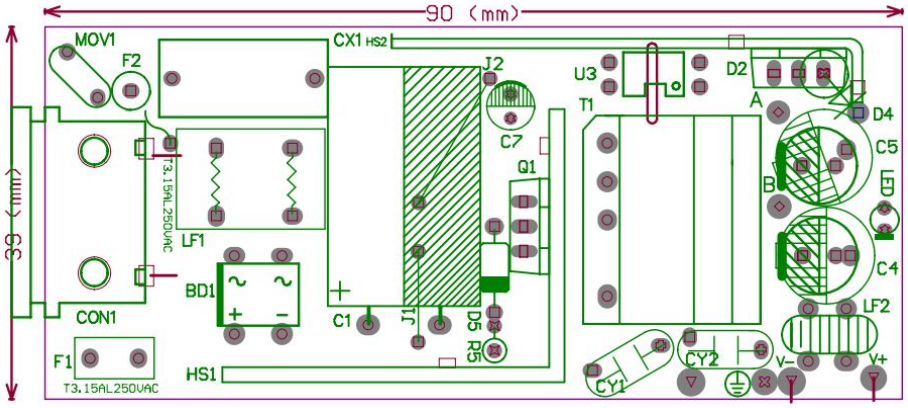
90 (mm)
39 (mm)
MOV1
F2
CX1
HS2
J2
U3
D2
T1
A
D4
C7
Q1
C5
B
LED
T3.15AL250VAC
LF1
C4
BD1
LF2
CON1
C1
J1
D5
R5
F1
HS1
CY2
V-
V+
CY1
T3.15AL250VAC

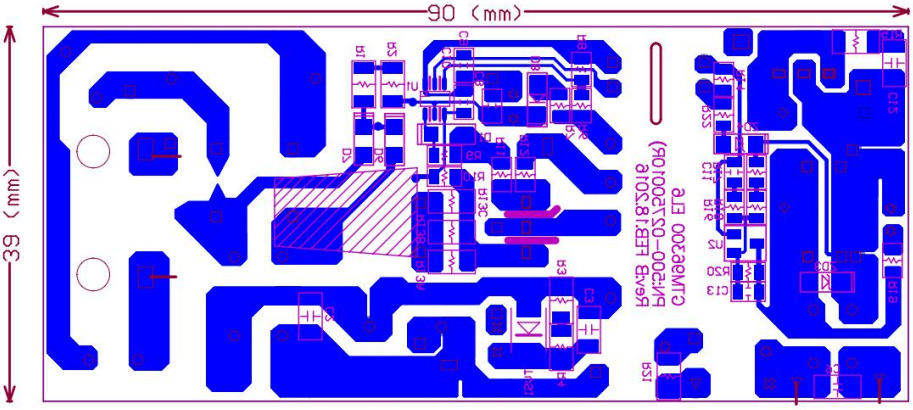
90 (mm)
39 (mm)

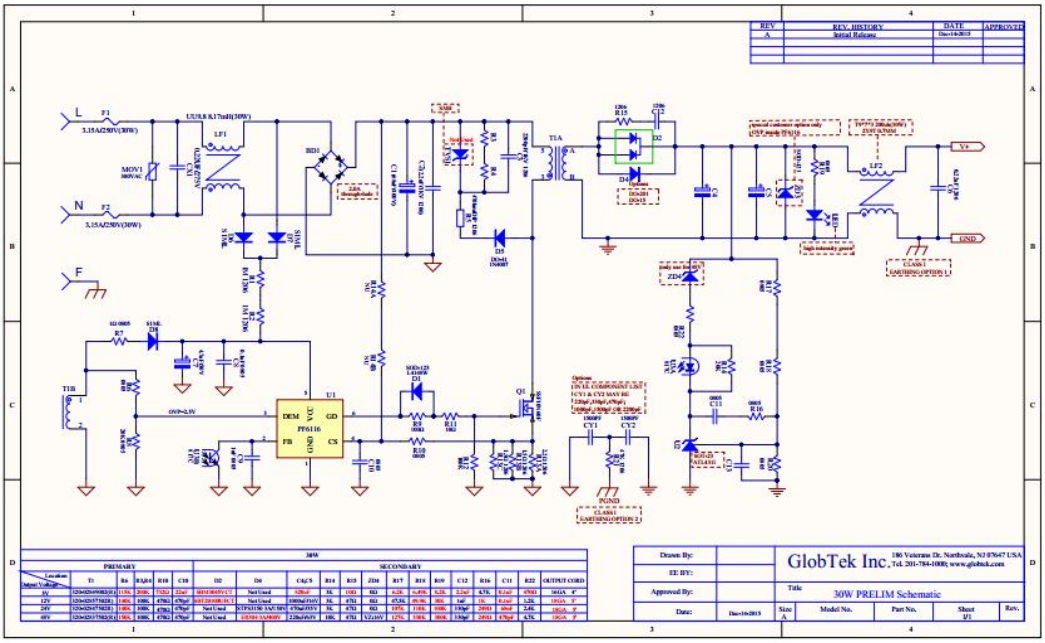
REV
REV. HISTORY
DATE
APPROVED
Initial Release
L
N
F
MOV1
LF1
BD1
T1A
LF2
V+
GND
U1
PF6116
Q1
CY1
CY2
PGND
GlobTek Inc.
30W PRELIM Schematic
Drawn By:
EE BY:
Approved By:
Date:
Size
Model No.
Part No.
Sheet
Rev.

GTM96180

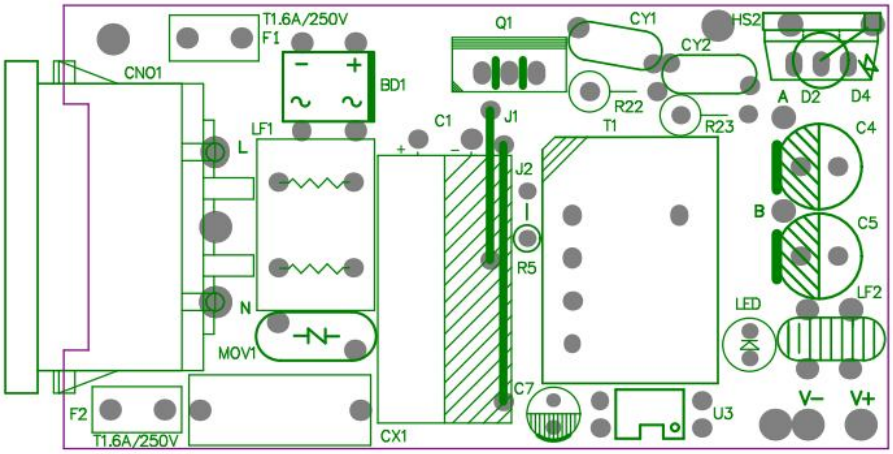
T1.6A/250V
F1
CNO1
BD1
Q1
CY1
CY2
HS2
A
D2
D4
R22
R23
T1
C1
J1
LF1
L
J2
C4
B
C5
R5
N
LED
LF2
MOV1
C7
U3
V−
V+
F2
T1.6A/250V
CX1

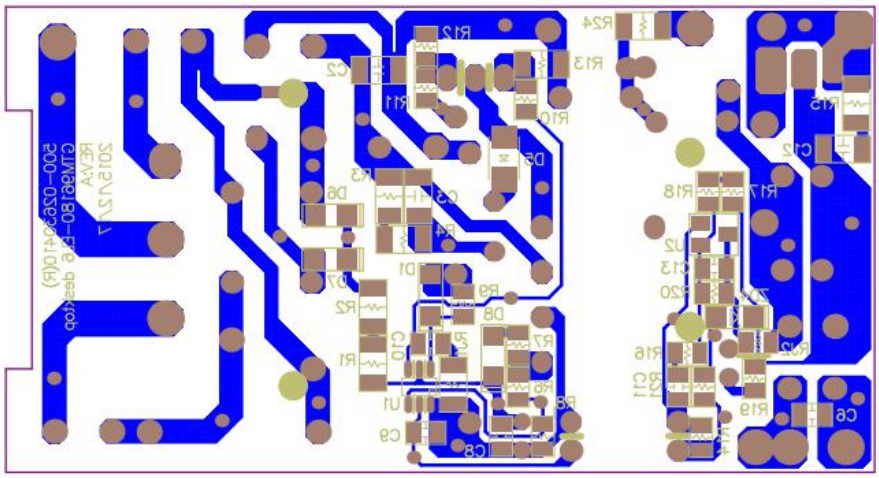

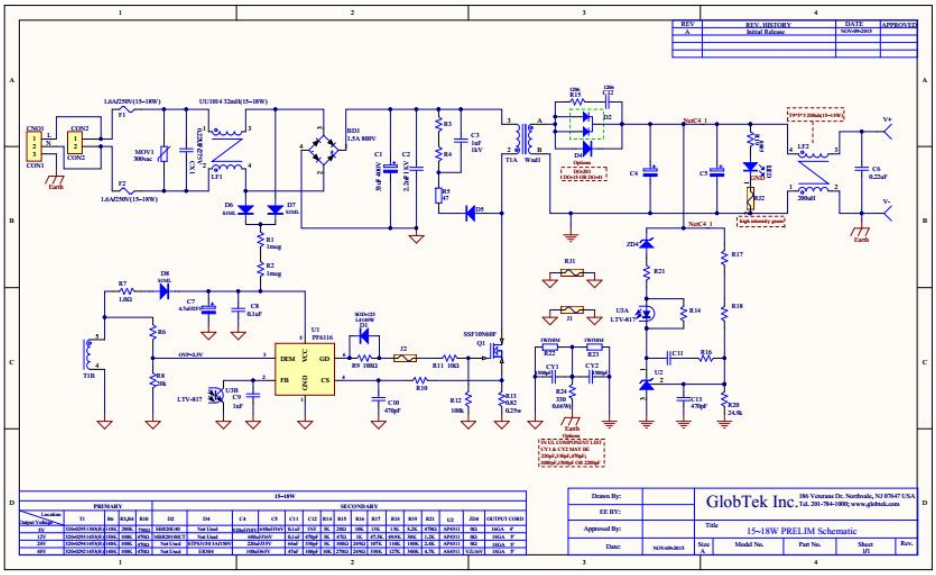
GlobTek Inc.
15-18W PRELIM Schematic

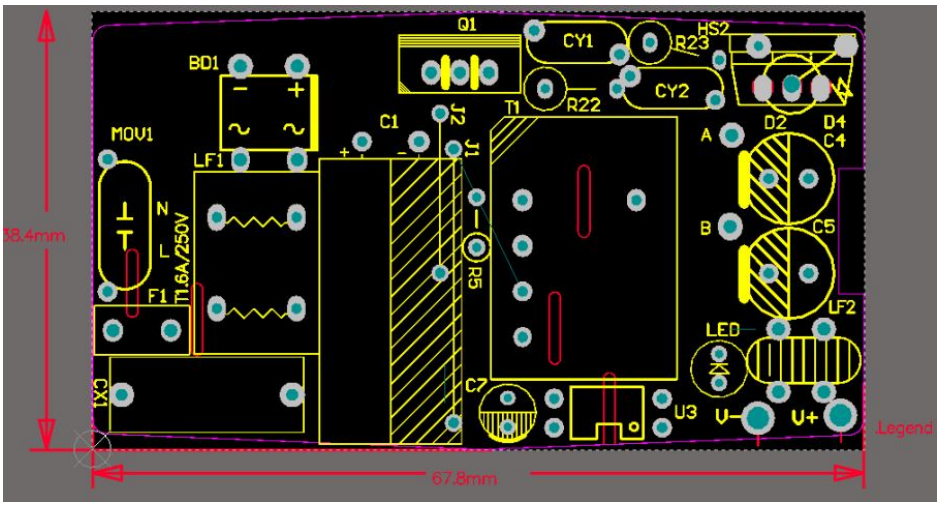
Q1
CY1
R23
HS2
BD1
CY2
R22
T1
C1
J2
J1
MOV1
LF1
D2
D4
C4
A
B
C5
38.4mm
N
L
F1
T1.6A/250V
R5
LF2
LED
CX1
C7
U3
V-
V+
Legend
67.8mm

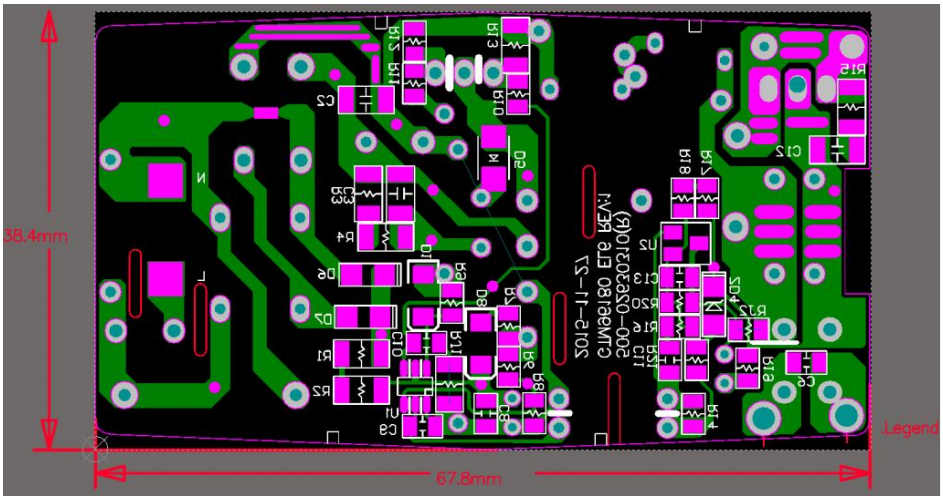
38.4mm
Legend
67.8mm

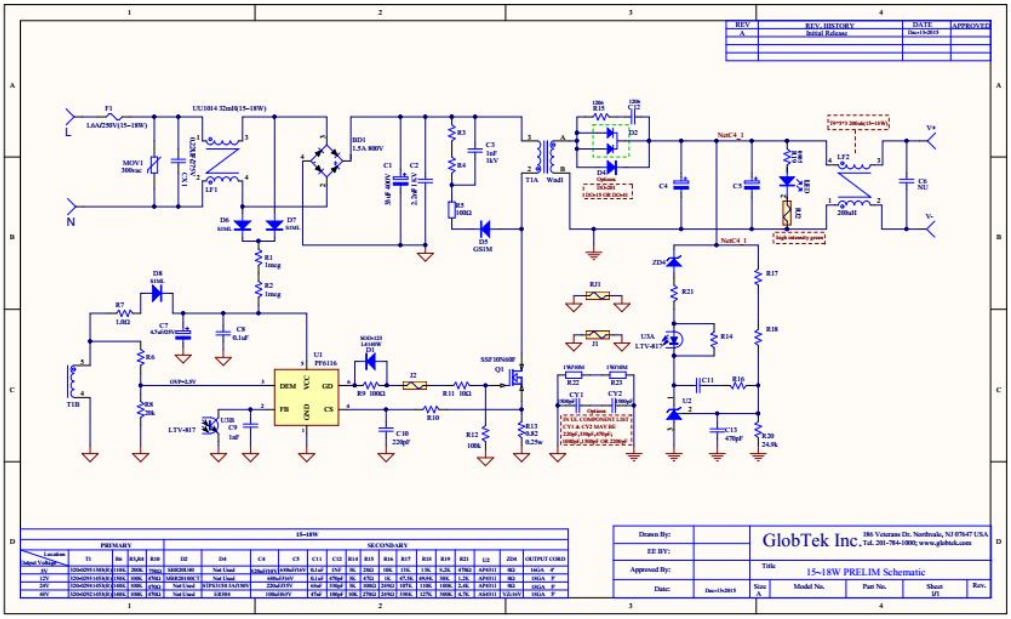
REV. HISTORY
Initial Release
GlobTek Inc.
15~18W PRELIM Schematic

IEC 60601-1 Attachment			
Clause	Requirement + Test	Result - Remark	Verdict

ATTACHMENT TO TEST REPORT IEC 60601-1
US NATIONAL DIFFERENCES
Medical electrical equipment, Part 1: General Requirements

Differences according to..... : US National standard ANSI/AAMI ES60601-1: 2005 / A2:2010

Attachment Form No..... : US_ND_IEC60601_1G
Attachment Originator..... : Underwriters Laboratories Inc.
Master Attachment..... : 2011-04

Copyright © 2011 IEC System for Conformity Testing and Certification of Electrical Equipment (IECEE), Geneva, Switzerland. All rights reserved.

	US NATIONAL DIFFERENCES		
4.8 b	Replacement: where there was no relevant IEC/ISO standard, the relevant US ANSI standard applied		P
	- when no relevant US ANSI standard existed, the requirements of this standard applied		P
4.10.2	Replacement: Rated voltage not exceeding 250V dc or single phase ac. or 600V poly-phase ac for ME EQUIPMENT and ME SYSTEMS up to 4kVA		P
	Rated voltage not exceeding 600 V for all other ME EQUIPMENT and ME SYSTEMS		N/A
6.6	Addition: To comply with NFPA 70, X-Ray systems are classified as long time operation (> 5 min) or momentary operation (< 5 sec)	Not X-ray system	N/A
7.2.11	Addition: To comply with NFPA 70, X-Ray systems are marked as long time operation or momentary operation	Not X-ray system	N/A
7.2.21	New Sub-clause: **Colors of medical gas cylinders**		
	To comply with NFPA 99: Cylinders containing medical gases and their connection points are colored in accordance with the requirements of NFPA 99	No medical gas	N/A
8.2	Addition: All FIXED ME EQUIPMENT & PERMANENTLY INSTALLED ME EQUIPMENT are CLASS I ME EQUIPMENT	Direct plug-in	N/A
8.6.1	Addition: To comply with NFPA 99, the enclosure of X-ray ME EQUIPMENT operating over 600 Vac, 850Vdc MAINS VOLTAGE, or containing voltages up to 50 V peak and enclosed in protectively earthed enclosure as well as connections to X-ray tubes and other high voltage components that include high voltage shielded cables are PROTECTIVELY EARTHED.	Not X-ray system	N/A
	To comply with NFPA 99, non-current carrying conductive parts of X-Ray ME EQUIPMENT likely to become energized are PROTECTIVELY EARTHED	Not X-ray system	N/A
8.7.3 d	EARTH LEAKAGE CURRENT values are not higher than the stated values		P
	5 mA in NORMAL CONDITION	See table 8.7.	P
	10 mA in SINGLE FAULT CONDITION	See table 8.7.	P

IEC 60601-1 Attachment			
Clause	Requirement + Test	Result - Remark	Verdict
8.11	Addition prior to the first paragraph: a) To comply with the NEC, add the following requirements to this clause:		
	Addition: PERMANENTLY CONNECTED ME EQUIPMENT provided with field wiring provision in accordance with NEC	Not permanently connected.	N/A
	Installation of connecting cords between EQUIPMENT parts comply with NEC	No such cord is provided.	N/A
	Cable used as external interconnection between units		
	1) Exposed to abuse: Type SJT, SJTO, SJO, ST, SO, STO, or equivalent, or similar multiple-conductor appliance-wiring material,	No such cable.	N/A
	2) Not exposed to abuse: The cable was as in item 1) above, or	No such cable.	N/A
	i) Type SPT-2, SP-2, or SPE-2, or equivalent	No such cable.	N/A
	ii) Type SVr, SVRO, SVE, or equivalent or similar multiple-conductor appliance wiring material,	No such cable.	N/A
	iii) An assembly of insulated wires each with a nominal insulation thickness of 0.8 mm (1/32 inch) or more,	No such cable.	N/A
	- enclosed in acceptable insulating tubing having a nominal wall thickness of 0.8 mm (1/32 inch) or more	No such cable.	N/A
	Receptacles provided as part of ME EQUIPMENT and ME SYSTEMS for use in the patient care areas of pediatric wards, rooms, or areas are Listed tamper resistant	No such cable.	N/A
	- or employ a Listed tamper resistant cover in accordance with NEC	No such cable.	N/A
	Addition at the end of the clause: b) For ME EQUIPMENT provided with NEMA configuration non-locking plug types 120 V/15 A, 125 V/20 A, 250 V/15 A, 250 V/20 A “Hospital Grade” mains plug is provided and the POWER SUPPLY CORD is marked	No such plug.	N/A
8.11.3.2	Addition: The flexible cord is a type acceptable for the particular application,	No such cord.	N/A
	- and it is acceptable for use at a voltage not less than the rated voltage of the appliance	No such cord.	N/A
	- and has an ampacity as in NEC, not less than the current rating of the appliance	No such cord.	N/A
8.11.3.3	Addition: To comply with NFPA 99, for X-Ray ME EQUIPMENT with an attachment plug, the current rating on a hospital grade plug is 2X the maximum input current of the equipment	Not X-ray equipment.	N/A

IEC 60601-1 Attachment			
Clause	Requirement + Test	Result - Remark	Verdict

ATTACHMENT TO TEST REPORT IEC 60601-1 3rd edition
CA - CANADIAN NATIONAL DIFFERENCES to
CAN/CSA-C22.2 No. 60601-1:08

Differences according to..... :	Canadian National standard: CAN/CSA-C22.2 No. 60601-1:08
Attachment Form No..... :	CA_ND_IEC60601_1G
Attachment Originator..... :	CSA International
Master Attachment..... :	2010-12

Copyright © 2010 IEC System for Conformity Testing and Certification of Electrical Equipment (IECEE), Geneva, Switzerland. All rights reserved.

CA - Canadian National Differences as per CAN/CSA-C22.2 No. 60601-1:08			
1	**Scope, object and related documents**		---
1.1	**Scope**		---
	This standard applies to the BASIC SAFETY and ESSENTIAL PERFORMANCE of MEDICAL ELECTRICAL EQUIPMENT and MEDICAL ELECTRICAL SYSTEMS designed to be installed in accordance with the *Canadian Electrical Code (CEC), Part I,* CSA C22.1; CAN/CSA-C22.2 No. 0; and CAN/CSA-Z32.		P
	NOTE 1A: *In the IEC 60601 standards series adopted for use in Canada, the Canadian-particular standards may modify, replace, or delete requirements contained in this standard as appropriate for the particular ME EQUIPMENT and ME SYSTEMS under consideration, and may add other BASIC SAFETY and ESSENTIAL PERFORMANCE requirements.*		---
1.3	**Collateral standards**		---
	Applicable Canadian collateral standards become normative at the date of their publication and apply together with this standard.		P
	NOTE 1: *When evaluating compliance with CAN/CSA-C22.2 No. 60601-1, it is permissible to assess independently compliance with the adopted Canadian collateral standards.*		---
1.4	**Particular standards**		---
	A requirement of a Canadian-particular safety standard takes precedence over this standard.		P
3	**Terminology and definitions**		---
3.41	**HIGH VOLTAGE**		---
	any voltage above 750 V, 1 050 V peak, as defined in the *Canadian Electrical Code (CEC), Part I*	Noted, but no such HV in EUT	N/A

4	**General requirements**		---
4.8	**Components of ME EQUIPMENT**		---
	a) the applicable safety requirements of a relevant CSA, IEC, or ISO standard; or	UL approved.	P
	NOTE 1: *For the components, it is not necessary to carry out identical or equivalent tests already performed to check compliance with the component standard.*		---

IEC 60601-1 Attachment			
Clause	Requirement + Test	Result - Remark	Verdict
	b) where there is no relevant CSA, IEC, or ISO standard, the requirements of this standard have to be applied		P
	NOTE 2: *If there are neither requirements in this standard nor in a CSA, IEC, or ISO standard, any other applicable source (e.g., standards for other types of devices, national standards) could be used to demonstrate compliance with the RISK MANAGEMENT PROCESS.*		---
4.10.2	**SUPPLY MAINS for ME EQUIPMENT and ME SYSTEMS**		----
	and shall be in accordance with the *Canadian Electrical Code (CEC), Part I,* CSA C22.1:		P
7	**ME EQUIPMENT identification, marking and documents**		---
7.7.1 to 7.7.5	and shall be in accordance with the *Canadian Electrical Code (CEC), Part I,* CSA C22.1		P
	A PROTECTIVE EARTH CONDUCTOR or a PROTECTIVE EARTH CONNECTION or insulation shall be identified by either green or green and yellow colour. Colours of neutral and POWER SUPPLY CORD conductors shall be in accordance with the *Canadian Electrical Code (CEC), Part I*, CSA C22.2 No. 21, and CSA C22.2 No. 49……..:	UL appoved.	P
8	**Protection against electrical HAZARDS from ME EQUIPMENT**		---
8.7.3	**Allowable values**		---
	Allowable values shall be in accordance with the *Canadian Electrical Code (CEC), Part I,* CSA C22.1.		P
8.11.3	**POWER SUPPLY CORDS**		---
8.11.3.2	**Types**		---
	a) The MAINS PLUG of non-PERMANENTLY INSTALLED EQUIPMENT shall be		---
	i) If molded-on type, hospital grade mains plug complying with CSA C22.2 No. 21.....……..…:	No power cord	N/A
	ii) Hospital grade disassembly attachment plug type complying with CSA C22.2 No. 42; or……..:	No power cord	N/A
	iii) Class II equipment having fuses on the line side/sides and neutral and may use a non-polarized attachment plug or a polarized attachment plug — CSA configuration type 1-15P shall be required and shall meet all applicable requirements in CSA C22.2 No. 21 and CSA C22.2 No. 42. Where a polarized attachment plug is used, the POWER SUPPLY CORD shall be connected to the wiring of the EQUIPMENT on the ungrounded side of the line when any of the following devices are used in the primary circuit.....:	No power cord	N/A

IEC 60601-1 Attachment			
Clause	Requirement + Test	Result - Remark	Verdict
	1- the centre contact of an Edison base lampholder;	No power cord	N/A
	2- a single pole switch;	No power cord	N/A
	3- an automatic control with a marked off position;	No power cord	N/A
	4- a solitary fuse/fuse holder; or	No power cord	N/A
	5- any other single pole overcurrent protective device	No power cord	N/A
	b) Detachable POWER SUPPLY CORD for non-PERMANENTLY INSTALLED EQUIPMENT (cord-connected equipment) shall be of a type that		---
	i) can be shown to be unlikely to become detached accidentally, unless it can be shown that detachment will not constitute a safety HAZARD to a PATIENT or OPERATOR;	No power cord	N/A
	ii) can be shown that the impedance of the earth (ground) circuit contacts will not constitute a safety HAZARD to a PATIENT or OPERATOR; and	No power cord	N/A
	iii) has a terminal configuration or other constructional feature that will minimize the possibility of its replacement by a detachable POWER SUPPLY CORD which could create a HAZARDOUS SITUATION	No power cord	N/A
	c) A detachable POWER SUPPLY CORD shall		---
	i) Comply with the applicable requirements of CSA C22.2 No. 21; and…….…….…..:	No power cord	N/A
	ii) Not be smaller than No.18 AWG, and the mechanical serviceability shall be not less than……..:	No power cord	N/A
	1) Type SJ or equivalent for mobile or exposed to abuse ME EQUIPMENT; and…….…….....:	No power cord	N/A
	2) Type SV or equivalent for ME EQUIPMENT not exposed to abuse (or Type HPN if required because of temperature)…….…….:	No power cord	N/A
	NOTE 1A: *See CSA C22.2 No. 49 for requirements on the cord types mentioned in Sub-item 2).*		---
	d) Power supply cords shall meet the requirements of the *Canadian Electrical Code, Part I*, as applicable…….…….…….:	No power cord	N/A
	Connecting cords between equipment parts shall meet the requirements of the *Canadian Electrical Code, Part I*, as applicable…….…….…..:	No power cord	N/A
8.11.5	**Mains fuses and OVER-CURRENT RELEASES**		---
	Mains fuses and OVER-CURRENT RELEASES shall be in accordance with the *Canadian Electrical Code (CEC), Part I,* CSA C22.1…….…….:	See the table 8.10.	P

IEC 60601-1 Attachment			
Clause	Requirement + Test	Result - Remark	Verdict
9	**Protection against MECHANICAL HAZARDS of ME EQUIPMENT and ME SYSTEMS**		---
9.7.5	**Pressure vessels**		---
	Pressure vessels shall comply with the requirements of CSA B51, as applicable……..:	No pressure vessel	N/A
9.7.7	**Pressure-relief device**		---
	A pressure-relief device shall also comply as applicable to the requirements of ASME PTC 25 or equivalent Canadian requirements……:	No pressure relief device	N/A
15	**Construction of ME EQUIPMENT**		---
15.4.1	**Construction of connectors**		---
	A) The point of connection of gas cylinders to EQUIPMENT shall be gas specific and clearly identified so that errors are avoided when a replacement is made. Medical gas inlet connectors on EQUIPMENT shall be		---
	i) gas specific, yoke type, or nut and nipple type valve connections complying with CGA V-1 for pressures over 1 380 kPa (200 psi); or……:	No gas connection	N/A
	ii) DISS type complying with CGA V-5 for pressures 1 380 kPa (200 psi) or less and configured to permit the supply of medical gases from low-pressure connecting assemblies complying with CAN/CSA-Z5359……:	No gas connection	N/A
	NOTE 1A: *Users of this standard should consult the CSA Z305 series of standards, CAN/CSA-Z9170-1, CAN/CSA-Z9170-2, CAN/CSA-Z10524, and CAN/CSA-Z15002 for further information regarding inlet connectors; ISO 407 for requirements addressing yoke-type valve connections; and ISO 32 for colour coding.*		---
15.4.8	**Internal wiring of ME EQUIPMENT**		---
	Internal wiring of ME EQUIPMENT shall be in accordance with the *Canadian Electrical Code (CEC), Part I,* CSA C22.1……:	PE connection wire is approved by UL. See the table 8.10.	P
16	**ME SYSTEMS**		---
16.1	**General requirements for the ME SYSTEMS**		---
	An ME SYSTEM shall provide		---
	- within the PATIENT ENVIRONMENT, the level of safety equivalent to ME EQUIPMENT complying with this standard; and	Not medical system	N/A
	- outside the PATIENT ENVIRONMENT, the level of safety equivalent to equipment complying with their respective CSA, IEC, or ISO safety standards	Not medical system	N/A

IEC 60601-1 Attachment			
Clause	Requirement + Test	Result - Remark	Verdict
	Non-ME EQUIPMENT, when used in an ME SYSTEM, shall comply with CSA, IEC, or ISO safety standards that are relevant to that equipment.	Not medical system	N/A
16.9.2.1	**MULTIPLE SOCKET OUTLET**		---
	c) The MULTIPLE SOCKET-OUTLET shall comply with the requirements of CSA C22.2 No. 42, CSA C22.2 No. 49, and the following requirements……:	No MSO	N/A
	- The separating transformer shall comply with the requirements of CAN/CSA-E61558-2-1 with a rated output not exceeding		---
	- 1 kVA for single-phase transformers; and	No MSO	N/A
	- 5 kVA for polyphase transformers The separating transformer shall also have a degree of protection not exceeding IPX4.	No MSO	N/A

IEC 60601-1 Attachment			
Clause	Requirement + Test	Result - Remark	Verdict
	National standard reference: SN EN 60601-1:2006		
4	Ordinance on environmentally hazardous substances SR 814.081, Annex 1.7, Mercury - Annex 1.7 of SR 814.81 applies for mercury. Switches containing mercury such as thermostats, relays and level controllers are not allowed. Ordinance on chemical hazardous risk reduction SR 814.81, Annex 2.15 Batteries Annex 2.15 of SR 814.81 applies for batteries containing cadmium and mercury. Note: Ordinance relating to environmentally hazardous substances, SR 814.013 of 1986-06-09 is not longer in force and superseded by SR 814.81 of 2009-02-01 (ChemRRV).	No such component.	N/A
4	Supply cords of portable electrical appliances having a rated current not exceeding 10 A shall be provided with a plug complying with IEC 60884-1(3.ed.) + am1, SEV 1011 and one of the following dimension sheets: - SEV 6533-2:2009 Plug type 11, L + N, 250V 10A - SEV 6534-2:2009 Plug type 12, L + N + PE, 250V 10A - SEV 6532-2:2009 Plug type 15, 3L + N + PE, 250/400V 10A Supply cords of portable electrical appliances having a rated current not exceeding 16 A shall be provided with a plug complying with IEC 60884-1(3.ed.) + am1, SEV 1011 and one of the following dimension sheets: - SEV 5933-2:2009 Plug type 21 L + N, 250 V, 16A - SEV 5934-2:2009 Plug type 23 L + N + PE, 250 V, 16A - SEV 5932-2:2009 Plug type 25 3L + N + PE, 250/400V 16A NOTE 16 A plugs are not often used in Swiss domestic installation system. See TRF template regulatory requirements Switzerland on IECEE Website R.R. TRF templates.	No supply cord.	N/A

IEC 60601-1 Attachment			
Clause	Requirement + Test	Result - Remark	Verdict

Appendix: Equipment combined with two-pole plug (Class II)

Supplementary tests on plug portion according to EN 50075:1990

1.	**Dimensions (Clause 7 of EN 50075)**	
	Plugs shall comply with standard size. (Standard sheet 1)	P
2.	**Protection Against Electric Shock (Clause 8 of EN 50075)**	
2.1	Live parts of plugs with the exception of the bare metal parts of the pins, shall not be accessible. (Clause 8.1 of EN 50075)	P
2.2	It shall not be possible to make connection between a pin of a plug and a live socket contact of a socket-outlet while the other pin is an accessible. (Clause 8.2 of EN 50075)	P
2.3	External parts of plugs, with the exception of pins, shall be of insulating material. (Clause 8.3 of EN 50075)	P
3.	**Construction (Clause 9 of EN 50075)**	
3.1	The plug cannot be opened by hand or by using a general purpose tool. (Clause 9.1 of EN 50075)	P
3.2	Pins of plugs shall be solid and shall have adequate mechanical strength. (Clause 9.3 of EN 50075)	P
3.3	Pins of plugs shall be locked against rotation and adequately fixed into the body of the plug. (Clause 9.4 of EN 50075)	P
3.4	Plugs shall be provided with soldered, crimped or equally effective permanent connection. (Clause 9.5 of EN 50075)	P
3.5	Plug shall be shaped in such a way and made of such a material that they can easily be withdrawn by hand from a socket-outlet. (by gripping the medical power supply's enclosure, Clause 9.6 of EN 50075)	P
4.	**Resistance to Humidity (Clause 10 of EN 50075)**	N/A
	The integrated pins were tested together with the medical power supply. (See test report for medical power supply)	
5.	**Insulation Resistance and Electric Strength (Clause 11 of EN 50075)**	N/A
	(See test report for medical power supply)	
6.	**Mechanical Strength (Clause 13 of EN 50075)**	
	Plug shall have adequate mechanical strength to withstand the stresses imposed during use.	P
6.1	The plugs are pressed between two flat surfaces with a force of 150N for 5min. 15min after removal of the force, the plug shall not show such deformation as would result in undue alteration of the dimensions which ensure safety. (Clause 13.1 of EN 50075)	P

IEC 60601-1 Attachment			
Clause	Requirement + Test	Result - Remark	Verdict
6.2	The plug is tested in a tumbling barrel. (Clause 13.2 of EN 50075, fall number is shown in test report for medical power supply) After the test, the plug shall show no damage within the meaning of this standard, in particular: --- No part shall become detached or loosened. --- The pin shall not turn when a torque of 0.4Nm is applied. Note: A section of the pin is square constructed for preventing the rotation.		P
6.3	The pins is held in a suitable clamp in such a position that the straight part of a steel wire (D=1+-0.02mm, U-shaped) rests on the plug pin. The plug is caused to move backwards and forwards, so that the wire rubs along the pin. The number of the movements is 20 000, and the rate of the operation is 25 movements per min. (Clause 13.3 of EN 50075)		P
	After the test, the pin show no damage which may effect safety or impair the further use of the plug, in particular, the insulating sleeve shall not have punctured or rucked up.		P
6.4	A pull force of 40N is applied for 60s on each pin in turn in the direction of the longitudinal axis of the pin. The pull is applied 60min after the plug has been placed in a heating cabinet of 70°C. After the plug cooling down to ambient temperature, any pin shall not have displaced in the body of the plug more than 1mm. (Clause 13.4 of EN 50075)		P
7.	**Resistance to Heat and to Ageing (Clause 14 of EN 50075)**		P
8.	**Current-carrying Parts and Connections (Clause 15 of EN 50075)**		
8.1	Connection, electrical and mechanical, shall withstand the mechanical stresses occurring in normal use, and electrical connections shall be designed that contact pressure is not transmitted through insulating material. (Clause 15.1 & 15.2 of EN 50075)		P
8.2	Current-carrying parts shall be of copper or an alloy containing at least 58% of copper. (Clause 15.3 of EN 50075)		P
9.	**Creepage Distance, Clearances, and Distances Through Insulation (Clause 16 of EN 50075)**		P
10.	**Resistance of Insulating Material to Abnormal Heat and to fire (Clause 17 of EN 50075)**		P

IEC 60601-1 Attachment			
Clause	Requirement + Test	Result - Remark	Verdict

Appendix: Dimensions of integral plug

	DIMENSIONS Checked by means of measurement according to EN50075 Standard sheet 1		P
Position	Requirement (mm)	Measured (mm)	Verdict
1	25,6 – 26,6	25,84	P
2	13 – 14,4	13,98	P
3	45°	45°	P
4	R5 – 6	R5,4	P
5	34,6 – 36	35,09	P
6	18-19,2 in the plane of the engagement face	18,15	P
	17-18 at the ends of the pins	17,55	P
7	4min	-	N/A
8	ϕ3,8max	ϕ3,42	P
9	10-11	10,05	P
10	18,5 – 19,5	19,12	P
11	ϕ3,94 - ϕ4,06	ϕ3,98	P
	Dimensions of position 1, 2 and 3 shall not be exceeded within a distance of 18mm from the engagement face of the plug	19,15	P
	The edges of the metal parts shall be either chamfered or rounded off	Rounded off	P

IEC 60601-1 Attachment			
Clause	Requirement + Test	Result - Remark	Verdict

Appendix: EN50075: 1990 Standard sheet 1

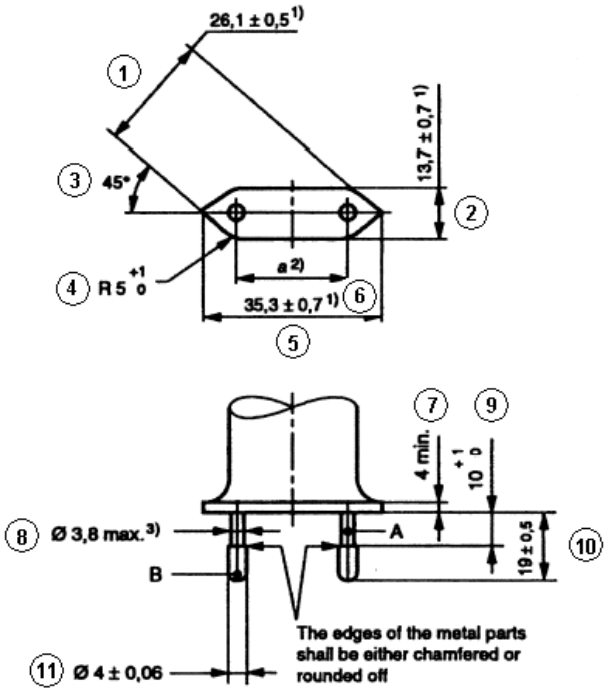

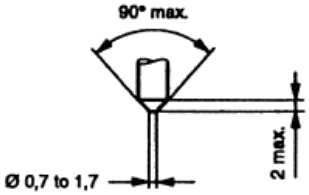

Alternative for end of pins

A. Insulating collar
B. Metal pin

Dimensions in millimetres

1) These dimensions shall not be exceeded within a distance of 18 mm from the engagement face of the plug.

2) Dimension *a* is:

18 mm to 19,2 mm in the plane of the engagement face;

17 mm to 18 mm at the ends of the pins.

3) This dimension may be increased to 4 mm within a distance of 4 mm from the engagement face of the plug.

Pin ends shall be rounded, or conical as shown in detail sketch.

The sketches are not intended to govern design except as regards the dimensions shown.

IEC 60601-1 Attachment			
Clause	Requirement + Test	Result - Remark	Verdict

Appendix: Photo for plug portion according to EN 50075:1990

IEC 60601-1 Attachment			
Clause	Requirement + Test	Result - Remark	Verdict

Appendix: Equipment's combined with Australian plug.

The Australian plug was tested according to Annex J of AS/NZS 3112:2011+A1:2012:

Clause	Requirement – Test	Remark	Verdict
2.2	PLUG PINS		P
2.2.1	MATERIAL FOR PINS: - Copper alloy containing at least 58% copper for parts made from cold rolled sheet		P
2.2.2	ASSEMBLY OF PINS - Assembled in factory and non-rewirable		P
2.2.3	FORM OF PIN		P
2.2.4*	INSULATION OF PLUG PINS - live parts of insulated pins plug are not exposed when plug is partially or fully engaged with the associated socket.		P
2.3	INSULATING MATERIALS		P
2.3.1	GENERAL		P
2.3.2	PLUG BODY - Consisting of PBT which has properties not inferior to those specified in AS 3121 for insulating mouldings having a temperature class of 80°C		P
2.3.3	PLUG COVER - Consisting of PVC which has properties not inferior to those specified in AS 3121 for insulating mouldings having a temperature class of 60°C		P
2.8	RATINGS AND DIMENSIONS OF LOW VOLTAGE PLUGS - Comply with Figure 2.1 (c), rated 10A 250V~. - Distance between live pin and edge of plug moulding more than 9 mm		P
2.9	INTERNAL CONNECTIONS -No earthing connection		N/A
2.10	ARRANGEMENT OF EARTHING CONNECTIONS -No earthing connection		N/A
2.12	MARKING (No marking is applicable for the integral plug portion. See markings for transformer)		N/A
2.12.6	CONFIGURATION OF PLUGS - Figure 2.1 (c), the pin configuration is neutral and active in a clockwise direction		P
2.13	TESTS ON PLUGS		P
2.13.3	HIGH VOLTAGE TEST		P
2.13.7	TUMBLING BARREL TEST		P
2.13.8	TEMPERATURE RISE TEST		P
2.13.9	SECUREMENT OF PLUG		P

IEC 60601-1 Attachment			
Clause	Requirement + Test	Result - Remark	Verdict

Clause	Requirement – Test	Remark	Verdict
2.13.9.1	MOVEMENT OF PINS		P
2.13.9.2	FIXING OF PINS		P
2.13.13	ADDITIONAL TESTS ON THE INSULATION MATERIAL OF INSULATED PIN PLUGS		P

INSULATING MATERIALS TEST IN ACCORDANCE WITH AS/NZS 3121: 2002			
7.1	General		P
7.2	Resistance to heat test The moulding shall be placed in an oven and maintained for 6 h at the temperature appropriate to its class (see Clause 5) plus 10°C. The temperature of the oven during this period shall not vary by more than ± 5°C. The moulding shall show no physical or chemical change likely to impair the safety of the equipment of which it forms a part.		P
7.3	Water absorption test The complete moulding shall be immersed in water at 20 °C ± 5°C for 48 h. The moulding shall not swell, delaminate, warp or show any physical change to a degree that would be liable to impair the safety of the equipment of which it forms a part.		P
7.4	Resistance to white spirit test Sample shall be immersed in white spirit at room temperature for 2 min. The moulding shall not blister, warp or show any physical or chemical change to a degree that would be liable to impair the safety of the equipment of which it forms a part.		P

IEC 60601-1 Attachment			
Clause	Requirement + Test	Result - Remark	Verdict

Appendix: Photos of Australian plug portion

IEC 60601-1 Attachment			
Clause	Requirement + Test	Result - Remark	Verdict

Appendix: Equipment's combined with NEMA 1-15P plug portion.

KEY:

√	= Complies.	G	= General comment
E	= Further evaluation required	N/A	= Not applicable
E√	= Once "E" is found acceptable	T	= Testing required
F	= Non-compliance	TF	= Test failed

Section	Key	Comment
FORWARD		
Introduction		
1		**Scope**
1.1-1.4	G	The device under evaluation is an integral plug for medical power supply GT*41078-*05-USB whose input rated 100-240V~, 50-60Hz, 0.3A. The plug is evaluated according to rated input.
2		**Glossary**
2.1-2.38	G	Noted.
3		**Components**
3.1-3.4	G	Noted
4		**Units of Measurement**
4.1	G	Noted
5		**Reference**
5.1	G	Noted
CONSTRUCTION		
		ALL DEVICES
6		**General**
6.1	√	According to declared reasonable condition, 100-240VAC, 50-60Hz, has been considered in all following test.
6.2	√	Plug for AC use only
7		**Configurations**
7.1	√	1-15P plug applied.
8		**Insulating Materials**
8.1		General
8.1.1	√	All parts that act as the electrical insulation or enclosure are made of plastic material. See 8.2.1
8.1.2	N/A	Vulcanized fiber is not provided
8.2		Flammability
8.2.1	√	The insulating material required HB or more. For detailed parts, see report of end product)
8.3		Electrical properties
8.3.1	√	Exception No. 1: No information according to above table info. The insulating material has a CTI 3 (Required 3), so it need NOT comply with Comparative Tracking Index Test, Section 55.
8.3.2	√	Exception No. 2: The insulating material has a HWI 3, (required HWI value is 4 when material class is V-0). According to 8.1.2 (UL746D) and reasonable usage, reasonable arcing occurs in normal use. We are of the opinion that it need NOT comply with Glow Wire Test, see Section 56.

IEC 60601-1 Attachment			
Clause	Requirement + Test	Result - Remark	Verdict

Section	Key	Comment
		Exception No. 3: The insulating material has a HAI 2. (required HWI value is 4 when material class is V-0. or check if the thickness), since no arcing in normal use, so it need not comply with High-Current Arc Resistance to Ignition Test, Section 57.
8.4		Thermal properties
8.4.1	√	All the RTI rating of the insulating materials are higher than 80 degree (C)
8.5		Vulcanized fiber
8.5.1	N/A	No Vulcanized fiber is provided
8.5.2	N/A	No Vulcanized fiber is provided
8.6		Sealing compounds
8.6.1-8.6.2	N/A	Sealing compound is not provided, no need to comply with relevant requirement involved in ASTM 28.
8.7		Fuse enclosures
8.7.1-8.7.2	N/A	Fuse is not provided
9		**Enclosure**
9.1		General
9.1.1	√	Live parts of plug parts are protected against exposure to contact by persons when fully assembled using all essential parts. Exception no. 2: for fixed wiring.
9.1.2-9.1.3	N/A	No accessible dead-metal parts
9.1.4	√	The probe shown in Figure 9.1 is used to judge the accessibility of a live or dead-metal part. The applied force is not more than 13.3N.
9.1.5-9.1.7	N/A	No such separable part
9.2		Male faces and wire terminations
9.2.1	N/A	Not a 15 or 20A attachment plug or current tap
9.2.2	N/A	There is no exposed live part.
9.2.3	N/A	No such parts
9.2.4-9.2.5	√	Probe not access to live parts. The cover is securely fixed for all acceptable wiring.
9.2.6	√	The face plate is secure with the back part.
10		**Current-carrying Parts**
10.1		General
10.1.1	√	Iron or steel is not used for current-carrying parts.
10.1.2	√	The current-carrying parts are not able to be turned by means of general tools due to the appliance shroud mounted on Evaluated appliance.
10.1.3	N/A	No such uninsulated live parts except for female contact of connector
10.2		Contacts (applying to the connector)
10.2.1	N/A	Female contacts of the connector cannot be touched by the probe. Others parts are covered by exception no. 3
11		**Grounding and Dead Metal Parts**
11.1-11.10	N/A	No grounding parts
12		**Terminals**
12.1-12.4		No terminals for end user
13		**Cord Entry and Strain Relief**
13.1-13.5	N/A	Flexible cord part are considered in the end appliances.
14		**Spacings**

IEC 60601-1 Attachment			
Clause	Requirement + Test	Result - Remark	Verdict

Section	Key	Comment
14.1	√	The spacing through air between uninsulated live parts of opposite polarity and between uninsulated live parts and exposed external surface is measured more than 2mm (required 3/36 inch, 1,2mm) for a device rated 250V or less.
14.2	N/A	No such isolated dead-metal part
15		**Assembly**
15.1		General
15.1.1	√	Pre-wired in factory
15.1.2	√	Electrical contact is reliably maintained at any point
15.1.3	√	Live parts is protected against exposure to persons
15.1.4	N/A	Not multiple outlet device
15.1.5	N/A	Female contacts of the connector can be mated with the inlet in right way without exposure of the blades
15.2		Grounding and polarization
15.2.1-15.2.4	N/A	No grounding
15.3		Mating and interchangeability
15.3.1	√	The electrical continuity is automatically established.
15.3.2-15.3.6	√	1-15P receptacles ensuring.
15.4		Fuseholders
15.4.1-15.4.8	N/A	Fuseholder is not provided
15.5		Switches
15.5.1	N/A	The switch is provided between coupler 1 and coupler 2. but it is a information
ATTACHMENT PLUGS AND INLETS (for plug only)		
16		**Insulating material**
16.1	√	The enclosure is measured min. 2.1 mm.
17		**Enclosure**
17.1		General
17.1.1	N/A	Not a general use plug.
17.1.2	√	Measured 44 mm.
17.1.3	N/A	Not a 50A plug
17.2		Grip
17.2.1	N/A	See section 69
17.3		Face size
17.3.1	√	Larger than figure 17.1
18		**Current carrying parts**
18.1	N/A	Not a folded-over plug.
18.2	√	Dimensional requirements fulfilled.
19		**Grounding and dead metal parts**
19.1-19.4	N/A	No grounding or dead metal parts.
20		**Terminals and leads**
20.1-20.5	N/A	All the assembly are pre-wired in factory
21		**Assembly**
21.1	√	The blades are held securely in place
21.2	N/A	Not a inlet
21.3-21.4	N/A	The device under evaluate is a plug part not inlet or surface mounting.

IEC 60601-1 Attachment			
Clause	Requirement + Test	Result - Remark	Verdict

Section	Key	Comment
21.5	N/A	Not for radio antenna or ground.
22		**Weatherproof type**
22.1-22.2	N/A	Not weatherproof type
23-26	N/A	**CONNECTORS**
27-37	N/A	**RECEPTACLES**
		SELF-CONTAINED RECEPTACLES FOR USE WITHOUT A SEPARATE OUTLET BOX
38-44	N/A	**These sections are applicable for self-contained receptacles.**
		CURRENT TAPS
45	N/A	**The section is applicable for current taps only**
		FLATIRON AND APPLIANCE PLUGS
46-53	N/A	**These sections are applicable for flatiron and appliance plugs.**
PERFORMANCE		
		GENERAL
54		**Representative Devices**
54.1-54.7	G	Noted.
		ALL DEVICES
55		**Comparative Tracking Index Test**
55.1	N/A	Refer to Exception No. 2 of 8.3.2. Not main tests but the test is considered
56		**Glow Wire Test**
56.1-56.2	N/A	Refer to Exception No. 2 of 8.3.2, Not main tests but the test is considered
57		**High-Current Arc Resistance to Ignition Test**
57.1-57.6	G	Refer to Exception No. 3 of 8.3.2
58		**Mold Stress Relief**
58.1-58.2	T	All devices are placed in air oven maintained at a 80oC for 7 hours. After 58.2, there is not any warpage, shrinkage or other distortion.
58.3	T	Refer to data sheet. Repeat dielectric voltage-withstand test as described in section 60. Not required to be subjected to the humidity conditioning described in 60.1.2.
59		**Moisture Absorption Resistance**
59.1-59.2	T	Refer to data sheet
60		**Dielectric Withstand Test**
60.1-60.2	T	Refer to data sheet
61		**Accelerated Aging Tests**
61.1		General
61.1.1	G	Exception to 8.4.1 for other material is not applicable for the devices under evaluation
61.2		Rubber, EPDM, and TEE compounds
61.2.1-61.2.4	N/A	Not a rubber , EPDM, and TEE compounds
61.3		PVC compounds and copolymers
61.3.1-61.3.2	G	See 61.1.1 shown as above
62		**Insulation Resistance Test**
62.1-62.6	T	Refer to data sheet
63		**Conductor Secureness Test**
63.1-63.2	N/A	No wire leads provided.

IEC 60601-1 Attachment			
Clause	Requirement + Test	Result - Remark	Verdict

Section	Key	Comment
64		**Tightening Torque Test**
64.1-64.2	N/A	Not provide any wire-binding screw
	N/A	ATTACHMENT PLUGS
65		**General**
65.1	G	Noted.
66		**Security of blades test**
66.1-66.2	T	Refer to data sheet
67		**Secureness of cover test**
67.1-67.2	T	Refer to data sheet
68		**Crushing test**
68.1-68.2	T	Refer to data sheet
69		**Attachment plug grip test**
69.1-69.9	T	Refer to data sheet
70		**Integrity of assembly test**
70.1-70.2	N/A	Cord part shall be considered in the end appliance.
71		**Self-hinge Flexing test**
71.1-71.3	N/A	Not self-hinge type
72		**Terminal temperature test**
72.1-72.4	N/A	No terminal for end user.
73		**Fuse-holder temperature test**
73.1-73.8	N/A	No fuse-holder applied.
74-79	N/A	**Pin type terminal**
80-85	N/A	**INLET (applying for inlet)**
86-103	N/A	**CONNECTORS**
104-150	N/A	**RECEPTACLES**
		CURRENT-TAPS
		All devices
151-152	N/A	**These sections are for current-taps**
		Flatiron and appliance plugs.
153-161	N/A	**These sections are applicable for flatiron and appliance plugs.**
RATINGS		
162		**Details**
162.1	G	According to exception no. 2, rating is not required. The special-use device is not intended to ship out solely. (Note: plug is mounted in evaluated appliance).
162.2	√	Rating of 1A 120V~ is evaluated
162.3	√	0.5HP rated.
162.4-162.7	N/A	Not have the specified devices
MARKINGS AND INSTRUCTIONS		
163		**General**
163.1-163.2	G	The location of the catalog number is not prohibited from appearing according to exceptions of table 163.1 and 163.2
164		**Identification and marking of terminals**
164	G	No any grounding parts and terminals
SUPPLEMENT		**(reserved for future use)**

IEC 60601-1 Attachment			
Clause	Requirement + Test	Result - Remark	Verdict

Section	Key	Comment
SA		
SUPPLEMENT SB		ENCLOSURE TYPES FOR ENVIRONMENTAL PROTECTION
SB1-SB7	N/A	The requirements of SB don't apply to the device under evaluation for it's intended for indoor use only (refer to SB1.1)
SUPPLEMENT SC		**MARINE SHORE POWER INLETS**
SC1-SC12	N/A	These sections are for marine shore power inlets
SUPPLEMENT SD		**HOSPITAL GRADE DEVICES**
SD1-SD30	N/A	These sections are for hospital grade devices

IEC 60601-1 Attachment			
Clause	Requirement + Test	Result - Remark	Verdict

Appendix: Dimensions of NEMA 1-15P plug portion

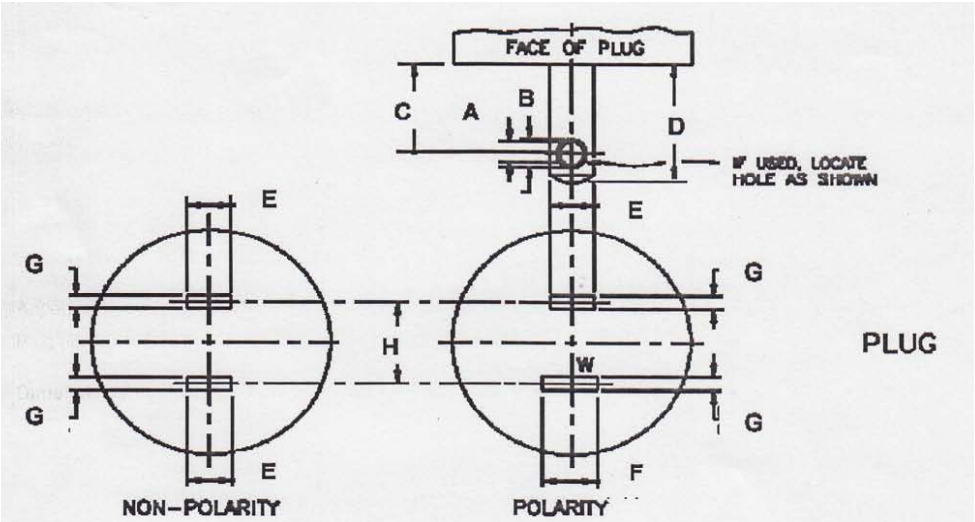

Symbol	Requirement (inch)	Measured (inch)		Symbol	Requirement (inch)	Measured (inch)
A	0.120 – 0.130	0.123		E	0.240 – 0.260	0.248
B	0.151 – 0.161	0.157		F	0.307 – 0.322	--
C	0.449 – 0.479	0.466		G	0.055 – 0.065	0.057
D	0.625 – 0.718	0.656		H	0.495 – 0.505	0.498
Perimeter faces to the plug blades shall not be less than 7.9 mm (intended for use with children's toys) or 5.1 mm from any point of either blade						12.39

IEC 60601-1 Attachment			
Clause	Requirement + Test	Result - Remark	Verdict

Appendix: Photos for NEMA 1-15P plug portion.

IEC 60601-1			
Clause	Requirement + Test	Result - Remark	Verdict

Appendix: Supplementary tests on plug portion according to BS1363: Part 3 + Amd 9543 + Amd 14225 + Amd 14540 + Amd 17437 + Amd A4

Clause	Requirement - Test	Result-Remark	Verdict
12.1	Dimensions (Checked according to figure 4)	See appendix no. 1 & 2	P
12.2	Outline of plug shall not exceed the dimension shown in Figure 4 for a distance of not less than 6.35 mm from the engagement surface	8.90 mm	P
	Pin disposition, length and body outline shall be checked by use of the gauge shown in Figure 5		P
12.3	L/N pin was more than 9.5 mm from the periphery of the plug measured along the engagement surface	9.60 mm	P
12.7	The base and cover of rewirable plugs shall be adaptor plugs having the cover fixed by screws shall be firmly secured to each other. It shall not be possible to remove the cover unless the adaptor is completely withdrawn from the socket-outlet. Fixing screws shall be captive. The test is carried out using apparatus similar to that shown in Figure 6		N/A
12.9	After the temperature rise test (clause 16). Use test probe 11 of BS EN 61032:1998 is applied a force 30 -5/0 N. During and after the test, it was not possible to touch the live parts.		P
12.11	Adaptor plug pins shall be constructed of brass, except for sleeves of pins as specified in 12.18		P
	All exposed surfaces of the adaptor plug pins shall be smooth and free from burrs or sharp edges and other irregularities which could cause damage or excessive wear to corresponding socket contacts or shutters.		P
	Those surfaces of the non-solid adaptor plug pins which are visible when the adaptor is correctly assembled shall be free of apertures.		P
	All seams and joints of non-solid adaptor plug pins shall be closed over their entire length.		P
	For solid pins, conformity shall be checked by 12.11.4.1.		P
	For non-solid pins, compliance shall be checked by 12.11.4.2.		N/A
	Adaptors with non-solid pins shall not cause excessive wear to socket contacts or shutters of socket-outlets in accordance with BS 1363-2:1995.		N/A

IEC 60601-1			
Clause	Requirement + Test	Result - Remark	Verdict

Clause	Requirement - Test	Result-Remark	Verdict
	Adaptor plug pins shall have adequate mechanical strength to ensure that they cannot be distorted by twisting. Apply a torque 1N.m ± 10% for 60 +5/0 S. After each pin has been separately twisted, the plug was fit the gauge in fig. 5. Repeated with opposite direction.		P
12.13	Adaptors shall be so designed that when fully assembled the pins are adequately retained in position such that there is no likelihood of them becoming detached from the adaptor during normal use.		P
	Each pin is subjected for 60 +5/0 S to a pull of 100 - 2/0 N without jerks in the direction of the major axis. The plug is mounted using the steel plate shown in fig.7. The apparatus is placed within an oven and the pull is applied at least 1 h after the plug body has attained the test temperature of 70°C ± 5°C while maintained at this temperature. After the test, the plug pin shall fit into the gauge and comply with 12.2.1.		P
12.14	The degree of flexibility of mounting of the plug pins or the angular movement of the pins in the base shall be not greater than 3° 30'. See fig. 8.		P
	Test procedure refers to standard. During each test, the declination from the horizontal measured on the scale shall not exceed 3° 30' and comply with 12.2.1.		P
12.18	Live and neutral adaptor plug pins shall be fitted with insulating sleeves. See fig.4. Sleeves shall not be fitted to any earthing adaptor plug pin.		P
12.19.3	Abrasion test – 10 000 times in each direction (20 000 movements) at a rate of 25 movements to 30 movements per min. (fig. 9). After the test, the sleeve shall show no damage and also shall not have been penetrated or creased, satisfy the tests in 12.19.2.		P
13.10	The total mass of the equipment with all specified connectors shall not exceed 800 g. The torque exerted on a socket shall not exceed 0.7 N·m. The test apparatus as Figure 37	Compliance with the main standard	N/A

IEC 60601-1			
Clause	Requirement + Test	Result - Remark	Verdict

Clause	Requirement - Test	Result-Remark	Verdict
	Additional: Products with torque exceeding 0.25Nm do not comply with the main standard hence full compliance with the main standard cannot be claimed		N/A
Additional test for ISODs according to BS1363: Part 1 + Amd 9541 + Amd 14539 + Amd 17435 + Amd A4			
12.9.1	All exposed surfaces of plug pins shall be smooth and free from burrs or sharp edges and other irregularities which could cause damage or excessive wear to corresponding socket contacts or shutters.		P
12.9.4	Apply a force of 1100 -10/0N at a rate not exceeding 10 mm/min. After this test the plug should fit the gauge to fig. 5.		P
	Apply a force of 400 +10/0N at a rate 10 ± 2 mm/min. Deflection shall not exceed 1.5 mm. After this test the plug should fit the gauge to fig. 5.		P
12.9.6	ISODs shall have adequate mechanical strength to ensure that they cannot be distorted by twisting. Apply a torque 1N.m ± 10% for 60 +5/0 S. After each pin has been separately twisted, the plug shall fit the gauge in fig. 5. Repeated with opposite direction.		P

IEC 60601-1			
Clause	Requirement + Test	Result - Remark	Verdict

Appendix:

	Dimensions Checked by means of measurement according to BS1363-3 Fig. 4 (see appendix no. 2)		
Position	Requirement (mm)	Measured (mm)	Verdict
1.	25,37max	24.02	P
2.	25,37max	24.02	P
3.	R15min	Measured by guage	P
4.	R9,5min	9.60	P
5.	R9,5min	9.60	P
6.	11,05-11,18	11.12	P
7.	11,05-11,18	11.12	P
8.	34,6max	30.50	P
9.	22,23-23,23	22.60	P
10.	1,35-1,85	1.55	P
11.	7,80-8,05	8.03	P
12.	58º-62º inclusive	60º	P
13.	3,90-4,05	3.99	P
14.	9,2max	8.88	P
15.	17,2-18,2	18.05	P
16.	9,5max	9.17	P
17.	22,10-22,36	22.21	P
18.	6,22-6,48	6.26	P
19.	3,90-4,05	4.03	P
20.	6,22-6,48	6.26	P
21.	1,35-1,85	1.81	P
22.	3,90-4,05	3.98	P
23.	1,2-2,0	1.24	P
24.	R0,1-R1,0	R0.55	P
25.	60 º-80 º inclusive	68 º	P
Outline of the plug not exceed the dimension shown in figure 4 at least 6,35mm from the engagement surface		8.90	P

IEC 60601-1			
Clause	Requirement + Test	Result - Remark	Verdict

Appendix: BS1363-3 Fig 4

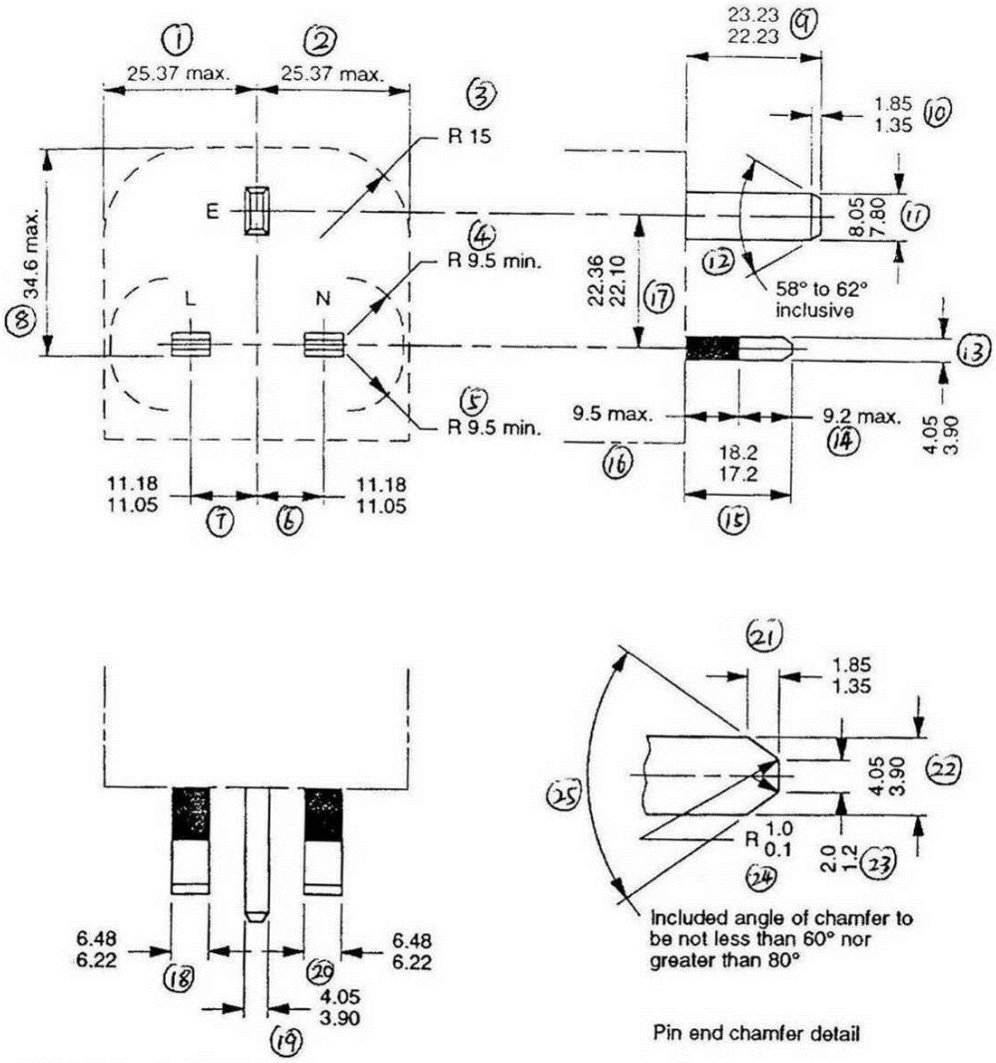

All dimensions are in millimetres.

Figure 4. Dimensions and disposition of pins (see clause 12)

IEC 60601-1			
Clause	Requirement + Test	Result - Remark	Verdict

Appendix: Concave shrinkable allowance for ISODs

	Dimensions Checked by means of measurement according to BS1363-1 Fig. 4b		
Position	Requirement (mm)	Measured (mm)	Verdict
1.	7,75-8,05	8.03	P
2.	3,90-4,05	3.99	P
3.	≤ 0,15	0.01	P
4.	≤ 0,15	0.01	P
5.	≤ 0,15	0.01	P
6.	≤ 0,15	0.01	P

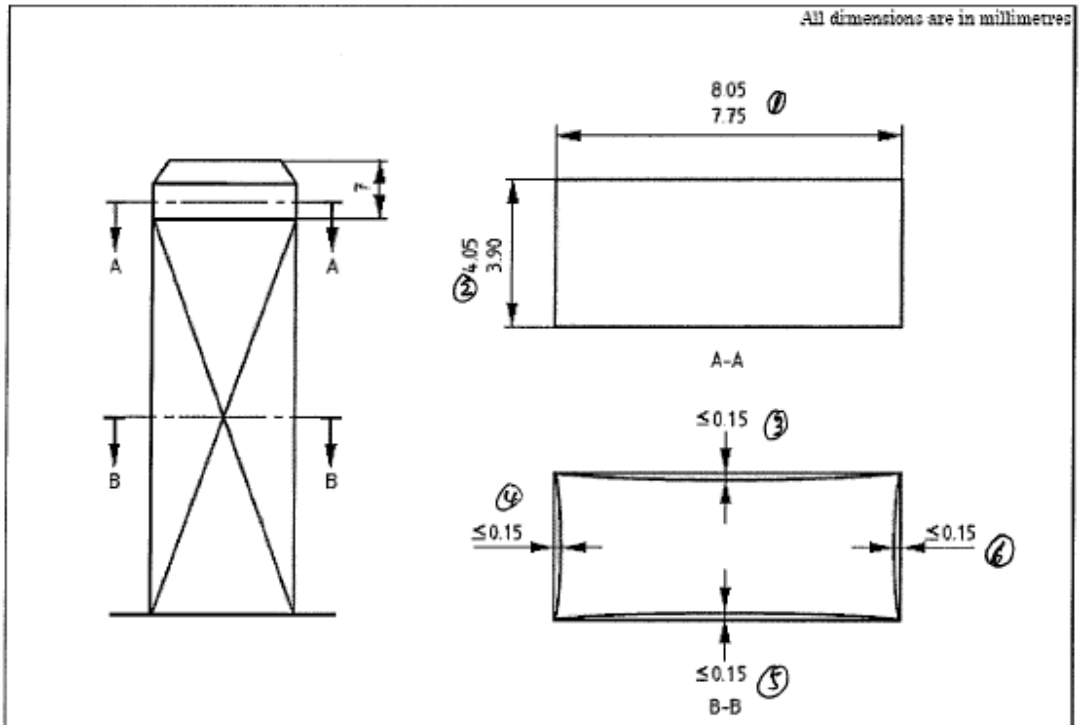

Solid insulated shutter opening device (ISOD)

NOTE Section A-A to be measured away from chamfer as shown.

Figure 4b) — Concave shrinkage allowance for ISODs

IEC 60601-1			
Clause	Requirement + Test	Result - Remark	Verdict

Appendix: Photo for BS1363 plug portion

IEC 60601-1			
Clause	Requirement + Test	Result - Remark	Verdict

Appendix: Equipment's combined with Brazilian plug.

The Brazil plug was tested according to IEC 60884-1:2002 (Third edition) +A1:2006:

Clause	Requirement - Test	Result-Remark	Verdict
8	MARKING		P
8.1	Accessories marked as follows:		P
	- rated current (A) .....:	2.5A	P
	- rated voltage (V) .....:	250V	P
	- symbol for nature of supply .....:	~	P
	- manufacturer's or responsible vendor's name ....:	GlobTek, Inc.	P
	- type reference .....:	GT-41052	P
	- symbol for degree of protection (first digit) .....:		N/A
	- symbol for degree of protection (second digit) ....:		N/A
	Socket-outlets with screwless terminals marked with the following:		N/A
	- the length of insulation to be removed .....:		N/A
	- an indication of the suitability to accept rigid conductors only (if any) .....:		N/A
8.2	Symbols used: as required in the standard		P
	Marking for the nature of supply placed next to the marking for rated current and rated voltage	2.5A, 250V a.c.	P
8.3	Marking of fixed socket-outlets placed on the main part:		N/A
	- rated current, rated voltage and nature of supply		N/A
	- identification mark of the manufacturer or of the responsible vendor		N/A
	- length of insulation to be removed, if any		N/A
	- type reference		N/A
	Cover plates necessary for safety purposes and ntended to be sold separately: marked with the manufacturer's or responsible vendor's name and type reference		N/A
	IP code, if applicable: marked so as to be easily discernible		N/A
	Fixed socket-outlets classified according to item b) of 7.2.5: identified by a triangle visible after installation unless they have an interface configuration different from that used in normal circuits .....:		N/A
8.4	Plugs and portable socket-outlets: marking specified in 8.1, other than the type reference, easily discernible		P

IEC 60601-1			
Clause	Requirement + Test	Result - Remark	Verdict

Clause	Requirement - Test	Result-Remark	Verdict
	Plugs and portable socket-outlets for equipment of class II not marked with the symbol for class II construction		P
8.5	Neutral terminals: N .....:		N/A
	Earthing terminals: [earth symbol] .....:		N/A
	Markings not placed on screws or other easily removable parts		N/A
	Terminals for conductors not forming part of the main function of the socket-outlet:		N/A
	- clearly identified unless their purpose is self evident, or		N/A
	- indicated in a wiring diagram fixed to the accessory		N/A
	Identification of such terminals may be achieved by:		N/A
	- their being marked with graphical symbols according to IEC 60417-2 or colours and/or alphanumeric system, or		N/A
8.6	Surface-type mounting boxes forming an integral part of socket-outlets having IP>20: IP code marked on the outside of its associated enclosure so as to be easily discernible		N/A
8.7	Indication of which position or with which special provision the declared IP of flush-type and semiflush-type fixed socket-outlets having IP>X0 is ensured		N/A
8.8	Marking durable and easily legible. Test: 15 s with water and 15 s with petroleum spirit		N/A
9	CHECKING OF DIMENSIONS		P
9.1	Accessories and surface-type mounting boxes comply with the appropriate standard sheets	NBR 14136/02 figure 13. See page 15	P
	Insertion of plugs into fixed or portable socketoutlets ensured by their compliance with the relevant standard sheets		P
	Compliance checked by measurement and by means of gauges with manufacturing tolerances as shown in table 2		P
9.2	It is not possible to engage a plug with:		P
	- a socket-outlet having a higher voltage rating or a lower current rating;		P
	- a socket-outlet with a different number of live poles (exception admitted provided that no dangerous situation can arise);		P

IEC 60601-1			
Clause	Requirement + Test	Result - Remark	Verdict

Clause	Requirement - Test	Result-Remark	Verdict
	- a socket-outlet with earthing contact (plug for class 0 equipment).		N/A
	Engagement of a plug for class 0 or class I equipment with a socket-outlet designed to accept plugs for class II equipment, not possible		N/A
	Impossibility of insertion checked by applying a gauge, for 1 min, with a force of:		N/A
	- 150 N (rated current ≤ 16A);		N/A
	- 250 N (rated current > 16A) ;		N/A
	Accessories with elastomeric or thermoplastic material: test carried out at (35 ± 2) °X		N/A
9.3	Deviations from standard sheets made only if they provide technical advantage and do not affect the purpose and safety of accessories complying with standard sheet		N/A
18	OPERATION OF EARTHING CONTACTS		N/A
	Earthing contacts provide adequate contact pressure and not deteriorate in normal use		N/A
	Compliance checked by the tests of clauses 19 and 21		N/A
19	TEMPERATURE RISE		P
	Temperature rise test		P
	Socket-outlets tested using a test plug with brass pins having the minimum specified dimensions		N/A
	Plugs tested with clamping units having dimensions specified in Figure 44 fitted on each live pin and earthing pin, if any		P
20	BREAKING CAPACITY		N/A
	Accessories have adequate breaking capacity		N/A
	Compliance checked by testing:		N/A
	- socket-outlets;		N/A
	- plugs with pins which are not solid		N/A
	Test conditions:		N/A
	- 100 strokes; rate of operation .....:		----
	- test voltage (1,1 Vn) .....:		----
	- test current (1,25 In) (power factor 0,6) .....:		----
	Multiple socket-outlets: test carried out on one socket-outlet of each type and current rating		N/A
	During the test: no sustained arcing occur		N/A
	After the test:		N/A

IEC 60601-1			
Clause	Requirement + Test	Result - Remark	Verdict

Clause	Requirement - Test	Result-Remark	Verdict
	- specimens show no damage impairing their further use;		N/A
	- entry holes for the pins not show any damage which may impair the safety		N/A
21	NORMAL OPERATION		N/A
	Accessories withstand without excessive wear or other harmful effect, the mechanical, electrical and thermal stresses occurring in normal use		N/A
	Compliance checked by testing:		N/A
	- socket-outlets;		N/A
	- plugs with resilient earthing socket-contacts;		N/A
	- plugs with pins which are not solid		N/A
	Test performed on:		N/A
	- complete shuttered socket-outlets		N/A
	- specimens prepared by the manufacturer without shutters (with current flowing). Number of strokes:		N/A
	- specimens with shutters (without current flowing)		N/A
	- complete shuttered socket-outlets with operations made by hand as in normal use		N/A
	Test conditions:		N/A
	- 10000 strokes; rate of operation .....:		----
	- test voltage Vn (V) .....:		----
	- test current (as specified in table 20) (A) (power factor 0,8) .....:		----
	Test current passed:		N/A
	- during each insertion and withdrawal of the plug (In ≤ 16A)		N/A
	- during alternate insertion and withdrawal, the other insertion and withdrawal being made without current flowing (In > 16A)		N/A
	Multiple socket-outlets: test carried out on one socket-outlet of each type and current rating		N/A
	During the test: no sustained arcing occur		N/A
	After the test the specimens do not show:		N/A
	- wear impairing their further use;		N/A
	- deterioration of enclosures, insulating lining or barriers;		N/A

IEC 60601-1			
Clause	Requirement + Test	Result - Remark	Verdict

Clause	Requirement - Test	Result-Remark	Verdict
	- damage to the entry holes for the pins, that might impair proper working;		N/A
	- loosening of electrical or mechanical connections;		N/A
	- seepage of sealing compound		N/A
	Shuttered socket-outlets: the following gauges applied to the entry holes corresponding to live contacts do not touch live parts when they remain under the relevant forces:		N/A
	Gauge of figure 9, applied with a force of 20 N, for approximately 5 s, successively in three directions		N/A
	Steel gauge of figure 10, applied with a force of 1 N for approximately 5 s, in three directions		N/A
	Temperature-rise test (requirements of clause 19):		N/A
	Test current as required for the normal operation test, given in table 20, passed for 1 h (A) .....:		----
	Temperature rise of terminals not exceed 45 K (K) .....:		N/A
	Separate tests made passing the current through:		N/A
	- the neutral contact, if any, and the adjacent phase contact (K) .....:		N/A
	- the earthing contact, if any, and the nearest phase contact (K) .....:		N/A
	Socket-outlets: electric strength (sub-clause 17.2), test voltage (a.c., for 1 min):		N/A
	a) test voltage (V).....:		N/A
	b) test voltage (V).....:		N/A
	c) test voltage (V).....:		N/A
	d) test voltage (V).....:		N/A
	e) test voltage (V).....:		N/A
	Plugs: electric strength (sub-clause 17.2), test voltage (a.c., for 1 min):		N/A
	a) test voltage (V).....:		N/A
	b) test voltage (V).....:		N/A
	c) test voltage (V).....:		N/A
	d) test voltage (V).....:		N/A
	During the test: no flashover or breakdown		N/A
	Fixed socket-outlets: test according to 13.1		N/A
	Pins of plugs and portable socket-outlets: test according to 14.2		N/A

IEC 60601-1			
Clause	Requirement + Test	Result - Remark	Verdict

Clause	Requirement - Test	Result-Remark	Verdict
	Force exerted measured in side earthing contacts not less than 60 % or 5 N (CEE 7 clause 18) .....:		N/A
22	FORCE NECESSARY TO WITHDRAW THE PLUG		N/A
	Construction of accessory does allow the easy insertion and withdrawal of the plug, and prevent the plug from working out of the socket-outlet in normal use		N/A
	Rated current (A) .....:		N/A
	Number of poles .....:		N/A
	Verification of the maximum withdrawal force (multi-pin gauge)		N/A
	- Maximum withdrawal force (N) .....:		----
	The plug not remain in the socket-outlet		N/A
	Verification of the minimum withdrawal force (single-pin gauge)		N/A
	- Minimum withdrawal force (N) .....:		----
	The plug not fall from each individual contactassembly within 30 s		N/A
23	FLEXIBLE CABLES AND THEIR CONNECTION		P
23.1	Plugs and portable socket-outlets provided with a cord anchorage such that the conductors are relieved from strain and that their covering is protected from abrasion		P
	Sheath of flexible cable clamped within the cord anchorage		P
23.2	Pull and torque test		P
	Non-rewirable accessories:		P
	After the test:		P
	Displacement ≤ 2 mm .....:		P
	No break in the electrical connections		P
	Rewirable accessories:		N/A
	After the test:		P
	Displacement ≤ 2 mm .....:		P
	End of conductors not have moved noticeably in the terminals		P
	Rewirable accessories having rated current up to and including 16 A:		N/A
	Suitable for fitting with the appropriate cable as shown in table 19		N/A
	Type of flexible cable; number of conductors and nominal cross-sectional area (mm^2).....:		----

IEC 60601-1			
Clause	Requirement + Test	Result - Remark	Verdict

Clause	Requirement - Test	Result-Remark	Verdict
23.3	Non-rewirable plugs and non-rewirable portable socket-outlets: provided with a flexible cable complying with IEC 60227 or IEC 60245		N/A
	Flexible cables have the same number of conductors as there are poles in the plug or socket-outlet		N/A
	Conductor connected to the earthing contact: identified by the colour combination green/yellow		N/A
23.4	Non-rewirable plugs and non-rewirable portable socket-outlets: designed that the flexible cable is protected against excessive bending		P
	Guards of insulating material and fixed in reliable manner		P
	Flexing test (10.000 flexings):		P
	During the test: no interruption of the test current and no short-circuit between conductors		P
	After the test: guard no separated from the body, insulation shows no sign of abrasion or wear, broken strands become no accessible		P
24	MECHANICAL STRENGTH		P
	Accessories, surface mounting boxes and screwed glands have adequate mechanical strength		P
24.1	Fixed socket-outlets, portable multiple socketoutlets and surface-type mounting boxes: impact test (apparatus shown in fig. 22, 23, 24 and 25)		N/A
	After the test: no damage, live parts no become accessible		N/A
24.2	Portable single socket-outlets and plugs: subjected to test Ed: Free fall, procedure 2 of IEC 60068-2-32 (tumbling barrel); number of falls .....:	1000 falls	P
	After the test:		P
	- no part become detached or loosened;		P
	- pins no become so deformed that the plug cannot be introduced into a socket-outlet and also fails to comply with the requirements of 9.1 and 10.3;		P
	- pins no turn when a torque of 0,4 Nm is applied for 1 min in each direction		P
24.3	Bases of surface-type socket-outlets: first fixed to a cylinder of rigid steel sheet and then fixed to a flat steel sheet		N/A

IEC 60601-1			
Clause	Requirement + Test	Result - Remark	Verdict

Clause	Requirement - Test	Result-Remark	Verdict
	During and after the tests: no damage		N/A
24.4	Portable single socket-outlets, multiple socketoutlets and plugs (elastomeric or thermoplastic material): impact test, weight (1000 ± 2) g, height 100 mm (apparatus shown in fig. 27)		P
	Specimens placed in a freezer at (-15 °C ± 2) °C for at least 16 h. After the test: no damage		P
24.5	Portable single socket-outlets and plugs (elastomeric or thermoplastic material): compression test, 300 N for 1 min, position a) and b) (apparatus shown in fig. 8)		P
	After the test: no damage		P
24.6	Screwed glands of accessories having IP>20: torque test (1 min)		N/A
	- diameter of test rod (mm) .....:		----
	- type of material .....:		----
	- torque (Nm) .....:		----
	- type of material .....:		----
	After the test: no damage of glands and enclosures of the specimens		N/A
24.7	Plug pins provided with insulating sleeves: 20000 movements, 4 N (apparatus shown in fig. 28)		N/A
	After the test: no damage of pins, insulating sleeve not have punctured or rucked up		N/A
24.8	Shuttered socket-outlets: mechanical test carried out on specimens submitted to the normal operation test according to clause 21		N/A
	Force applied for 1 min against the shutter of an entry hole by means of one pin .....:		----
	Pin not come in contact with live parts		N/A
	After the test: no damage		N/A
24.9	Multiple portable socket-outlet: mechanical test		N/A
	Rewirable multiple socket-outlets: flexible cable of the smallest cross-sectional area specified in table 3 .....:		----
	8 falls on concrete floor with the specimens arranged as shown in figure 29		N/A
	After the test: no damage, no part have become detached or loosened		N/A
	Accessories having IP>X0 submitted again to the tests as specified in 16.2		N/A

IEC 60601-1			
Clause	Requirement + Test	Result - Remark	Verdict

Clause	Requirement - Test	Result-Remark	Verdict
24.10	Plugs: pull test to verify the fixation of pins in the body of the plug (new specimens)		P
	Maximum withdrawal force (table 16) applied for 1 min on each pin in turn, after the specimen has been placed at (70 ± 2) °C for 1 h .....:		----
	After the test: displacement of pins in the body of the plug ≤ 1 mm .....:		P
24.11	Barriers of portable socket-outlets having means for suspension on a mounting surface:		N/A
	Force applied for 10 s against the barrier by means of a cylindrical steel rod (1,5 times the maximum plug withdrawal force specified in 22.1, table 16) (N) .....:		----
	Rod not pierce the barrier		N/A
24.12	Portable socket-outlets having means for suspension on a mounting surface (pull test):		N/A
	Pull applied to the supply flexible cable for 10 s (force prescribed in 23.2 for checking the flexible cable anchorage) (N) .....:		----
	During the test: no break of the means for suspension on a mounting surface		N/A
24.13	Portable socket-outlets having means for suspension on a mounting surface (pull test):		N/A
	Pull applied to the engagement face of the socket-outlet for 10 s (maximum withdrawal force specified, for the corresponding plug, in table 16) (N) .....:		----
	During the test: no break of the means for suspension on a mounting surface		N/A
24.14	Forces necessary to retain or remove covers, cover-plates or parts of them (accessibility with the test finger to live parts)		N/A
24.14.1	Verification of the retention of covers or cover-plates (fixed socket-outlets)		N/A
	Force applied for 1 min perpendicular to the mounting surface .....:		----
	Covers or cover-plates not come off		N/A
	Test repeated on new specimens with a sheet of hard material, (1 ± 0,1) mm thick, fitted around the supporting frame (fig. 31). Covers or coverplates not come off		N/A
	After the test: no damage		N/A
24.14.2	Verification of the removal of covers or cover-plates (fixed socket-outlets)		N/A

IEC 60601-1			
Clause	Requirement + Test	Result - Remark	Verdict

Clause	Requirement - Test	Result-Remark	Verdict
	Force not exceeding 120 N applied 10 times perpendicular to the mounting / supporting surface: covers or cover-plates come off		N/A
	Test repeated on new specimens with a sheet of hard material, (1 ± 0,1) mm thick, fitted around the supporting frame (fig. 31). Covers or coverplates come off		N/A
	After the test: no damage		N/A
24.14.3	Verification of the retention of covers or cover-plates (plugs and portable socketoutlets)		N/A
	Force 80 N applied for 1 min perpendicular to the mounting surface. Covers, cover-plates or parts of them not come off		N/A
	Test repeated with a force of 120 N:		N/A
	Rewirable plugs and rewirable portable socketoutlets: covers, cover-plates or parts of them may come off but the specimen shows no damage		N/A
	Non-rewirable, non moulded-on accessories: covers, cover-plates or parts of them may come off but the accessories is permanently useless according to 14.1		N/A
24.15	Force necessary for covers or cover-plates to come off or not to come off (accessibility with the test finger to non-earthed metal parts separated from live parts by creepage distances and clearances according to table 23)		N/A
24.14.1	Verification of the non-removal of covers or cover-plates		N/A
	Force applied for 1 min in direction perpendicular to the mounting surface .....:		----
	Covers or cover-plates not come off		N/A
	Test repeated on new specimens with a sheet of hard material, 1 mm ± 0,1 mm thick, fitted around the supporting frame (fig. 8)		N/A
	Covers or cover-plates not come off		N/A
	After the test: no damage		N/A
24.14.2	Verification of the removal of covers or cover-plates		N/A
	Force not exceeding 120 N applied 10 times in direction perpendicular to the mounting / supporting surface: covers or cover-plates come off		N/A
	Test repeated on new specimens with a sheet of hard material, 1 mm ± 0,1 mm thick, fitted around the supporting frame (fig. 8)		N/A

IEC 60601-1			
Clause	Requirement + Test	Result - Remark	Verdict

Clause	Requirement - Test	Result-Remark	Verdict
	Covers or cover-plates come off		N/A
	After the test: no damage		N/A
24.16	Force necessary for covers or cover-plates to come off or not to come off (accessibility to insulating parts, earthed metal parts, live parts of SELV ≤ 25 V a.c. or metal parts separated from live parts by creepage distances twice those according to table 23		N/A
24.14.1	Verification of the non-removal of covers or cover-plates		N/A
	Force 10 N applied for 1 min in direction perpendicular to the mounting surface: covers or cover-plates not come off		N/A
	Test repeated on new specimens with a sheet of hard material, 1 mm ± 0,1 mm thick, fitted around the supporting frame (fig. 8)		N/A
	Covers or cover-plates not come off		N/A
	After the test: no damage		N/A
24.14.2	Verification of the removal of covers or cover-plates		
	Force not exceeding 120 N applied 10 times in direction perpendicular to the mounting / supporting surface: covers or cover-plates come off		N/A
	Test repeated on new specimens with a sheet of hard material, 1 mm ± 0,1 mm thick, fitted around the supporting frame (fig. 8)		N/A
	Covers or cover-plates come off		N/A
	After the test: no damage		N/A
24.17	Test with gauge of figure 7 applied according to figure 9 for verification of the outline of covers or cover-plates: distances between face C of gauge and outline of side under test, not decrease .....:		----
24.18	Test with gauge according to figure 5 applied as shown in figure 11 (1 N): gauge not enter more than 1mm .....:		----

IEC 60601-1			
Clause	Requirement + Test	Result - Remark	Verdict

Appendix: NBR14136/02 - Fig 13

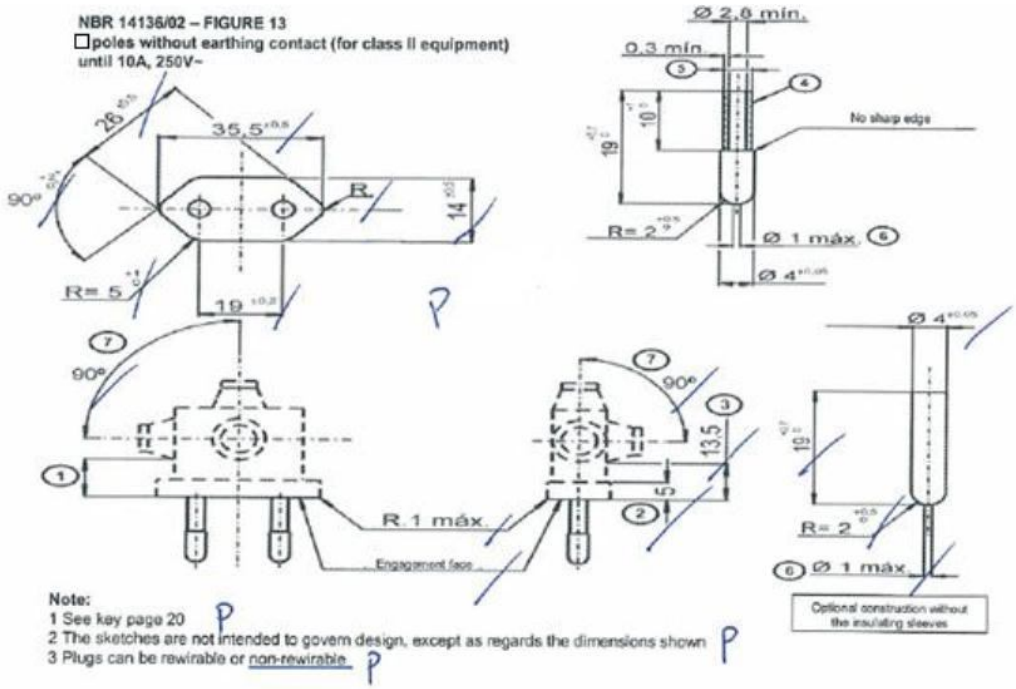

Note:
1 See key page 20 P
2 The sketches are not intended to govern design, except as regards the dimensions shown P
3 Plugs can be rewirable or non-rewirable P

Key of page 20:
1– The distance between the engagement face and the cord or cord guard, if any, shall be at least 14 mm P
2– Within this distance, the outline shall be not smaller than the engagement face. P
3– Within this distance, the outline shall be not larger than the engagement face. P
4– Insulating sleeves on the current-carrying pins are optional N/A
If the insulating sleeves are separate parts, they shall enter the plug by at least 3mm measured from the engagement face. N/A
5– The external diameter of the insulating sleeves shall not be larger than the diameter of the uninsulated part of the pins. N/A
6– To avoid damage to shutters, the ends of the pins shall show neither sharp edges nor burrs. They shall be of rounded shape as shown. P
7– The angle of 90° represents the maximum permissible area for the orientation of the entry of the flexible cable or cord. P

Plug Marking for the 10A 250V~ Plug:

Cable section of 0.5mm² - 2.5A 250V~ P
Cable section of 0.75mm² - 10A 250V~
Cable section of 1mm² - 10A 250V~
Cable section of 1.5mm² - 10A 250V~
Cable section of 2.5mm² - 10A 250V~

IEC 60601-1			
Clause	Requirement + Test	Result - Remark	Verdict
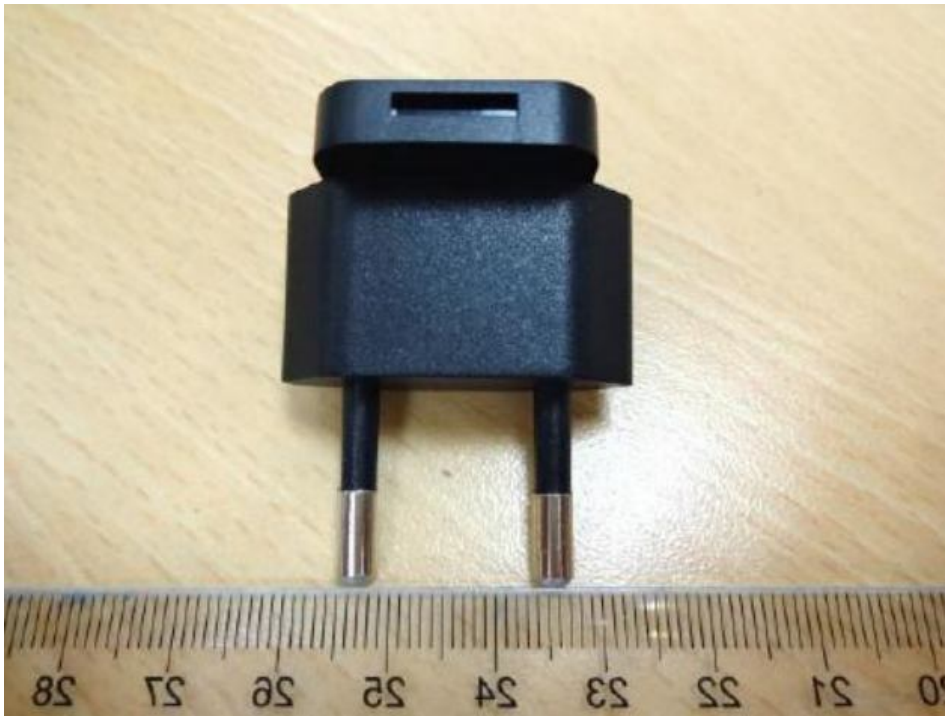
Appendix: Photos of Brazilian plug portion