TEST REPORT

Reference No.	:	WTX22X10208888E
Applicant	:	GlobTek, Inc.
Address	:	186 Veterans Dr. Northvale, NJ 07647 USA
Manufacturer	:	1: GlobTek, Inc.2: GlobTek (Suzhou) Co., Ltd
Address	:	1: 186 Veterans Dr. Northvale, NJ 07647 USA 2: Building 4, No. 76, Jin Ling East Rd., Suzhou Industrial Park, Suzhou, JiangSu 215021, China
Product Name	:	ICT/ITE POWER SUPPLY
Model No.	:	GT-43001130505
Standards	:	**EN 55032:2015+A1:2020** **EN IEC 61000-3-2:2019+A1:2021** **EN 61000-3-3:2013+A1:2019+A2:2021** **EN 55035:2017+A11:2020**
Date of Receipt sample	:	2022-10-24
Date of Test	:	2022-10-24 to 2023-02-13
Date of Issue	:	2023-02-13
Test Report Form No.	:	WTX_EN 55032_2015_B
Test Result	:	**Compliant**

Remarks:

The results shown in this test report refer only to the sample(s) tested, this test report cannot be reproduced, except in full, without prior written permission of the company. The report would be invalid without specific stamp of test institute and the signatures of approver.

Prepared By:

Waltek Testing Group (Shenzhen) Co., Ltd.

Address: 1/F., Room 101, Building 1, Hongwei Industrial Park, Liuxian 2nd Road, Block 70 Bao'an District, Shenzhen, Guangdong, China

Tel.: +86-755-33663308 Fax.: +86-755-33663309 Email: sem@waltek.com.cn

Tested by: Toby Zhang

Toby Zhang

Approved by: Silin Chen

Silin Chen

TABLE OF CONTENTS

Report version

Version No.	Date of issue	Description
Rev.00	2023-02-13	Original
/	/	/

1. GENERAL INFORMATION

1.1 Product Description for Equipment Under Test (EUT)

General Description of EUT	
Product Name:	ICT/ITE POWER SUPPLY
Trade Name:	GlobTek, Inc.
Model No.:	GT-43001130505
Adding Model(s):	/
Note: The test data is gathered from a production sample, provided by the manufacturer.	

Technical Characteristics of EUT	
Power Supply:	AC 100-240V~ 50-60Hz, 0.6 A
Power Adaptor:	/
Cable:	AC line *1 (length 0.5m, Unshielded, without Ferrite, without chip)
Rated Power:	10W
Rated Current:	2.2A
Highest Internal Frequency:	Below 108MHz
Classification of Equipment:	Class B

1.2 Test Standards

The tests were performed according to following standards:

EN 55032:2015+A1:2020: Electromagnetic compatibility of multimedia equipment - Emission requirements
EN IEC 61000-3-2:2019+A1:2021: Electromagnetic compatibility (EMC) -- Part 3-2: Limits - Limits for harmonic current emissions (equipment input current up to and including 16A per phase)
EN 61000-3-3:2013+A1:2019+A2:2021: Electromagnetic compatibility (EMC) -- Part 3-3: Limits - Limitation of voltage changes, voltage fluctuations and flicker in public low-voltage supply systems, for equipment with rated current ≤ 16A per phase and not subject to conditional connection
EN 55035:2017+A11:2020: Electromagnetic compatibility of multimedia equipment - Immunity requirements.
Maintenance of compliance is the responsibility of the manufacturer. Any modification of the product maybe which result in lowering the emission/immunity should be checked to ensure compliance has been maintained.

1.3 Test Location

Laboratory: Waltek Testing Group (Shenzhen) Co., Ltd.
Address: 1/F., Room 101, Building 1, Hongwei Industrial Park, Liuxian 2nd Road, Block 70 Bao'an District, Shenzhen, Guangdong, China

1.4 EUT Setup and Operation Mode

The equipment under test (EUT) was configured to measure its highest possible emission/immunity level. The test modes were adapted according to the operation manual for use, more detailed description as follows:

No	Title	Description
TM1	Normal work 1	AC 230V
TM2	Normal work 2	AC 230V

Auxiliary Equipment List and Details			
Description	Manufacturer	Model	Serial Number
Cement load	/	/	/

1.5 Measurement Uncertainty

Test Item	Measurement Uncertainty
Conducted Emissions (AC Mains 150k - 30MHz)	±3.34dB
Radiated Emissions (30M - 1000MHz)	±5.56dB

1.6 Test Equipment List and Details

Conducted emissions from AC mains power ports (150kHz-30MHz)					
Description	**Manufacturer**	**Model**	**Serial No.**	**Cal. Date**	**Due. Date**
8-WIRE LISN	Schwarz beck	8158	CAT5-8158-0117	2022-03-22	2023-03-21
8-WIRE LISN	Schwarz beck	8158	CAT3-8158-0059	2022-03-22	2023-03-21
AC LISN	Schwarz beck	NSLK8126	8126-224	2022-03-22	2023-03-21
Pulse Limiter	Rohde & Schwarz	ESH3-Z2	100911	2022-03-25	2023-03-24
EMI Test Receiver	Rohde & Schwarz	ESPI	101611	2022-03-22	2023-03-21

Radiated emissions (30MHz-1GHz)					
Description	**Manufacturer**	**Model**	**Serial No.**	**Cal. Date**	**Due. Date**
EMI Test Receiver	Rohde & Schwarz	ESPI	101391	2022-03-25	2023-03-24
Amplifier	Agilent	8447D	2944A10179	2022-03-22	2023-03-21
Trilog Broadband Antenna	Schwarz beck	VULB9163(B)	9163-635	2021-04-09	2023-04-08

Harmonic current emission					
Description	**Manufacturer**	**Model**	**Serial No.**	**Cal. Date**	**Due. Date**
Power Source	California Instrument	5001IX-CTS-400	25965	2022-03-22	2023-03-21
Digital Power Analyzer	California Instrument	CTS	72831	2022-03-22	2023-03-21

Voltage fluctuations and flicker					
Description	**Manufacturer**	**Model**	**Serial No.**	**Cal. Date**	**Due. Date**
Power Source	California Instrument	5001IX-CTS-400	25965	2022-03-22	2023-03-21
Digital Power Analyzer	California Instrument	CTS	72831	2022-03-22	2023-03-21

Electrostatic discharges					
Description	**Manufacturer**	**Model**	**Serial No.**	**Cal. Date**	**Due. Date**
ESD Generator	LIONCEL	ESD-203B	0170901	2022-03-28	2023-03-27

RF electromagnetic field disturbances					
Description	**Manufacturer**	**Model**	**Serial No.**	**Cal. Date**	**Due. Date**
Power Meter	Agilent	E4419B	GB42420578	2022-03-22	2023-03-21
Antenna	SCHWARZBECK	STLP 9129	9129 114	/	/
RF Power Amplifier	MicoTop	MPA-1000-6000-100	MPA1906238	2022-03-22	2023-03-21
RF Power Amplifier	MicoTop	MPA-80-1000-250	MPA1906239	2022-03-22	2023-03-21

Power Sensor	Agilent	E9304A	MY55081055	2022-03-25	2023-03-24
Power Sensor	Agilent	E9301A	MY52450001	2022-03-25	2023-03-24
Signal Generator	HP	8688B	3438A00604	2022-03-22	2023-03-21

Electrical fast transients / burst for AC mains power ports					
Description	**Manufacturer**	**Model**	**Serial No.**	**Cal. Date**	**Due. Date**
Couple Clamp	EMC PARTNER	CN-EFT1000	513	2022-03-22	2023-03-21
Transient 2000	EMC PARTNER	TRA2000	863	2022-03-22	2023-03-21

Surges for AC mains power ports					
Description	**Manufacturer**	**Model**	**Serial No.**	**Cal. Date**	**Due. Date**
Couple Clamp	EMC PARTNER	CN-EFT1000	513	2022-03-22	2023-03-21
Transient 2000	EMC PARTNER	TRA2000	863	2022-03-22	2023-03-21

Continuous induced RF disturbances for AC mains power ports (150kHz-80MHz)					
Description	**Manufacturer**	**Model**	**Serial No.**	**Cal. Date**	**Due. Date**
EM Clamp	TESEQ	KEMZ801A	45028	2022-03-25	2023-03-24
CDN	LIONCEL	CDN-T8	0210401	2022-03-25	2023-03-24
CDN	Luthi	L-801M2/M3	2665	2022-03-22	2023-03-21
Attenuator	EMTEST	MA-5100/6BF2	1009	2022-03-22	2023-03-21
CONDUCTED IMMUNITY TEST SYSTEM	FRANKONIA	CIT-10/75	126B1247/2013	2022-12-30	2023-12-29

Power frequency magnetic field					
Description	**Manufacturer**	**Model**	**Serial No.**	**Cal. Date**	**Due. Date**
Instantaneous PMF Generator Module	LIONCEL	PMF-801C-T	0171001	2022-03-22	2023-03-21
PMF Antenna	LIONCEL	PMF-801C-A	0180302	2022-03-22	2023-03-21
PMF Generator	LIONCEL	PMF-801C-C	0171101	2022-03-22	2023-03-21

Voltage dips and interruptions					
Description	**Manufacturer**	**Model**	**Serial No.**	**Cal. Date**	**Due. Date**
Couple Clamp	EMC PARTNER	CN-EFT1000	513	2022-03-22	2023-03-21
Transient 2000	EMC PARTNER	TRA2000	863	2022-03-22	2023-03-21

2. SUMMARY OF TEST RESULTS

Item	Standard	Method	Result
Conducted emissions from AC mains power ports (150kHz-30MHz)	EN 55032:2015+A1:2020	EN 55032:2015+A1:2020	Compliant
Radiated emissions (30MHz-1GHz)	EN 55032:2015+A1:2020	EN 55032: 2015+A1:2020	Compliant
Harmonic current emission	EN IEC 61000-3-2:2019+A1:2021	EN IEC 61000-3-2:2019+A1:2021	Compliant
Voltage fluctuations and flicker	EN 61000-3-3:2013+A1:2019+A2: 2021	EN 61000-3-3: 2013+A1:2019+A2:2021	Compliant
Electrostatic discharges	EN 55035:2017+A11:2020	EN 61000-4-2: 2009	Compliant
RF electromagnetic field disturbances	EN 55035:2017+A11:2020	EN IEC 61000-4-3: 2020	Compliant
Electrical fast transients / burst for AC mains power ports	EN 55035:2017+A11:2020	EN 61000-4-4: 2012	Compliant
Surges for AC mains power ports	EN 55035:2017+A11:2020	EN 61000-4-5: 2014 +A1: 2017	Compliant
Continuous induced RF disturbances for AC mains power ports (150kHz-80MHz)	EN 55035:2017+A11:2020	EN 61000-4-6: 2014	Compliant
Power frequency magnetic field	EN 55035:2017+A11:2020	EN 61000-4-8: 2010	Compliant
Voltage dips and interruptions	EN 55035:2017+A11:2020	EN IEC 61000-4-11:2020	Compliant

3. Emission Test Results (EMI)

3.1 Harmonic current emission

Test Requirement:	Class A
Test Limit:	Not specified

3.1.1 E.U.T. Operation

Environmental Conditions	
Temperature:	23.5 °C
Relative Humidity:	53 %
Atmospheric Pressure:	998 mbar
Test mode:	TM1, TM2

3.1.2 Summary of Test Results

Refer to EN IEC 61000-3-2 clause 7.1:
"For the following categories of equipment, limits are not specified in this document:
– lighting equipment with a rated power less than but not equal to 5 W;
– equipment with a rated power of 75 W or less, other than lighting equipment;"
Since the rated power of the EUT is less than 75W, harmonic current test is not needed.

4. Emission Test Results (EMI)

4.1 Conducted emissions from AC mains power ports (150kHz-30MHz)

Test Requirement:	Class B		
Test Limit:	**Frequency Range**	**Limit (Quasi-Peak)**	**Limit (Average)**
	0.15MHz to 0.5MHz	66dB(μV) to 56dB(μV)	56dB(μV) to 46dB(μV)
	0.5MHz to 5MHz	56dB(μV)	46dB(μV)
	5MHz to 30MHz	60dB(μV)	50dB(μV)
	Detector:	Peak for pre-scan (9kHz resolution bandwidth) 0.15M to 30MHz	
Test Method:	EN 55032:2015+A1:2020		
Procedure:	An initial pre-scan was performed with peak detector.Quasi-Peak or Average measurement were performed at the frequencies with maximized peak emission were detected. Remark: Level= Read Level+ Cable Loss+ LISN Factor		

4.1.1 E.U.T. Operation

Environmental Conditions	
Temperature:	23.5 °C
Relative Humidity:	54 %
Atmospheric Pressure:	998 mbar
Test mode:	TM1, TM2

4.1.2 Basic Test Setup Block Diagram

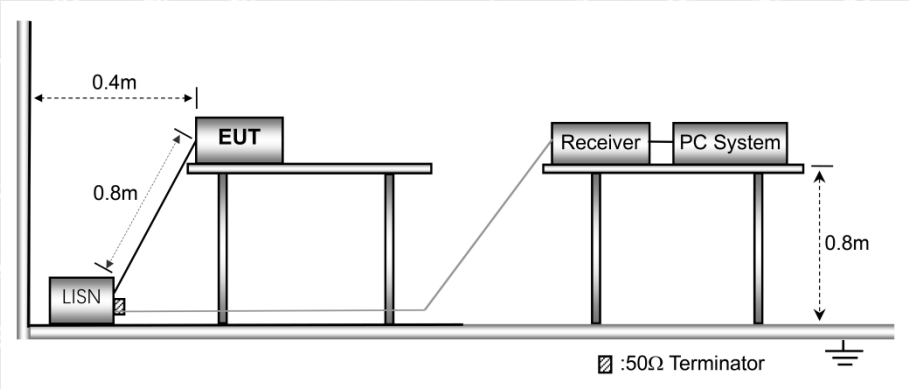

4.1.3 Summary of Test Results

TM1 / Line: Line

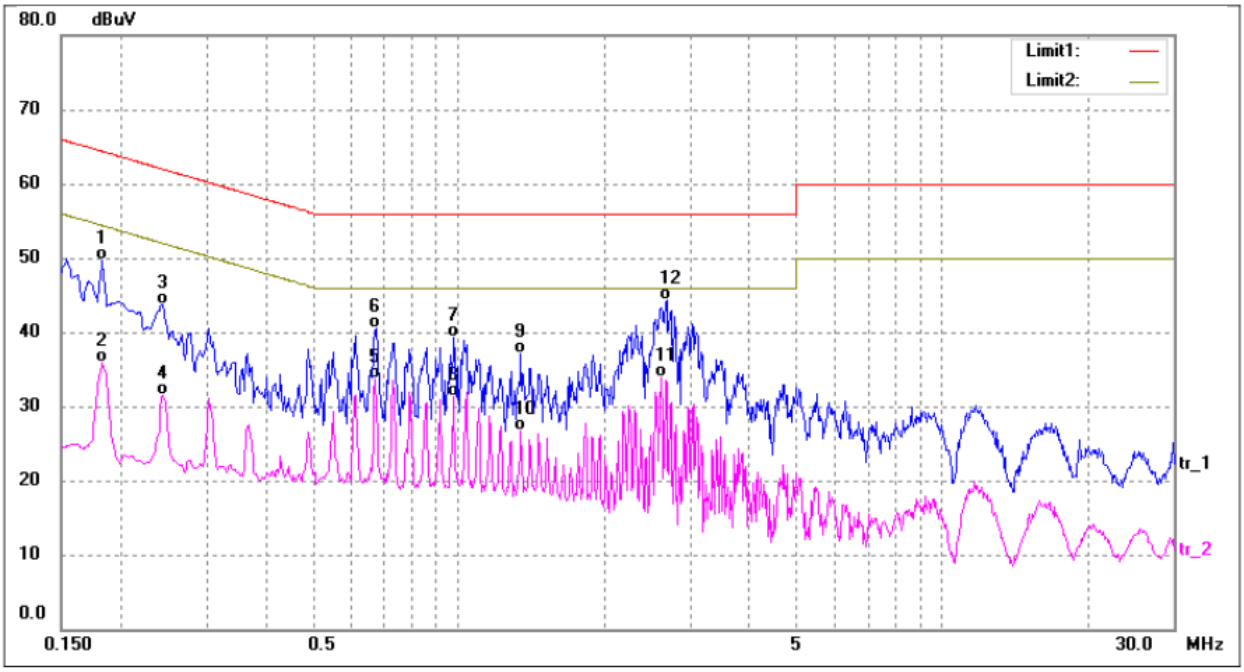

No.	Frequency (MHz)	Reading (dBuV)	Correct (dB)	Result (dBuV)	Limit (dBuV)	Margin (dB)	Detector
1	0.1819	39.39	10.31	49.70	64.39	-14.69	QP
2	0.1819	25.65	10.31	35.96	54.39	-18.43	AVG
3	0.2420	33.48	10.27	43.75	62.02	-18.27	QP
4	0.2420	21.31	10.27	31.58	52.02	-20.44	AVG
5	0.6700	23.58	10.20	33.78	46.00	-12.22	AVG
6	0.6740	30.35	10.20	40.55	56.00	-15.45	QP
7	0.9740	29.08	10.14	39.22	56.00	-16.78	QP
8	0.9740	21.13	10.14	31.27	46.00	-14.73	AVG
9	1.3380	26.91	10.17	37.08	56.00	-18.92	QP
10	1.3380	16.51	10.17	26.68	46.00	-19.32	AVG
11	2.6180	23.59	10.27	33.86	46.00	-12.14	AVG
12*	2.6820	34.04	10.27	44.31	56.00	-11.69	QP

TM1 / Line: Neutral

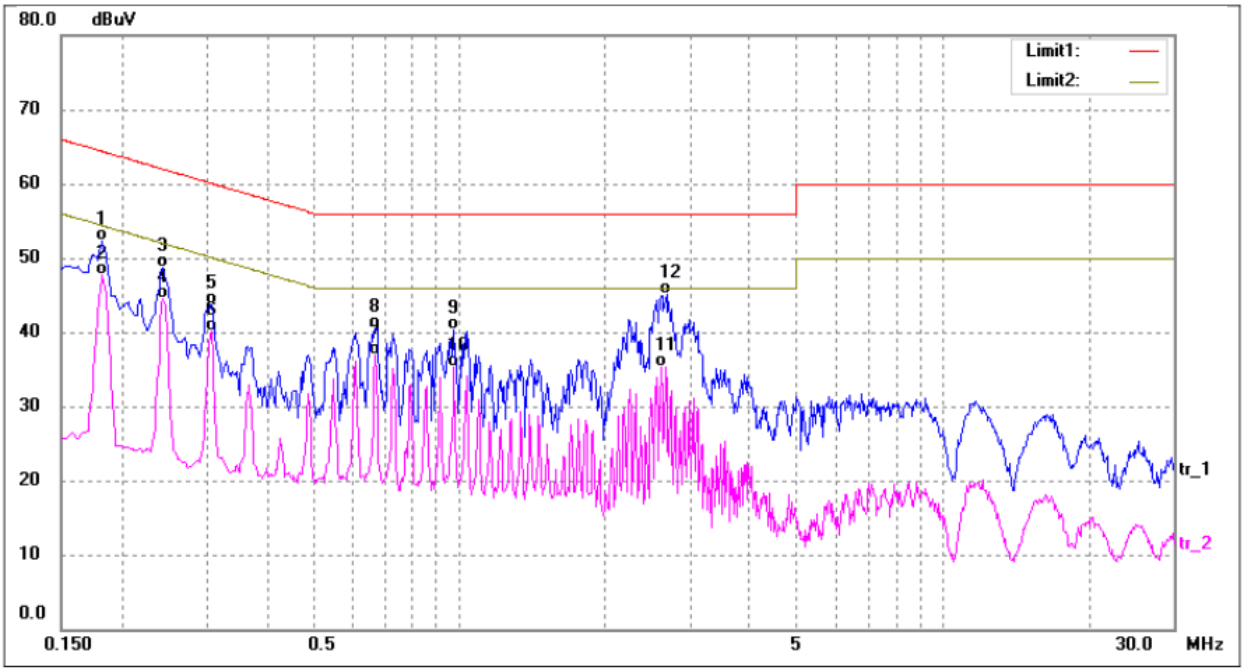

No.	Frequency	Reading	Correct	Result	Limit	Margin	Detector
	(MHz)	(dBuV)	(dB)	(dBuV)	(dBuV)	(dB)	
1	0.1819	42.06	10.31	52.37	64.39	-12.02	QP
2*	0.1819	37.44	10.31	47.75	54.39	-6.64	AVG
3	0.2420	38.52	10.27	48.79	62.02	-13.23	QP
4	0.2420	34.23	10.27	44.50	52.02	-7.52	AVG
5	0.3060	33.56	10.24	43.80	60.08	-16.28	QP
6	0.3060	29.85	10.24	40.09	50.08	-9.99	AVG
7	0.6700	26.77	10.20	36.97	46.00	-9.03	AVG
8	0.6740	30.39	10.20	40.59	56.00	-15.41	QP
9	0.9740	30.24	10.14	40.38	56.00	-15.62	QP
10	0.9740	25.10	10.14	35.24	46.00	-10.76	AVG
11	2.6180	25.03	10.27	35.30	46.00	-10.70	AVG
12	2.6860	34.76	10.27	45.03	56.00	-10.97	QP

TM2 / Line: Line

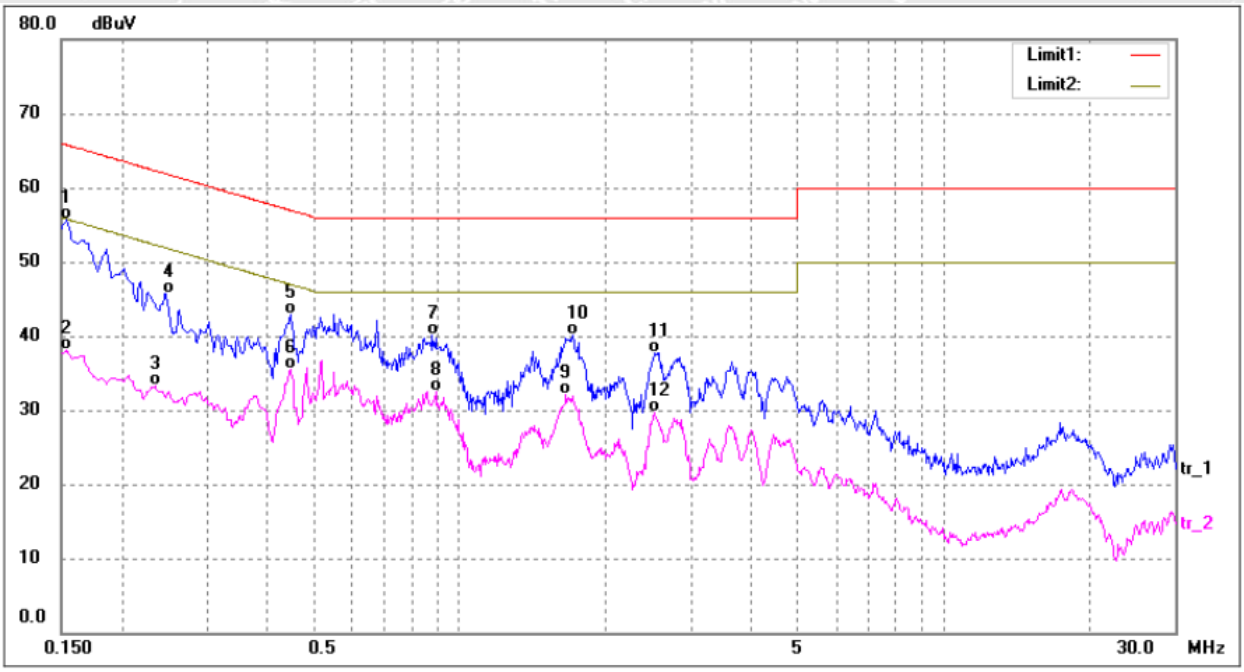

No.	Frequency	Reading	Correct	Result	Limit	Margin	Detector
	(MHz)	(dBuV)	(dB)	(dBuV)	(dBuV)	(dB)	
1*	0.1539	45.45	10.32	55.77	65.78	-10.01	QP
2	0.1539	27.71	10.32	38.03	55.78	-17.75	AVG
3	0.2340	22.96	10.27	33.23	52.30	-19.07	AVG
4	0.2460	35.50	10.27	45.77	61.89	-16.12	QP
5	0.4460	32.60	10.23	42.83	56.95	-14.12	QP
6	0.4460	25.34	10.23	35.57	46.95	-11.38	AVG
7	0.8780	29.87	10.16	40.03	56.00	-15.97	QP
8	0.8940	22.37	10.16	32.53	46.00	-13.47	AVG
9	1.6620	21.83	10.22	32.05	46.00	-13.95	AVG
10	1.7140	29.87	10.22	40.09	56.00	-15.91	QP
11	2.5180	27.51	10.26	37.77	56.00	-18.23	QP
12	2.5180	19.49	10.26	29.75	46.00	-16.25	AVG

TM2 / Line: Neutral

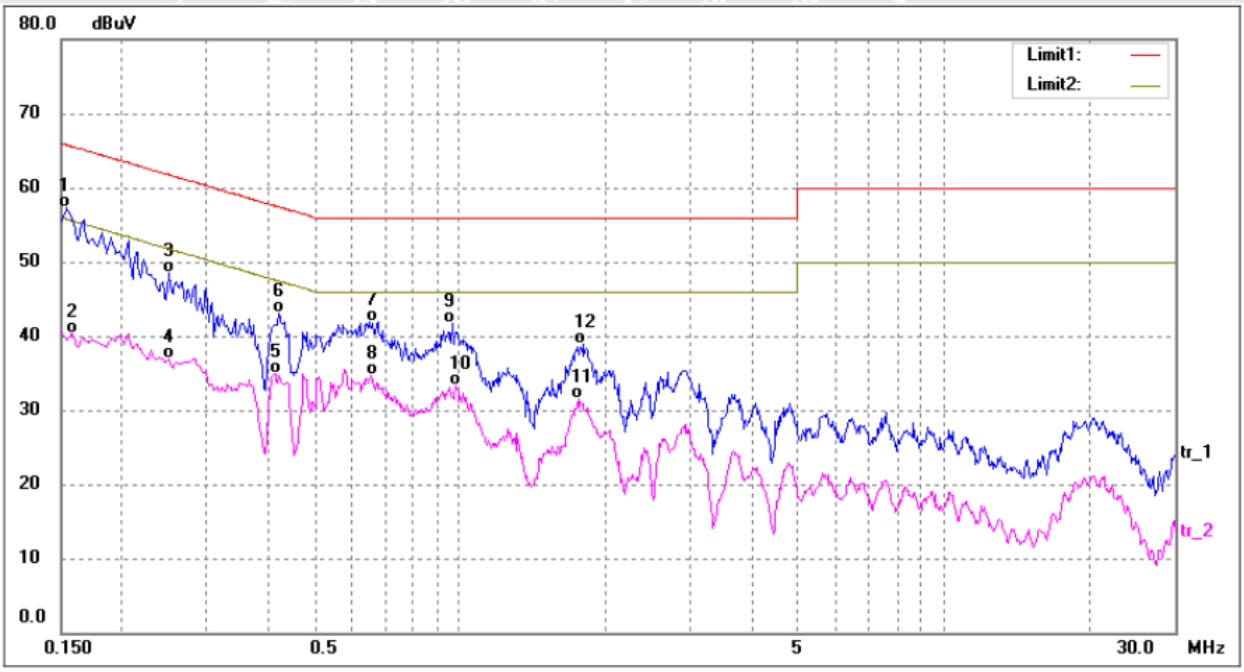

No.	Frequency	Reading	Correct	Result	Limit	Margin	Detector
	(MHz)	(dBuV)	(dB)	(dBuV)	(dBuV)	(dB)	
1*	0.1539	46.91	10.32	57.23	65.78	-8.55	QP
2	0.1580	30.07	10.31	40.38	55.56	-15.18	AVG
3	0.2500	38.23	10.26	48.49	61.75	-13.26	QP
4	0.2500	26.74	10.26	37.00	51.75	-14.75	AVG
5	0.4140	24.71	10.22	34.93	47.57	-12.64	AVG
6	0.4220	32.84	10.22	43.06	57.41	-14.35	QP
7	0.6500	31.74	10.20	41.94	56.00	-14.06	QP
8	0.6540	24.58	10.20	34.78	46.00	-11.22	AVG
9	0.9660	31.48	10.14	41.62	56.00	-14.38	QP
10	0.9820	23.20	10.14	33.34	46.00	-12.66	AVG
11	1.7620	21.20	10.23	31.43	46.00	-14.57	AVG
12	1.7940	28.61	10.23	38.84	56.00	-17.16	QP

4.2 Radiated emissions (30MHz-1GHz)

Test Requirement:	Class B		
Test Limit:	**Frequency (MHz)**	**Limit [dB(uV/m) at 10m]**	**Limit [dB(uV/m) at 3m]**
	30 to 230	30	40
	230 to 1000	37	47
	Detector:	Peak for pre-scan (120kHz resolution bandwidth) 30M to 1000MHz	
Test Method:	EN 55032: 2015+A1:2020		
Procedure:	An initial pre-scan was performed in the chamber using the spectrum analyser in peak detection mode. Quasi-peak measurements were conducted based on the peak sweep graph. The EUT was measured by BiConiLog antenna with 2 orthogonal polarities. Remark: Level= Read Level+ Cable Loss+ Antenna Factor- Preamp Factor		

4.2.1 E.U.T. Operation

Environmental Conditions	
Temperature:	23.5 °C
Relative Humidity:	54 %
Atmospheric Pressure:	998 mbar
Test mode:	TM1, TM2

4.2.2 Basic Test Setup Block Diagram

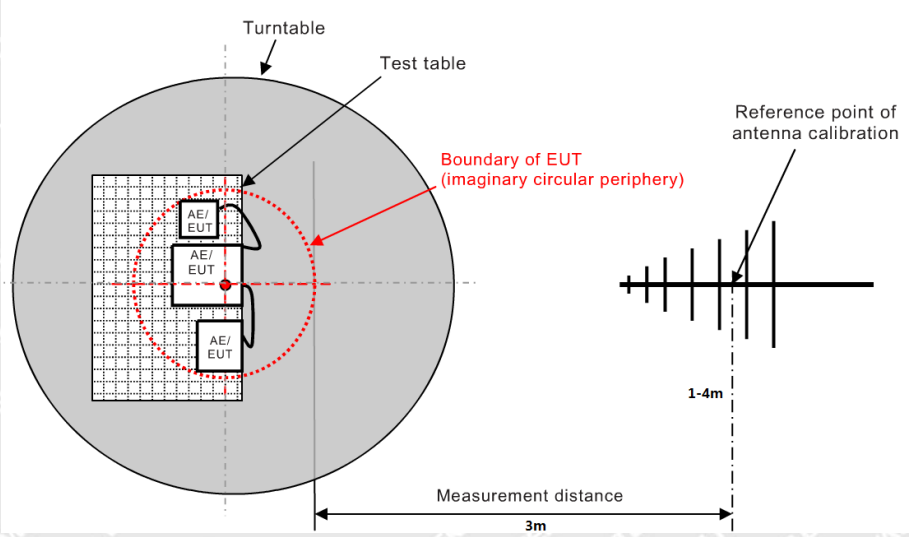

4.2.3 Summary of Test Results

TM1 / Polarization: Horizontal

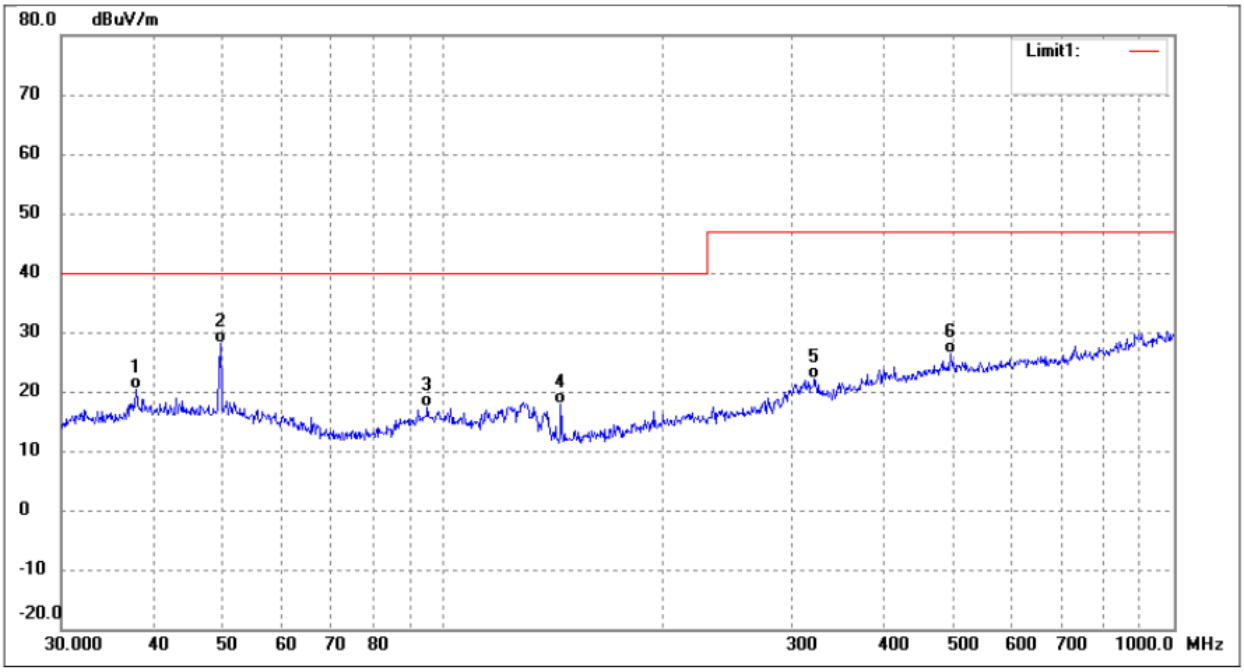

No.	Frequency	Reading	Correct	Result	Limit	Margin	Degree	Height	Remark
	(MHz)	(dBuV/m)	dB/m	(dBuV/m)	(dBuV/m)	(dB)	(deg.)	(cm)	
1	37.9450	30.47	-9.98	20.49	40.00	-19.51	96	100	QP
2	49.5328	37.76	-9.66	28.10	40.00	-11.90	210	100	QP
3	95.0930	28.68	-11.24	17.44	40.00	-22.56	273	100	QP
4	144.8418	31.86	-14.09	17.77	40.00	-22.23	315	100	QP
5	322.1886	29.71	-7.60	22.11	47.00	-24.89	98	100	QP
6	494.1984	29.93	-3.53	26.40	47.00	-20.60	160	100	QP

TM1 / Polarization: Vertical

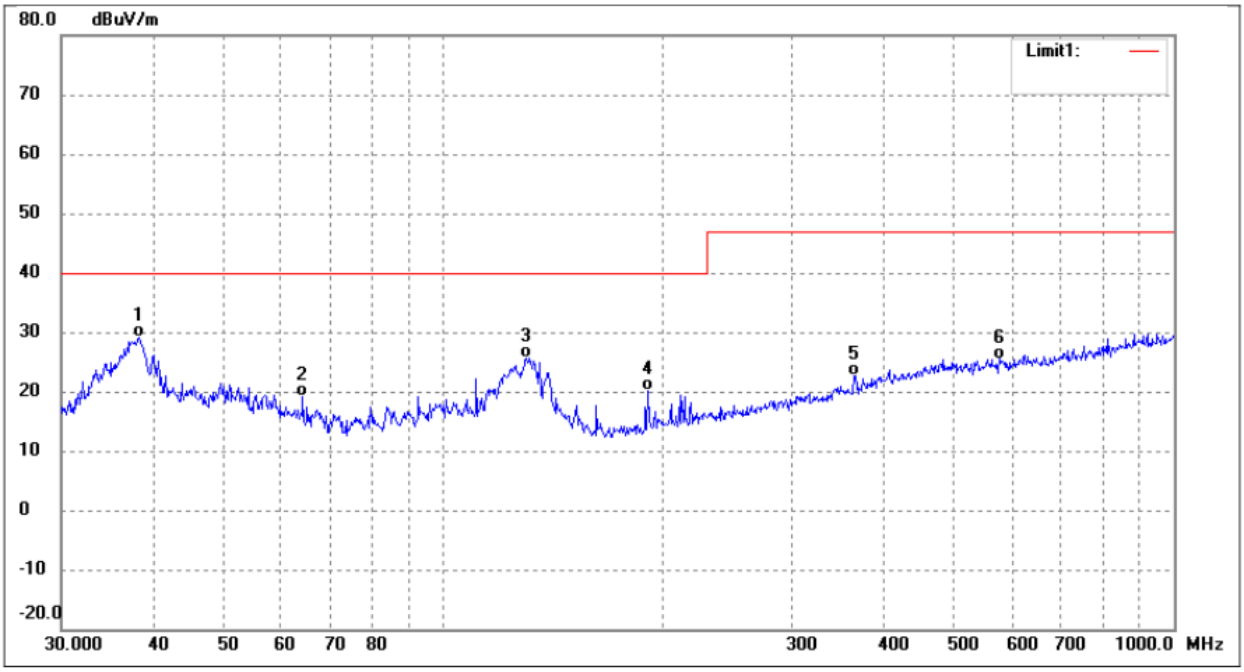

No.	Frequency	Reading	Correct	Result	Limit	Margin	Degree	Height	Remark
	(MHz)	(dBuV/m)	dB/m	(dBuV/m)	(dBuV/m)	(dB)	(deg.)	(cm)	
1	38.3462	39.14	-9.91	29.23	40.00	-10.77	305	100	QP
2	64.2074	31.83	-12.67	19.16	40.00	-20.84	271	100	QP
3	129.9226	39.27	-13.61	25.66	40.00	-14.34	95	100	QP
4	190.4050	31.75	-11.69	20.06	40.00	-19.94	168	100	QP
5	364.2595	28.84	-6.21	22.63	47.00	-24.37	241	100	QP
6	576.6443	28.60	-3.10	25.50	47.00	-21.50	327	100	QP

TM2 / Polarization: Horizontal

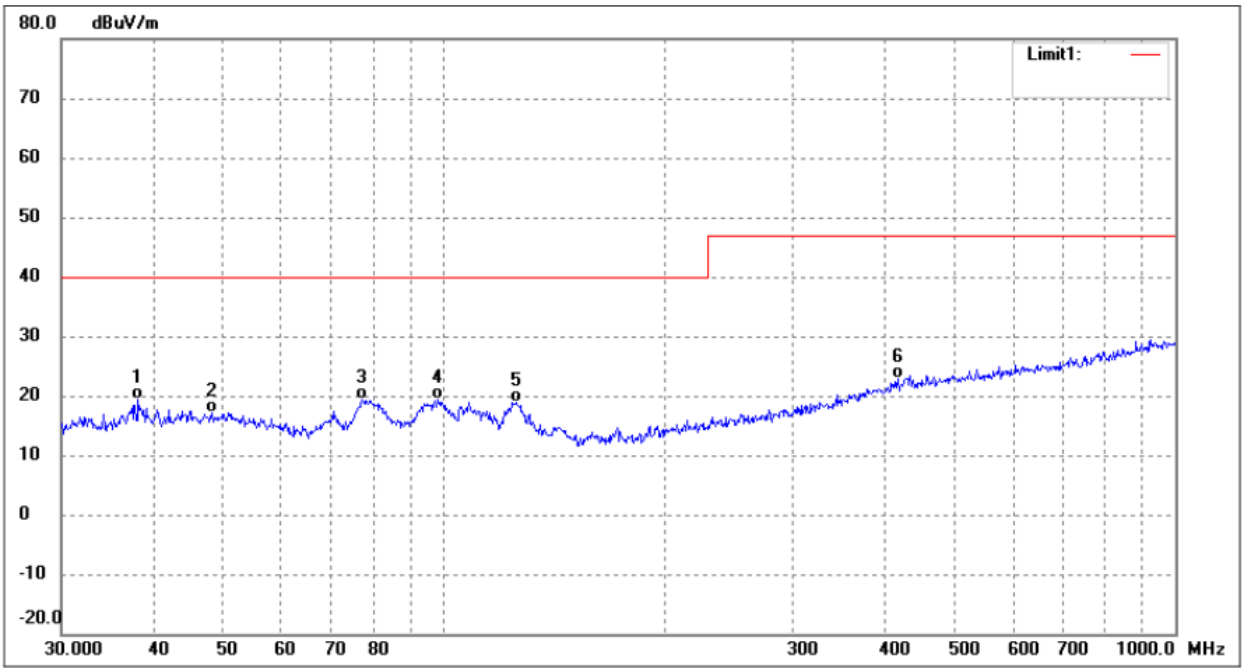

No.	Frequency	Reading	Correct	Result	Limit	Margin	Degree	Height	Remark
	(MHz)	(dBuV/m)	dB/m	(dBuV/m)	(dBuV/m)	(dB)	(deg.)	(cm)	
1	38.2120	30.58	-11.22	19.36	40.00	-20.64	159	100	QP
2	48.1626	28.07	-10.89	17.18	40.00	-22.82	241	100	QP
3	77.3212	34.58	-15.16	19.42	40.00	-20.58	165	100	QP
4	98.1419	31.51	-12.20	19.31	40.00	-20.69	76	100	QP
5	125.4457	33.33	-14.40	18.93	40.00	-21.07	315	100	QP
6	417.6411	28.41	-5.58	22.83	47.00	-24.17	125	100	QP

TM2 / Polarization: Vertical

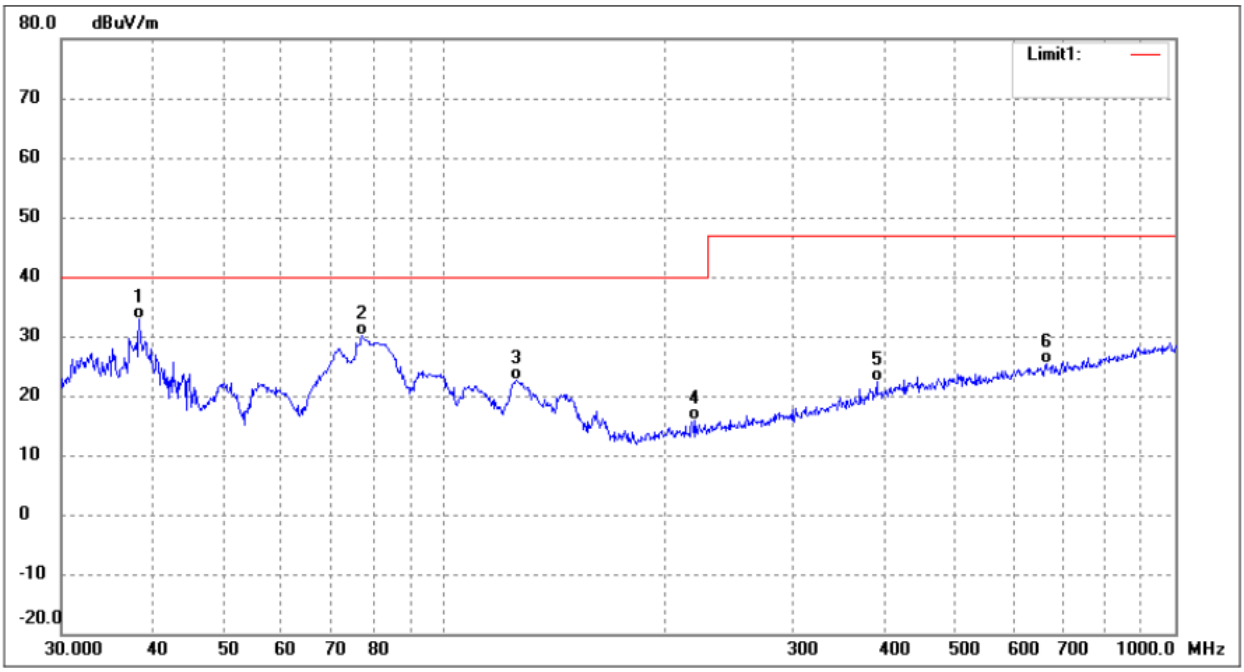

No.	Frequency	Reading	Correct	Result	Limit	Margin	Degree	Height	Remark
	(MHz)	(dBuV/m)	dB/m	(dBuV/m)	(dBuV/m)	(dB)	(deg.)	(cm)	
1	38.3462	44.01	-11.20	32.81	40.00	-7.19	86	100	QP
2	77.3212	45.25	-15.16	30.09	40.00	-9.91	154	100	QP
3	125.8864	37.04	-14.45	22.59	40.00	-17.41	264	100	QP
4	220.6171	27.58	-11.80	15.78	40.00	-24.22	91	100	QP
5	390.7226	29.00	-6.50	22.50	47.00	-24.50	89	100	QP
6	665.8035	28.67	-3.21	25.46	47.00	-21.54	152	100	QP

4.3 Voltage fluctuations and flicker

Test Requirement:	Clause 4
Test Limit:	Clause 5
Test Method:	EN 61000-3-3: 2013+A1:2019+A2:2021

4.3.1 E.U.T. Operation

Environmental Conditions	
Temperature:	23.5 °C
Relative Humidity:	53 %
Atmospheric Pressure:	998 mbar
Test mode:	TM1, TM2

4.3.2 Basic Test Setup Block Diagram

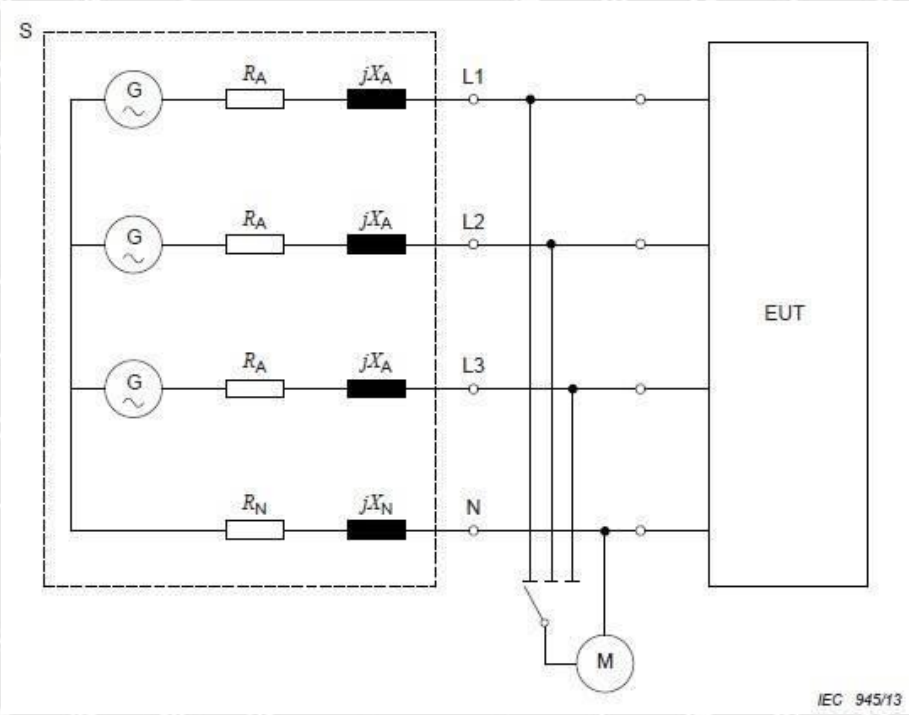

4.3.3 Summary of Test Results

Flicker Test Summary per IEC61000-3-3:2013+AMD2:2021 (Run time)

Comment: TM1

Customer: Customer information

Test Result: Pass **Status: Test Completed**

Pst_i and limit line **European Limits**

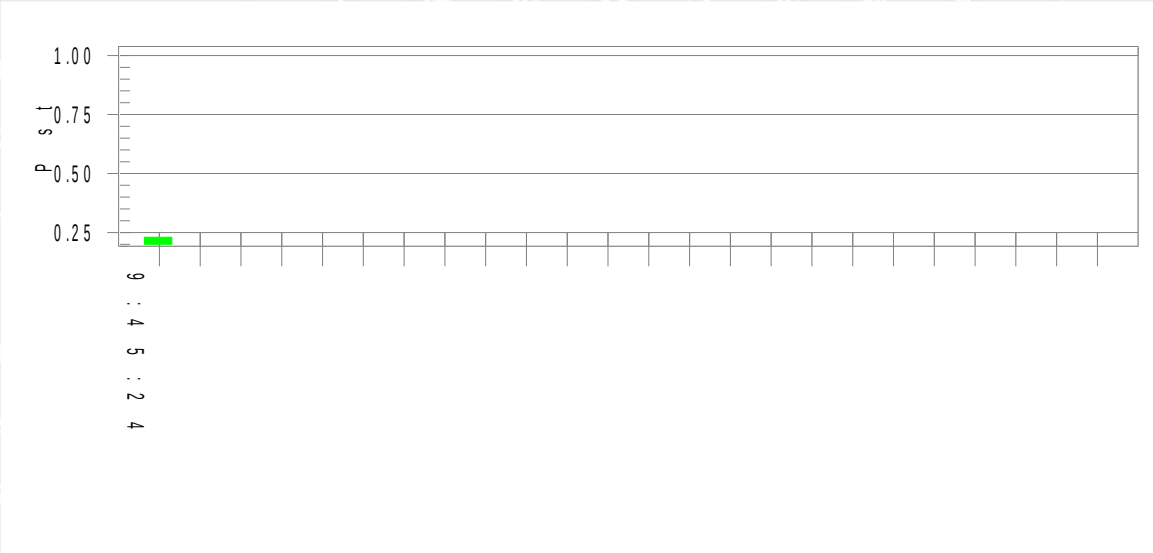

Plt and limit line

Parameter values recorded during the test:

Vrms at the end of test (Volt):	**230.03**			
Highest dt (%):		**Test limit (%):**		
T-max (mS):	**0**	**Test limit (mS):**	**500.0**	**Pass**
Highest dc (%):	**0.00**	**Test limit (%):**	**3.30**	**Pass**
Highest dmax (%):	**0.00**	**Test limit (%):**	**4.00**	**Pass**
Highest Pst (10 min. period):	**0.230**	**Test limit:**	**1.000**	**Pass**
Highest Plt (2 hr. period):	**0.101**	**Test limit:**	**0.650**	**Pass**

Flicker Test Summary per IEC61000-3-3:2013+AMD2:2021 (Run time)

Comment: TM2

Customer: Customer information

Test Result: Pass **Status: Test Completed**

Pst_i and limit line **European Limits**

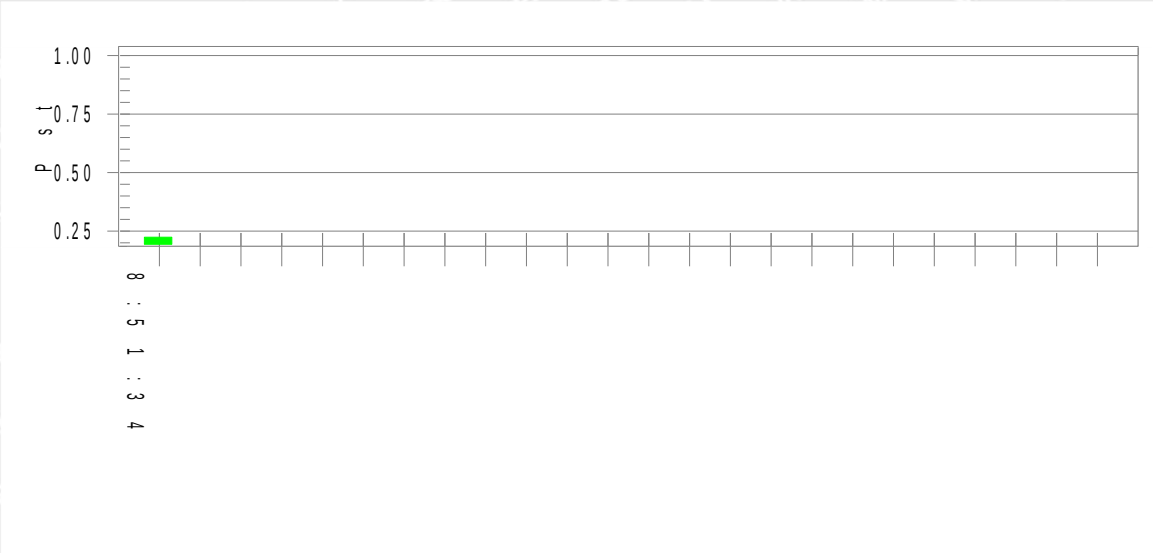

Plt and limit line

Parameter values recorded during the test:

Vrms at the end of test (Volt):	**230.00**			
Highest dt (%):		**Test limit (%):**		
T-max (mS):	**0**	**Test limit (mS):**	**500.0**	**Pass**
Highest dc (%):	**0.00**	**Test limit (%):**	**3.30**	**Pass**
Highest dmax (%):	**0.00**	**Test limit (%):**	**4.00**	**Pass**
Highest Pst (10 min. period):	**0.224**	**Test limit:**	**1.000**	**Pass**
Highest Plt (2 hr. period):	**0.098**	**Test limit:**	**0.650**	**Pass**

5. Immunity Test Results (EMS)

Performance Criteria Description in EN 55035

General Performance Criteria

Performance Criteria A

The equipment shall continue to operate as intended without operator intervention. No degradation of performance, loss of function or change of operating state is allowed below a performance level specified by the manufacturer when the equipment is used as intended.

The performance level may be replaced by a permissible loss of performance. If the minimum performance level or the permissible performance loss is not specified by the manufacturer, then either of these may be derived from the product description and documentation, and by what the user may reasonably expect from the equipment if used as intended.

Performance Criteria B

During the application of the disturbance, degradation of performance is allowed. However, no unintended change of actual operating state or stored data is allowed to persist after the test.

After the test, the equipment shall continue to operate as intended without operator intervention; no degradation of performance or loss of function is allowed, below a performance level specified by the manufacturer, when the equipment is used as intended.

The performance level may be replaced by a permissible loss of performance.

If the minimum performance level (or the permissible performance loss), or recovery time, is not specified by the manufacturer, then either of these may be derived from the product description and documentation, and by what the user may reasonably expect from the equipment if used as intended.

Performance Criteria C

Loss of function is allowed, provided the function is self-recoverable, or can be restored by the operation of the controls by the user in accordance with the manufacturer's instructions. A reboot or re-start operation is allowed. Information stored in non-volatile memory, or protected by a battery backup, shall not be lost.

5.1 Electrostatic discharges

Test Requirement:	Contact Discharge: +/- 4kV Air Discharge: +/- 8kV
Test Method:	EN 61000-4-2: 2009
Procedure:	Discharge Impedance: 330Ω/150pF Number of Discharge: Minimum 10 times at each test point Discharge Mode: Single Discharge Discharge Period: 1 second minimum
Performance Criteria:	B

5.1.1 E.U.T. Operation

Environmental Conditions	
Temperature:	21.5 °C
Relative Humidity:	51 %
Atmospheric Pressure:	998 mbar
Test mode:	TM1, TM2

5.1.2 Basic Test Setup Block Diagram

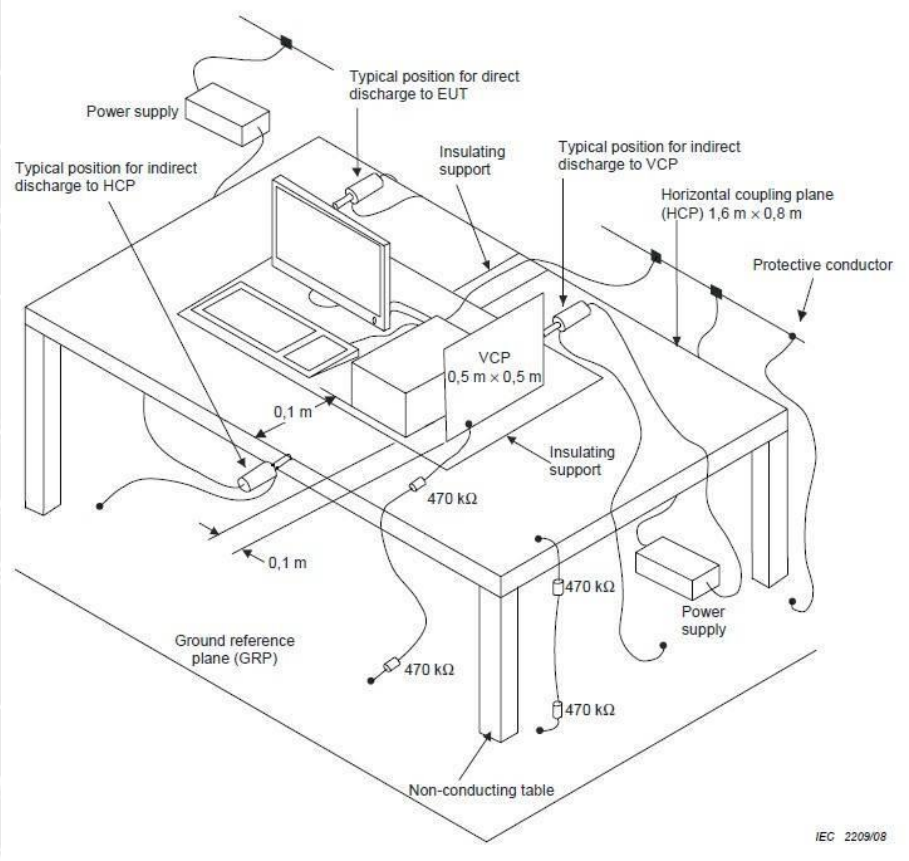

5.1.3 Summary of Test Results

Discharge type	Volt (kV)	Polarity	Test Point	Result/ Observations
Air discharge	2,4,8	+	1	A
Air discharge	2,4,8	-	1	A
Contact discharge	4	+	2	A
Contact discharge	4	-	2	A
Horizontal Coupling	4	+	3	A
Horizontal Coupling	4	-	3	A
Vertical Coupling	4	+	3	A
Vertical Coupling	4	-	3	A

Test Point: 1. All insulated enclosure and seams.

2. All accessible metal parts of the enclosure.

3. All side.

A: No degradation in the performance of the EUT was observed.

5.2 RF electromagnetic field disturbances

Test Requirement:	10V/m, 80%, 1kHz Amp. Mod.
Test Method:	EN IEC 61000-4-3: 2020
Procedure:	Frequency Range: 80MHz to 1GHz, 1800MHz, 2600MHz, 3500MHz, 5000MHz Antenna Polarisation: Vertical and Horizontal Modulation: 1kHz,80% Amp. Mod,1% increment Dwell Time: 1s
Performance Criteria:	A

5.2.1 E.U.T. Operation

Environmental Conditions	
Temperature:	23.5 °C
Relative Humidity:	53 %
Atmospheric Pressure:	998 mbar
Test mode:	TM1, TM2

5.2.2 Basic Test Setup Block Diagram

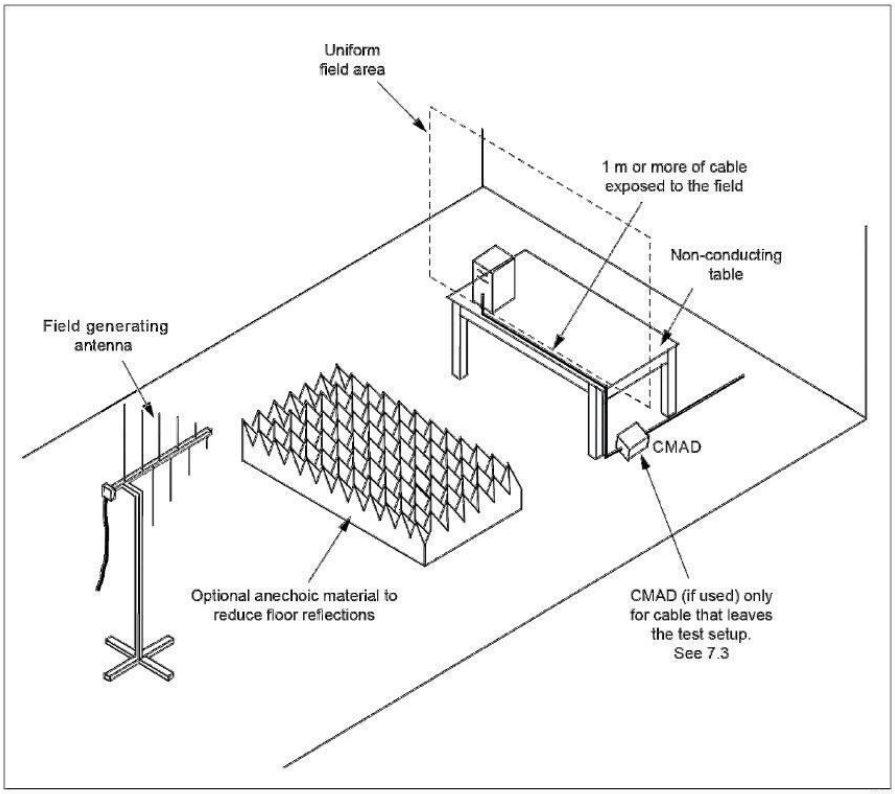

5.2.3 Summary of Test Results

Frequency	Field Strength (V/m)	EUT face	Antenna Polaxis	Result/ Observations
80MHz-1GHz	10	Front	Horizontal, Vertical	A
80MHz-1GHz	10	Back	Horizontal, Vertical	A
80MHz-1GHz	10	Left	Horizontal, Vertical	A
80MHz-1GHz	10	Right	Horizontal, Vertical	A
1800MHz	10	Front	Horizontal, Vertical	A
1800MHz	10	Back	Horizontal, Vertical	A
1800MHz	10	Left	Horizontal, Vertical	A
1800MHz	10	Right	Horizontal, Vertical	A
2600MHz	10	Front	Horizontal, Vertical	A
2600MHz	10	Back	Horizontal, Vertical	A
2600MHz	10	Left	Horizontal, Vertical	A
2600MHz	10	Right	Horizontal, Vertical	A
3500MHz	10	Front	Horizontal, Vertical	A
3500MHz	10	Back	Horizontal, Vertical	A
3500MHz	10	Left	Horizontal, Vertical	A
3500MHz	10	Right	Horizontal, Vertical	A
5000MHz	10	Front	Horizontal, Vertical	A
5000MHz	10	Back	Horizontal, Vertical	A
5000MHz	10	Left	Horizontal, Vertical	A
5000MHz	10	Right	Horizontal, Vertical	A

A: No degradation in the performance of the EUT was observed.

5.3 Electrical fast transients / burst for AC mains power ports

Test Requirement:	1kV; 5/50ns Tr/Th; 5kHz Repetition Frequency
Test Method:	EN 61000-4-4: 2012
Procedure:	Repetition Frequency: 5kHz Burst Period: 300ms Test Duration: 2 minute per level & polarity
Performance Criteria:	B

5.3.1 E.U.T. Operation

Environmental Conditions	
Temperature:	23.5 °C
Relative Humidity:	52 %
Atmospheric Pressure:	998 mbar
Test mode:	TM1, TM2

5.3.2 Basic Test Setup Block Diagram

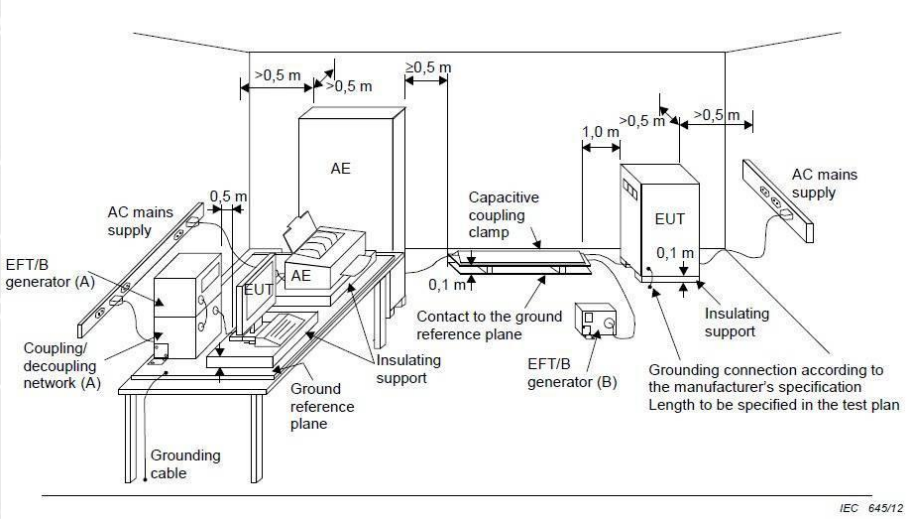

5.3.3 Summary of Test Results

Port	Votl (kV)	Polarity	CDN/ Clamp	Result/ Observations
AC power port	1	+	CDN	A
AC power port	1	-	CDN	A

A: No degradation in the performance of the EUT was observed.

5.4 Surges for AC mains power ports

Test Requirement:	1.2/50μs Tr/Td; 1kV Line to Line
Test Method:	EN 61000-4-5: 2014 +A1: 2017
Procedure:	Interval: 60s between each surge No. of surges: 5 positive, 5 negative at 90°, 270°
Performance Criteria:	B

5.4.1 E.U.T. Operation

Environmental Conditions	
Temperature:	22.5 °C
Relative Humidity:	54 %
Atmospheric Pressure:	998 mbar
Test mode:	TM1, TM2

5.4.2 Basic Test Setup Block Diagram

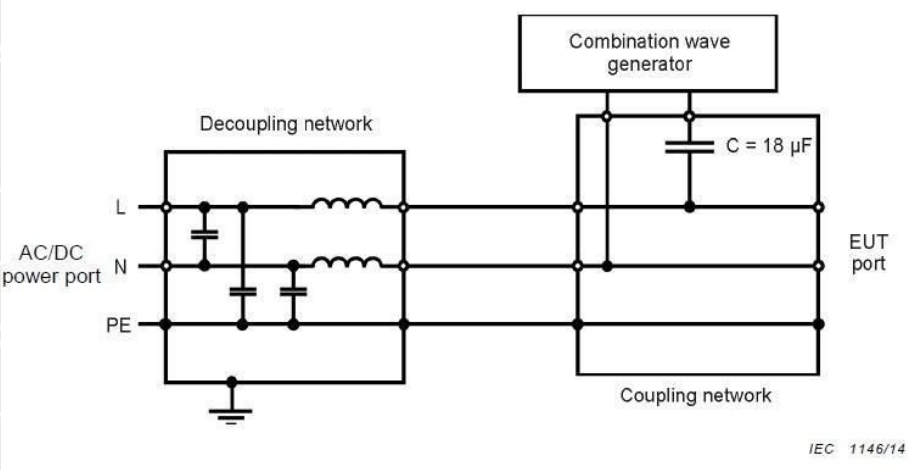

5.4.3 Summary of Test Results

Port	Votl (kV)	Polarity	Phase(degree)	Result/ Observations
L-N	1	+	90°	A
L-N	1	-	270°	A

A: No degradation in the performance of the EUT was observed.

5.5 Continuous induced RF disturbances for AC mains power ports (150kHz-80MHz)

Test Requirement:	0.15-80MHz 10Vrms(emf),
Test Method:	EN 61000-4-6: 2014
Procedure:	Frequency Range: 0.15MHz to 80MHz Modulation: 80%, 1kHz Amplitude Modulation Step Size: 1%
Performance Criteria:	A

5.5.1 E.U.T. Operation

Environmental Conditions	
Temperature:	23.5 °C
Relative Humidity:	53 %
Atmospheric Pressure:	998 mbar
Test mode:	TM1, TM2

5.5.2 Basic Test Setup Block Diagram

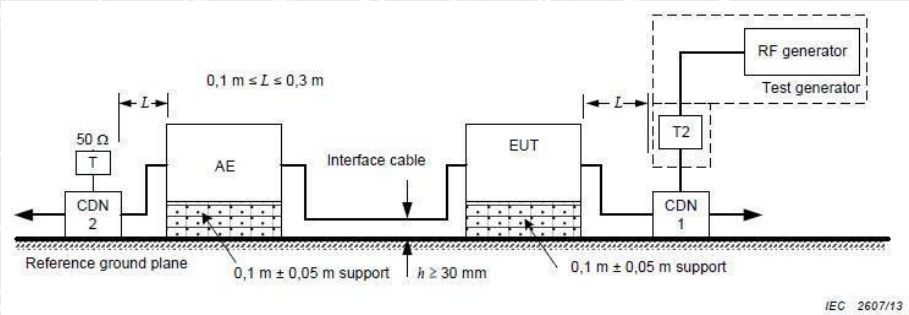

5.5.3 Summary of Test Results

Port	Strength (Vrms)	CDN/Clamp	Dwell time	Result/ Observations
AC power port	1V(0.15MHz-80MHz)	CDN	1s	/
AC power port	3V(0.15MHz-80MHz)	CDN	1s	/
AC power port	10V(0.15MHz-80MHz)	CDN	1s	A

A: No degradation in the performance of the EUT was observed.

5.6 Power frequency magnetic field

Test Requirement:	50 or 60Hz, 1 A/m
Test Method:	EN 61000-4-8: 2010
Procedure:	50 or 60Hz, 1 A/m
Performance Criteria:	A

5.6.1 E.U.T. Operation

Environmental Conditions	
Temperature:	22.5 °C
Relative Humidity:	53 %
Atmospheric Pressure:	998 mbar
Test mode:	TM1, TM2

5.6.2 Basic Test Setup Block Diagram

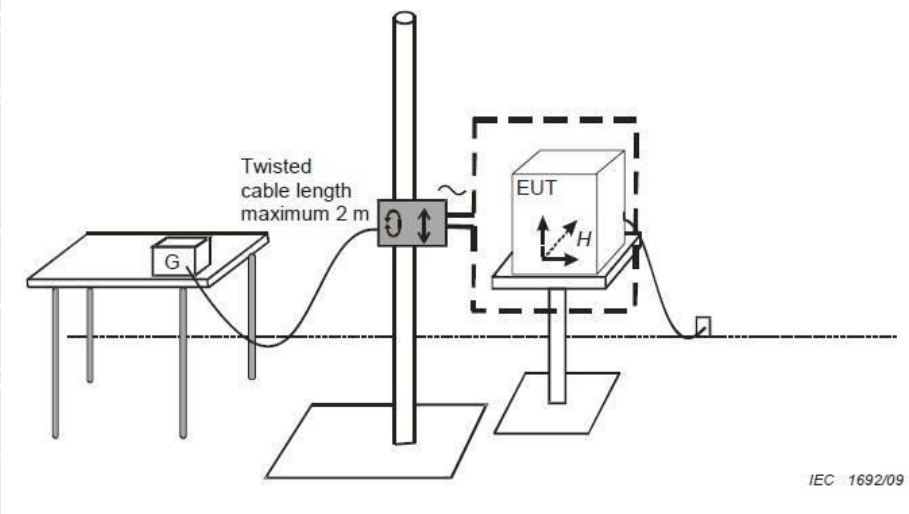

5.6.3 Summary of Test Results

Frequency	Strength (A/m)	Axial	Magnetic Field Type	Result/ Observations
50Hz/ 60Hz	1	X	Continuous filed	A
50Hz/ 60Hz	1	Y	Continuous filed	A
50Hz/ 60Hz	1	Z	Continuous filed	A

A: No degradation in the performance of the EUT was observed.

5.7 Voltage dips and interruptions

Test Requirement:	<5% residual voltage for 0.5 periods 70% residual voltage for 25 periods <5% residual voltage for 250 periods
Test Method:	EN IEC 61000-4-11:2020
Procedure:	<5% residual voltage for 0.5 period 70% residual voltage for 25 period <5% residual voltage for 250 period No. of Dips / Interruptions: 3 per Level Time between dropout: 10s
Performance Criteria:	B, C

5.7.1 E.U.T. Operation

Environmental Conditions	
Temperature:	23.5 °C
Relative Humidity:	54 %
Atmospheric Pressure:	998 mbar
Test mode:	TM1, TM2

5.7.2 Basic Test Setup Block Diagram

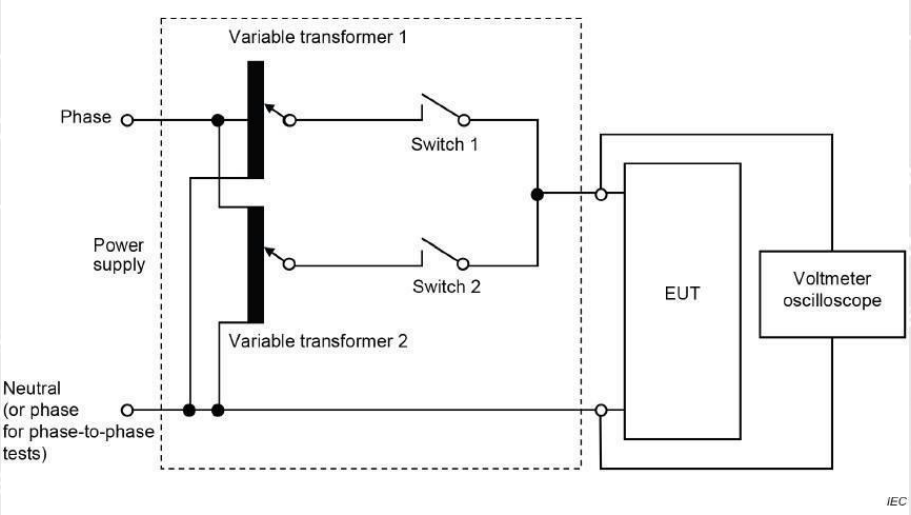

5.7.3 Summary of Test Results

Level %UT	Phase (degree)	Duration	No. of Dips/ Interruptions	Result/ Observations
0	0°	0.5 Cycles	3	A
0	0°	250 Cycles	3	B
70	0°	25 Cycles	3	B

A: No degradation in the performance of the EUT was observed.

6. EXHIBIT 1 - PRODUCT LABELING

6.1 Proposed Label Format

ICT/ITE POWER SUPPLY
Model: GT-43001130505
Brand: GlobTek, Inc.
Importer Name: XXX
Importer Address: XXX
1: GlobTek, Inc.2: GlobTek (Suzhou) Co., Ltd
1: 186 Veterans Dr. Northvale, NJ 07647 USA
2: Building 4, No. 76, Jin Ling East Rd., Suzhou Industrial Park, Suzhou, JiangSu 215021, China

Specifications: Text is Black in color and is justified. Labels are printed in indelible ink on permanent adhesive backing or silk-screened onto the EUT or shall be affixed at a conspicuous location on the EUT. The 'CE' marking must be affixed to the EUT or to its data plate. Where this is not possible or not warranted on account of the nature of the apparatus, it must be affixed to the packaging, if any, and to the accompanying documents. The 'CE' marking must have a height of at least 5 mm. If the 'CE' marking is reduced or enlarged the proportions given in the above graduated drawing must be respected. The Importer name, address and Manufacturer name and address should indicate on marking label or packaging or in a document accompanying.

6.2 Proposed Label Location of EUT

Label Location	Label Location 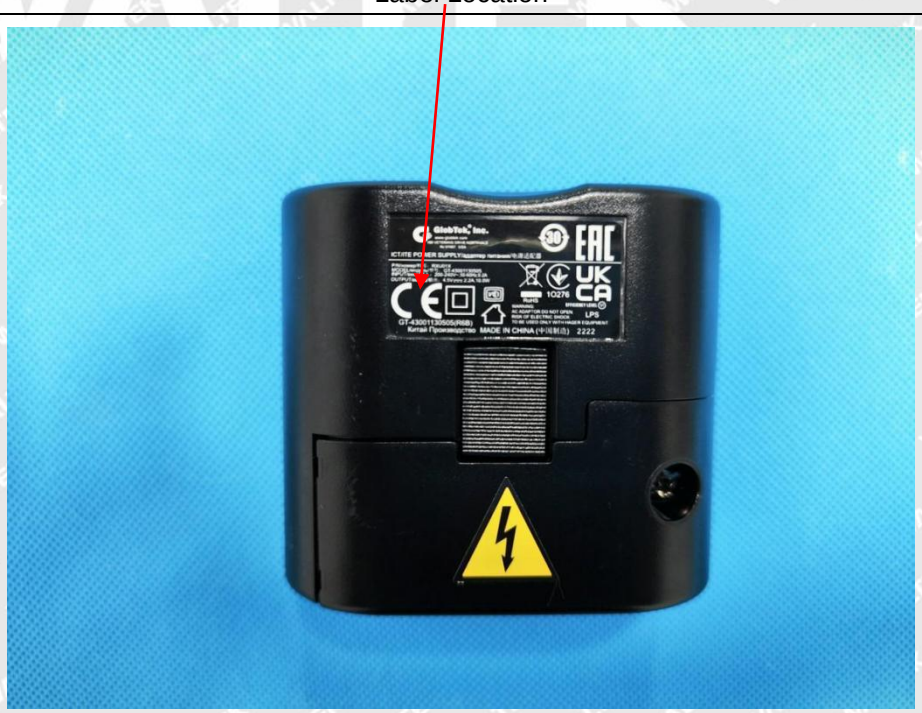

7. EXHIBIT 2 - EUT PHOTOGRAPHS

External

TM1

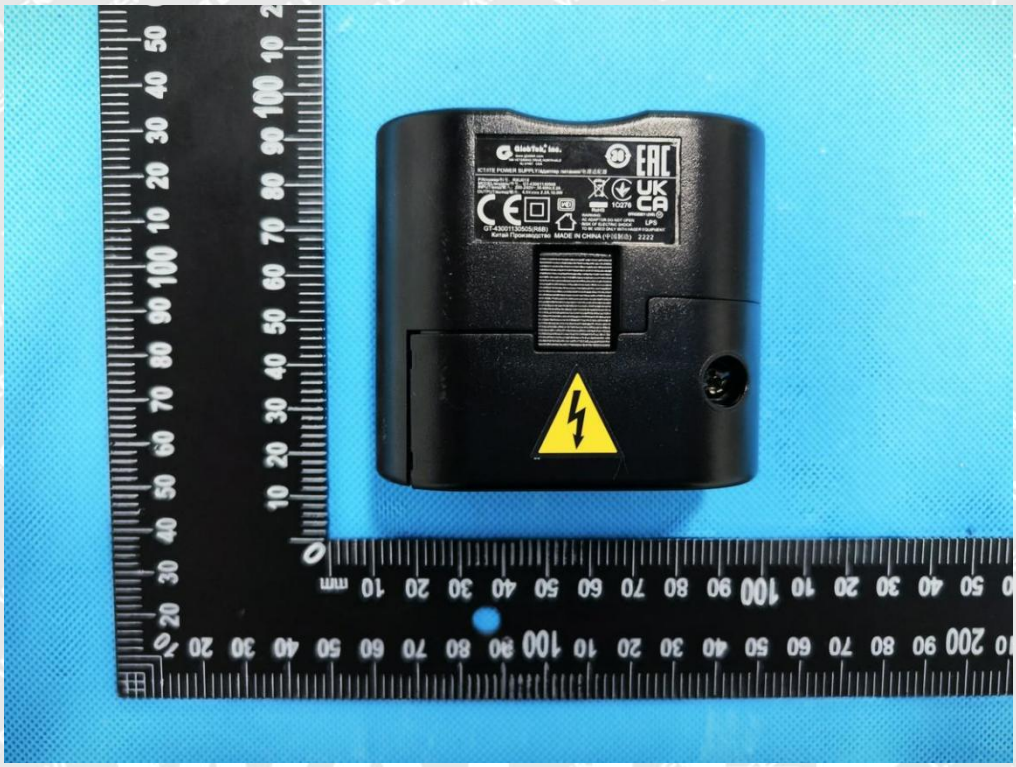

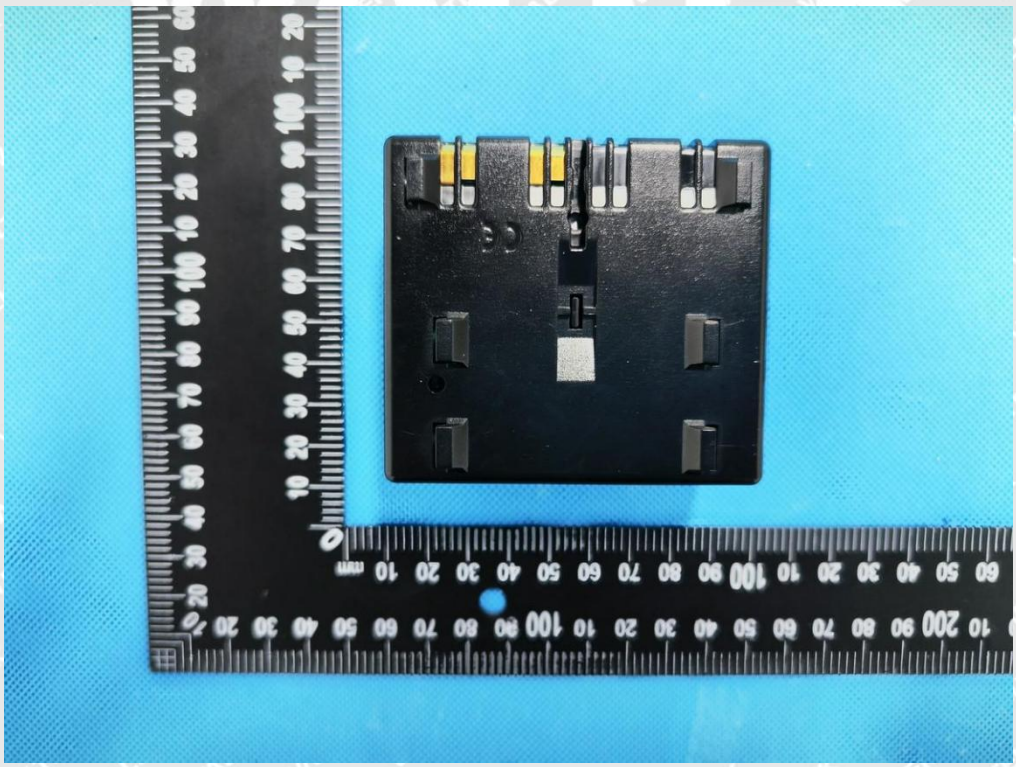

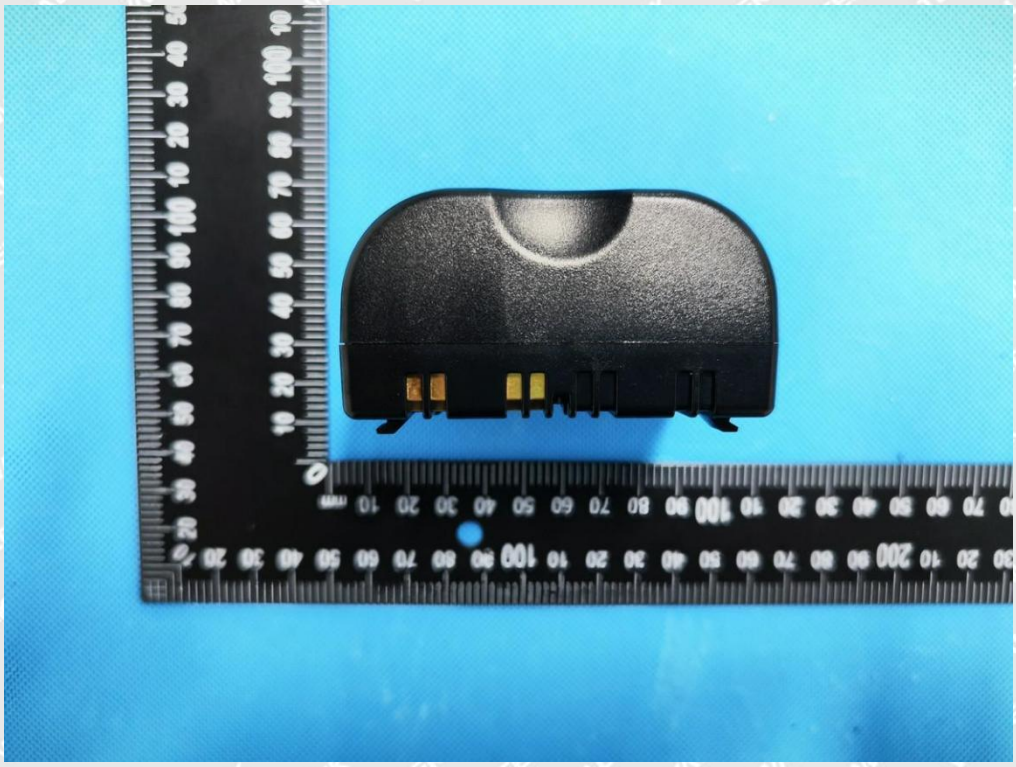

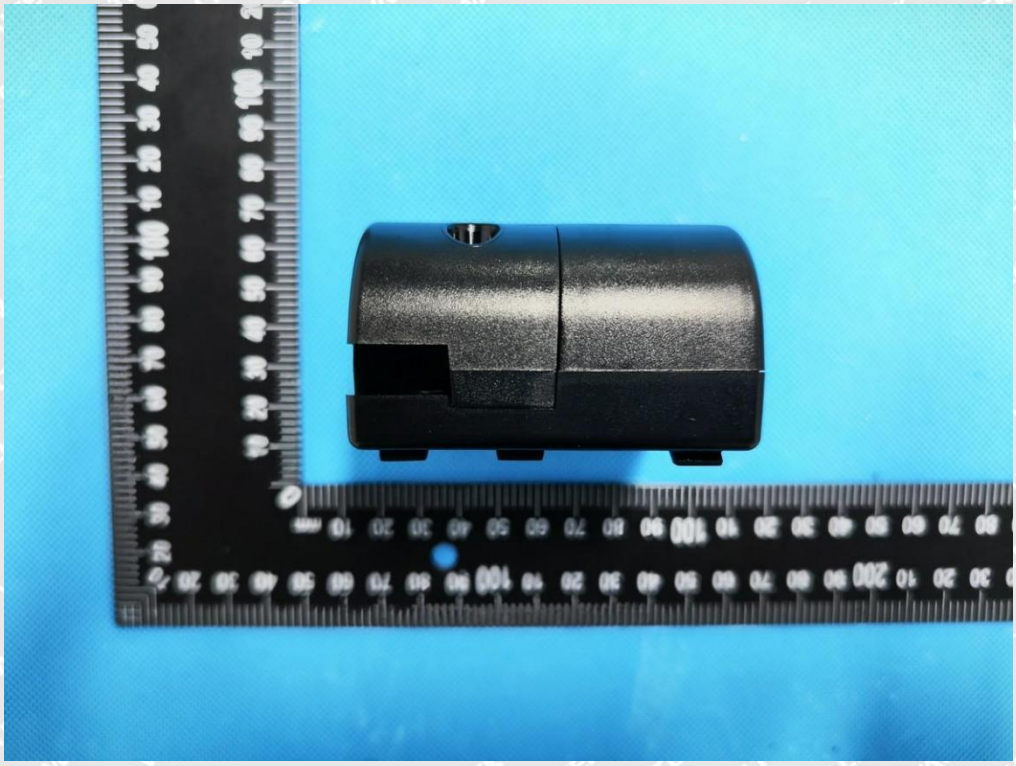

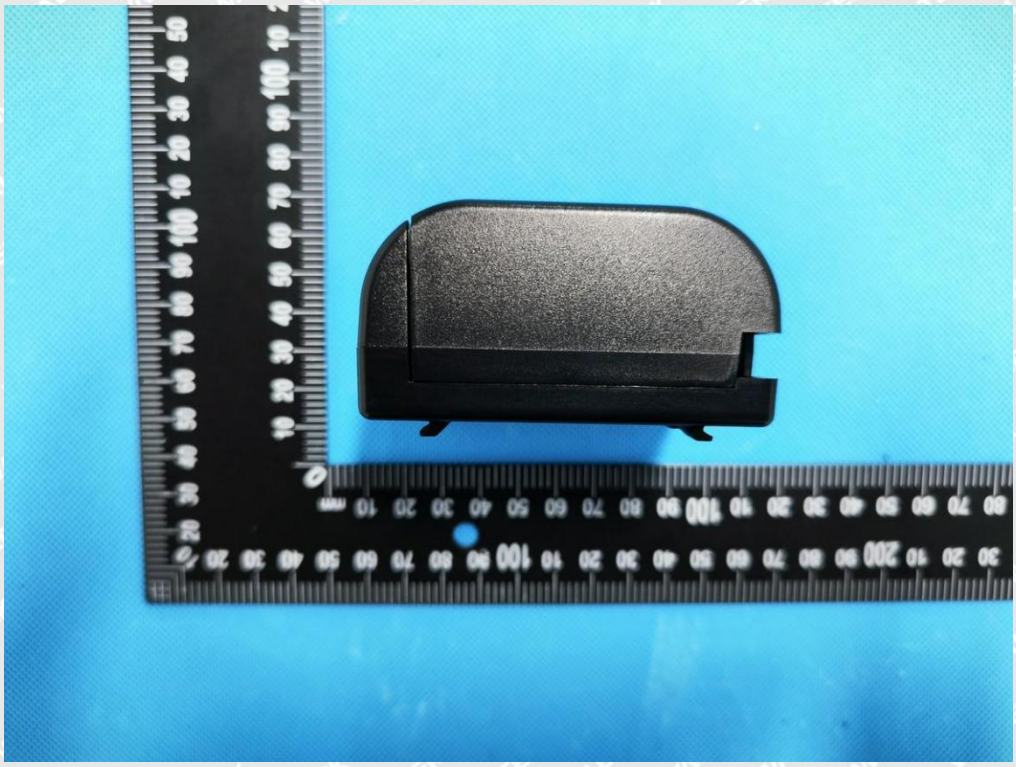

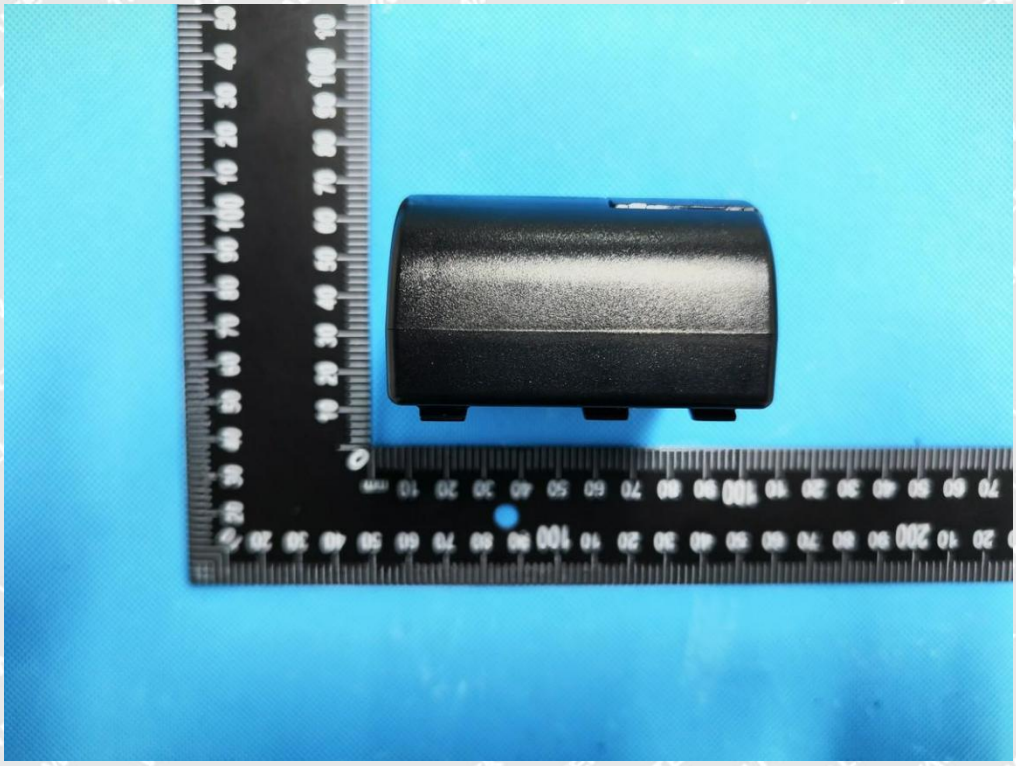

TM2

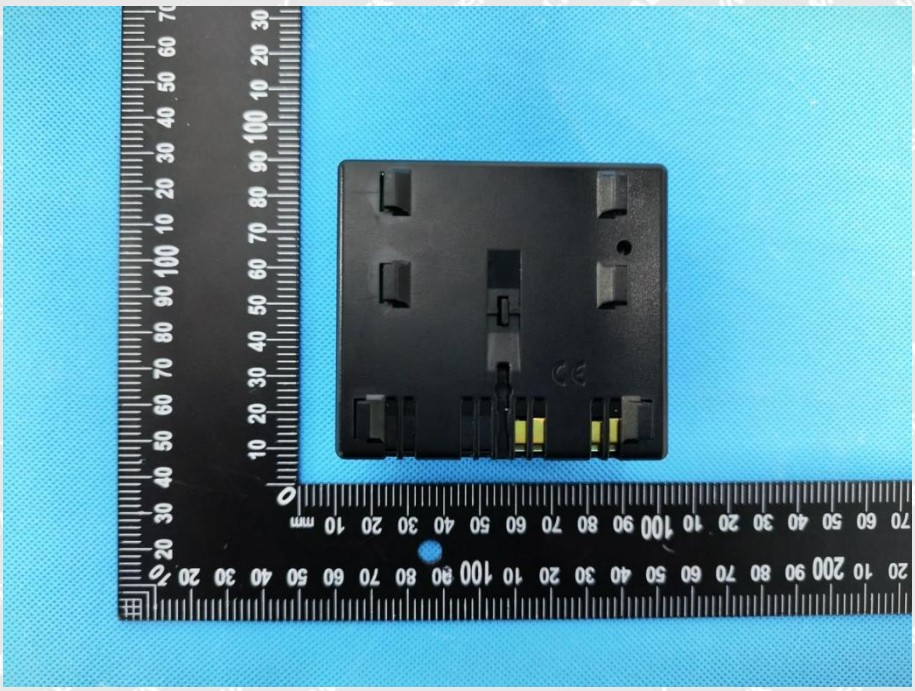

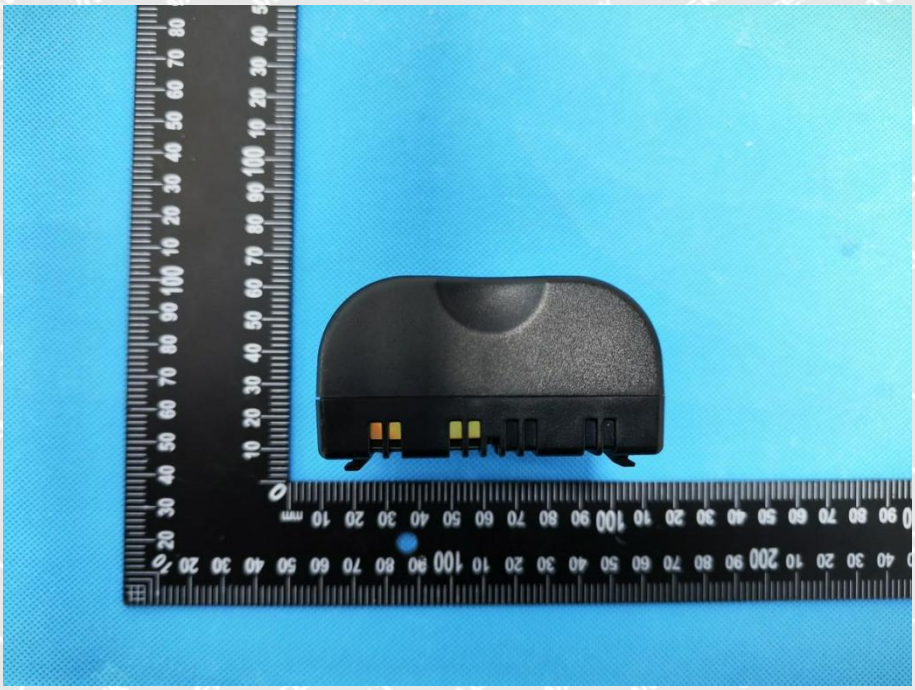

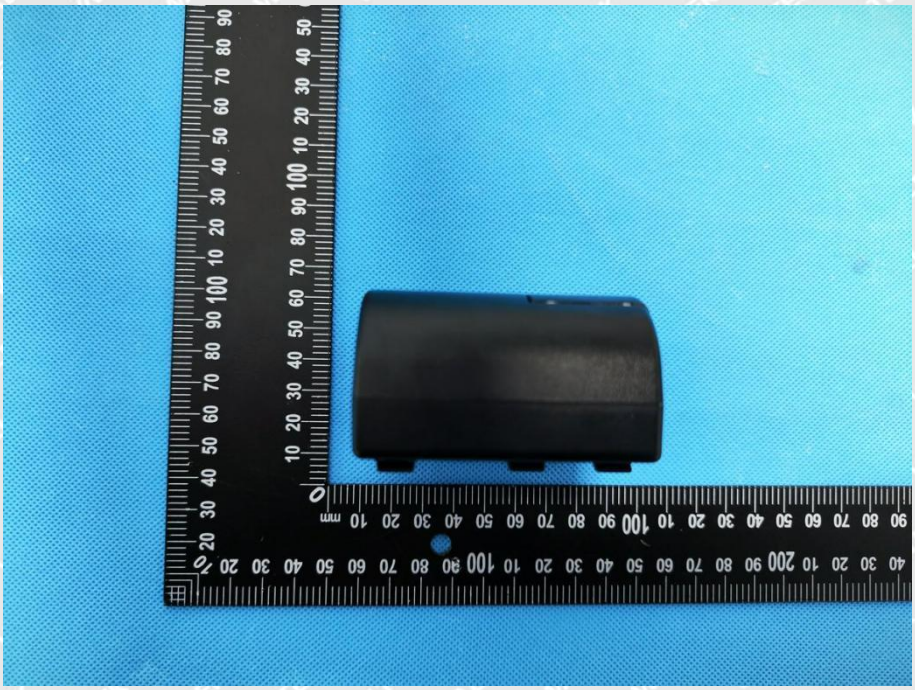

Internal

TM1

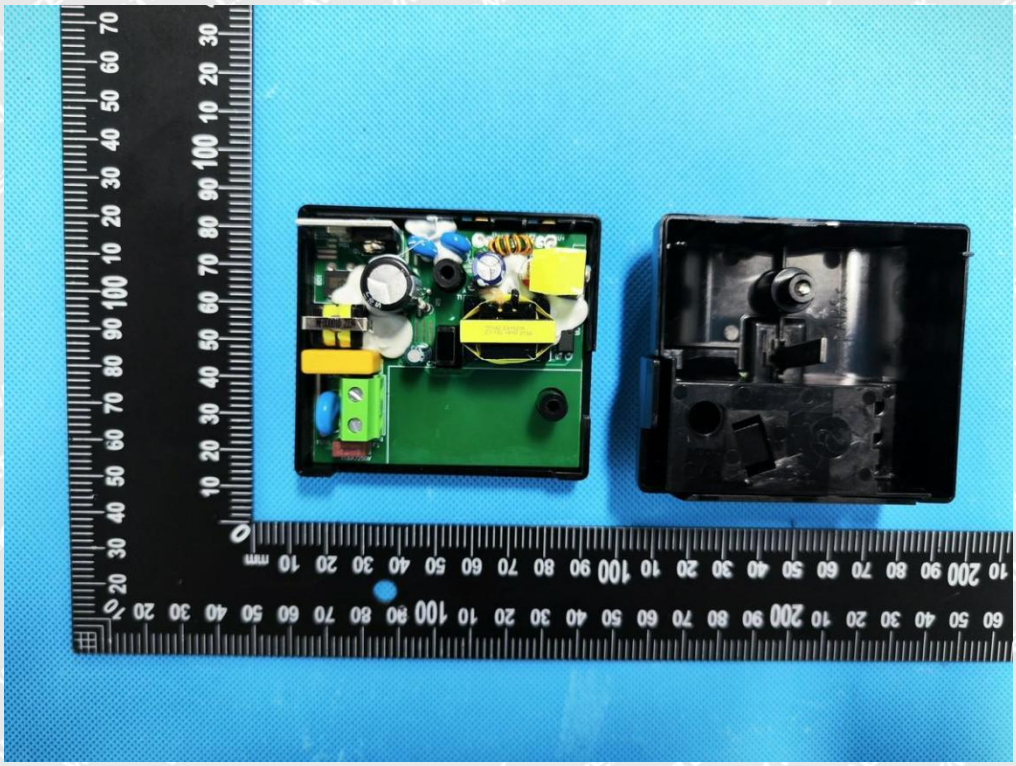

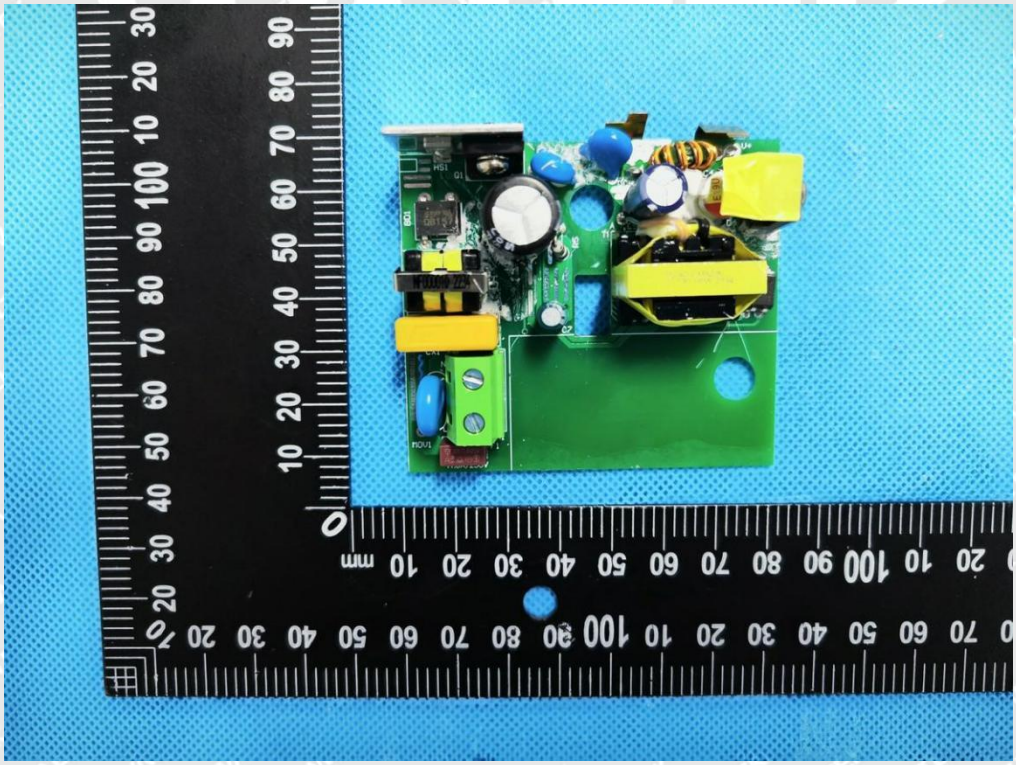

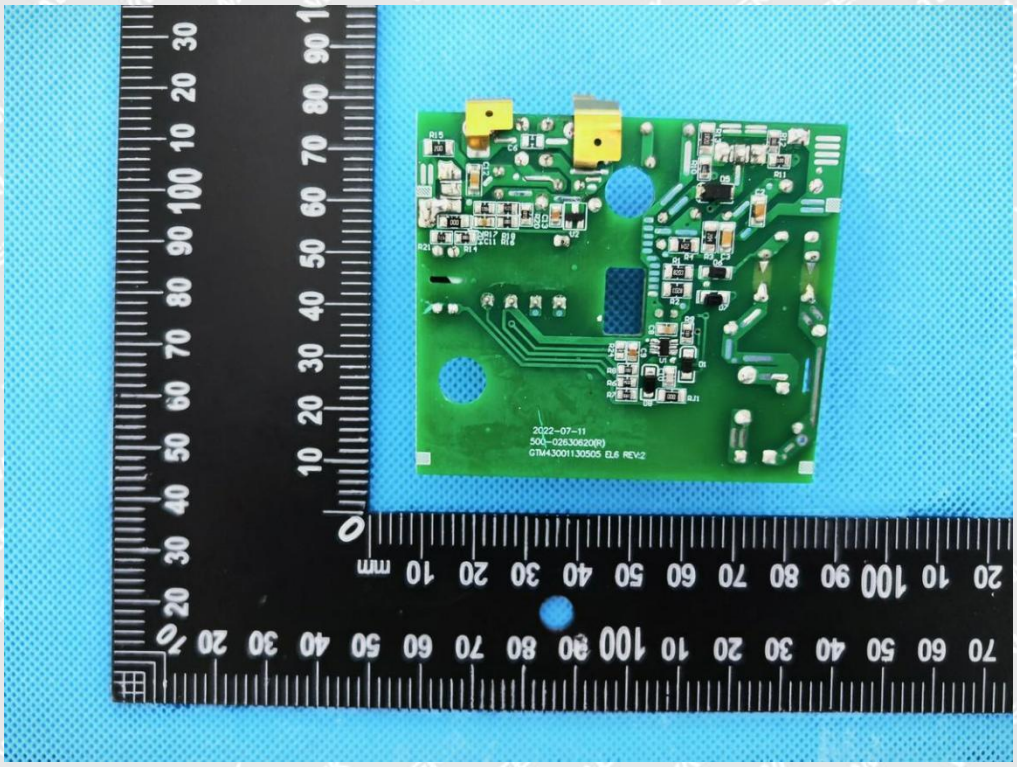

TM2

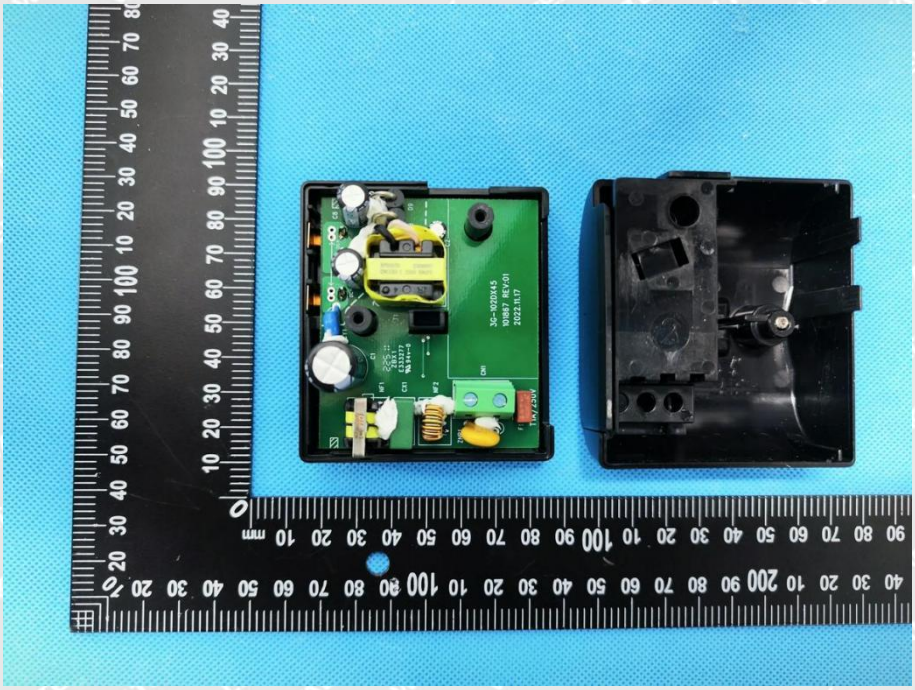

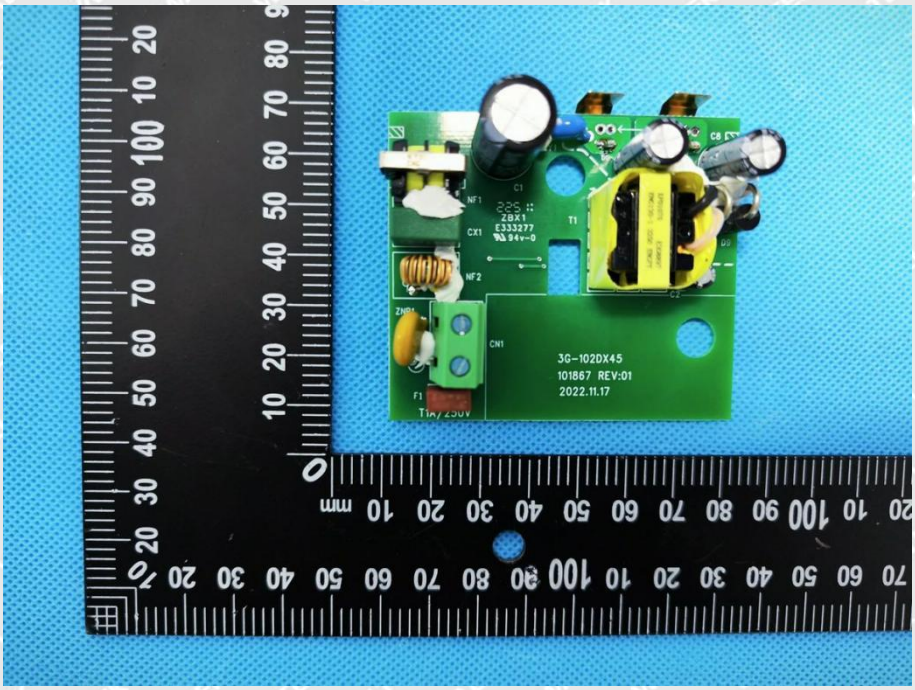
3G-102DX45
101867 REV:01
2022.11.17

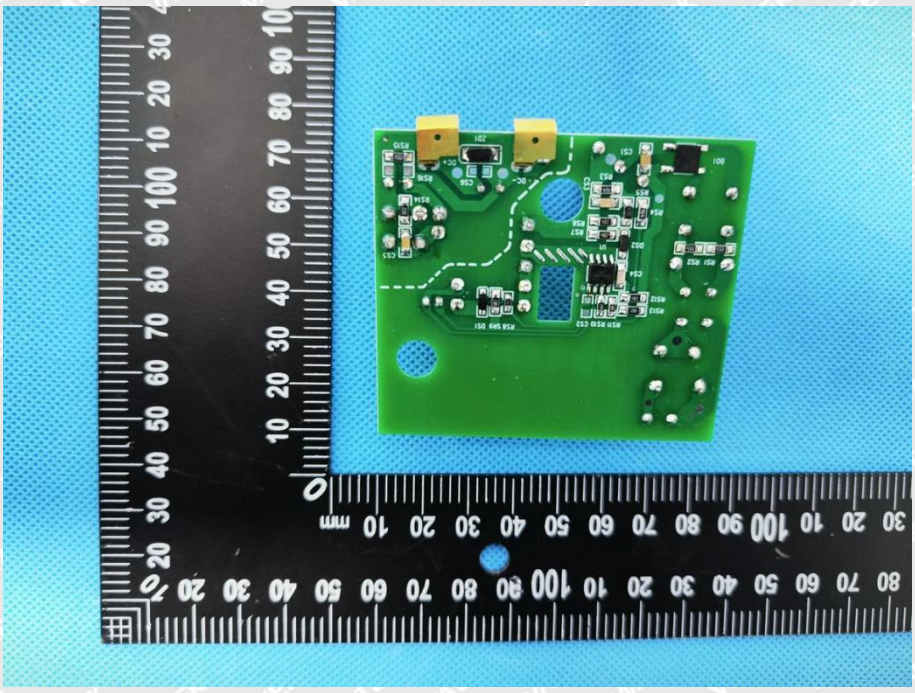

8. EXHIBIT 3 - TEST SETUP PHOTOGRAPHS

Conducted emissions from AC mains power ports (150kHz-30MHz)

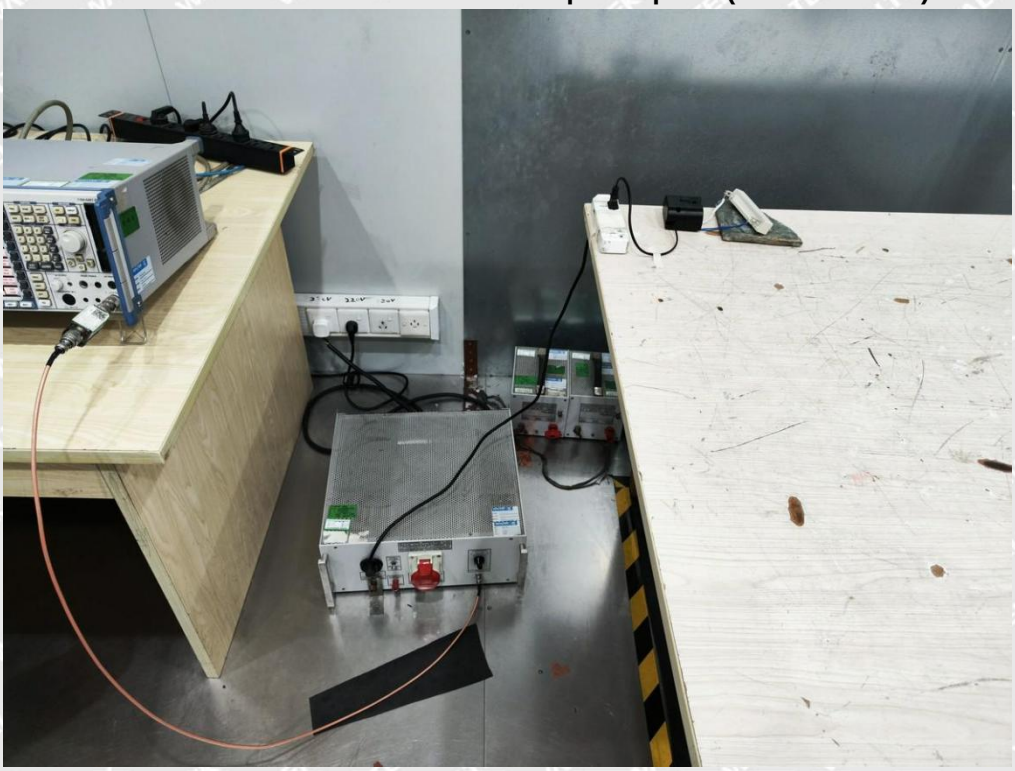

Radiated emissions (30MHz-1GHz)

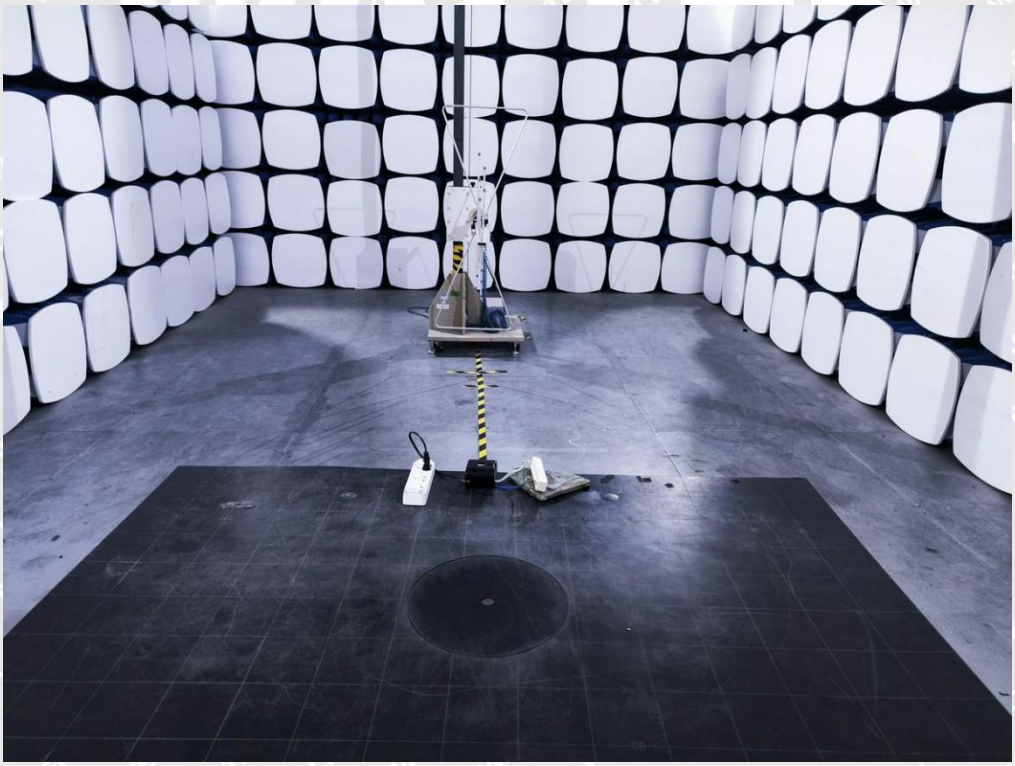

Harmonic current emission
Voltage fluctuations and flicker

Electrostatic discharges

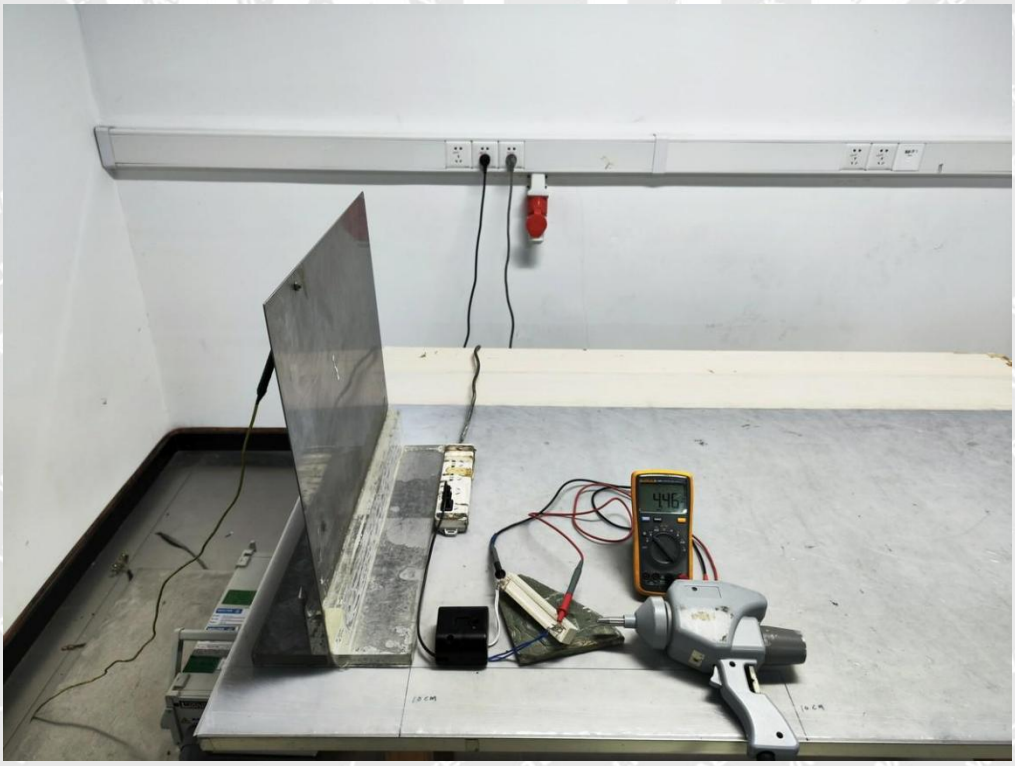

RF electromagnetic field disturbances

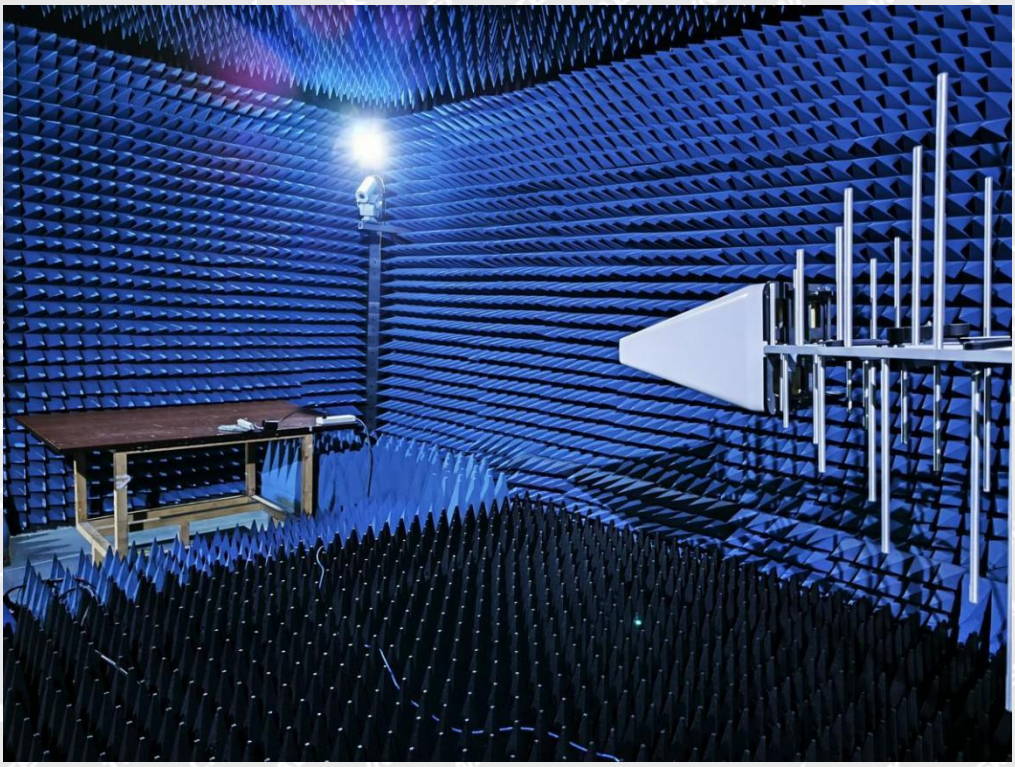

Electrical fast transients / burst for AC mains power ports
Surges for AC mains power ports
Voltage dips and interruptions

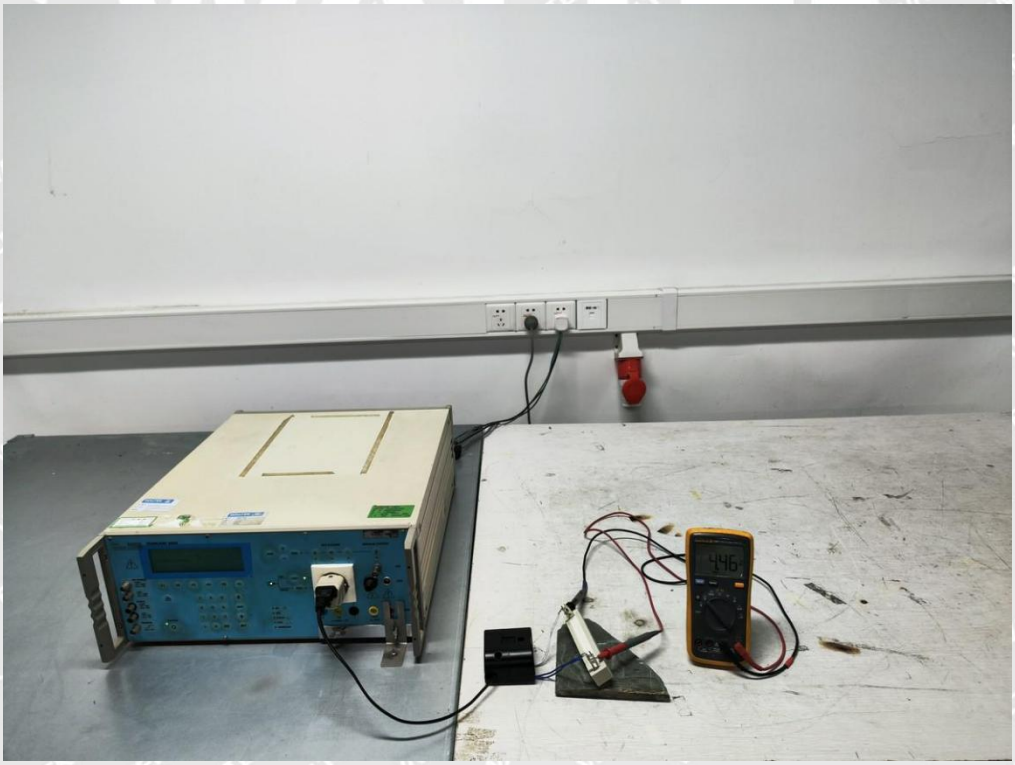

Continuous induced RF disturbances for AC mains power ports (150kHz-80MHz)

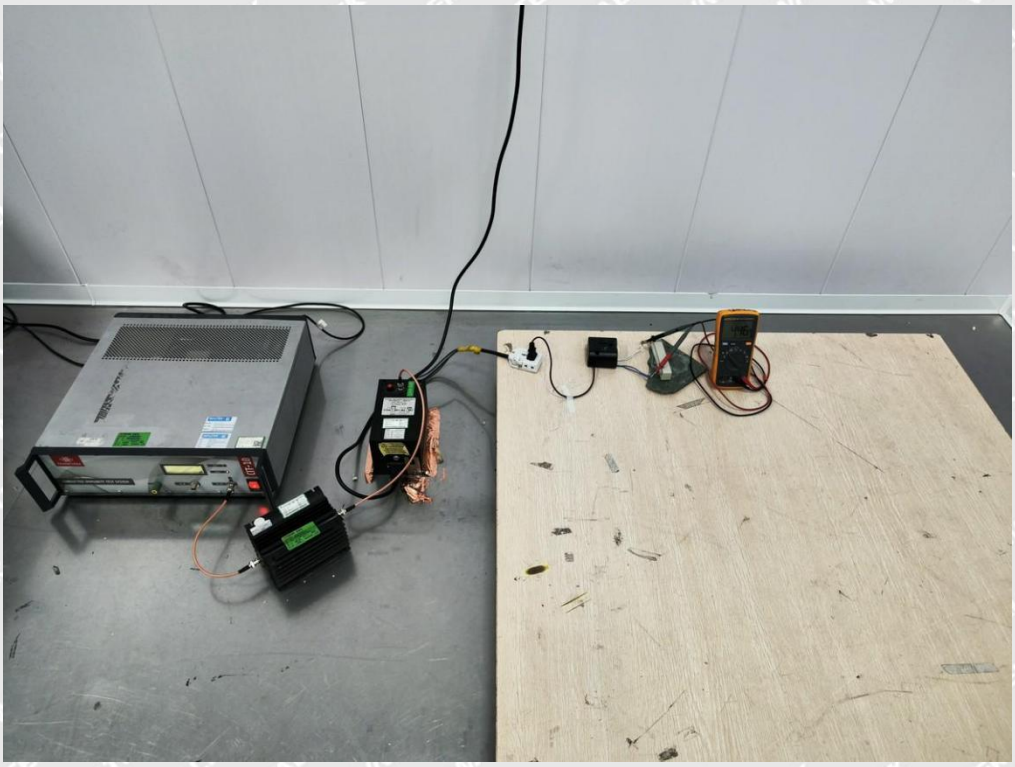

Power frequency magnetic field

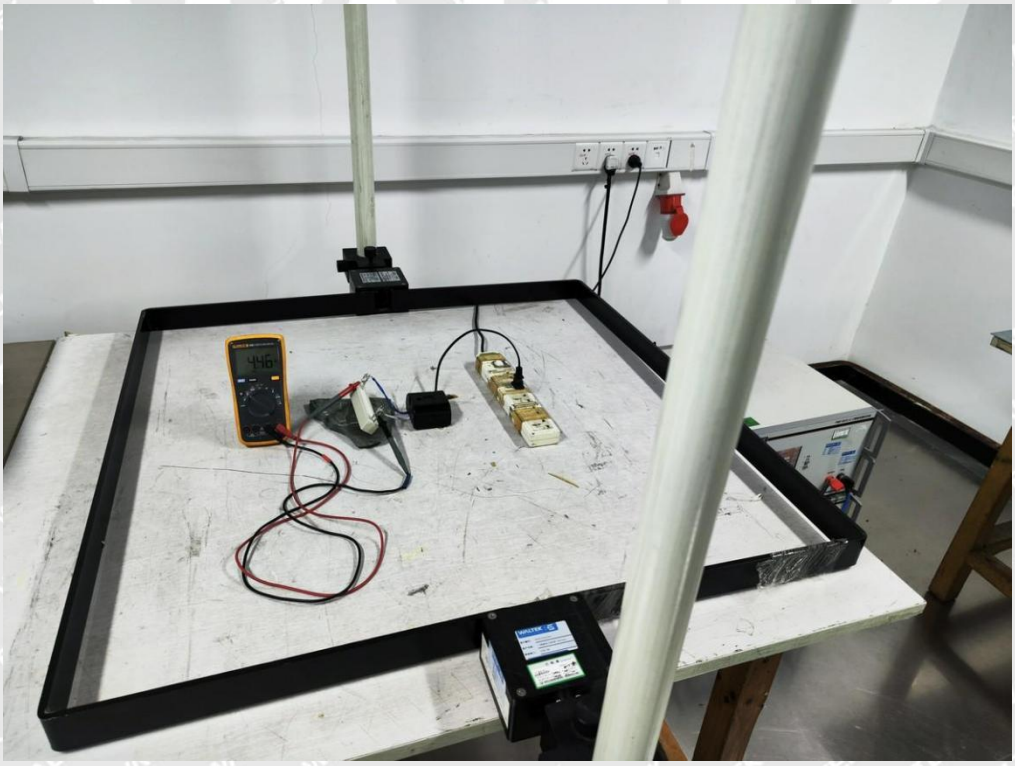

******* END OF REPORT *******